VTrans Field Welding Manual
March 1st 2020

Table of Contents

Introduction & Purpose 2

General information
- Applicable codes 2
- Welding processes 2
- Cutting processes 5
- Weld types 7
- Weld Positions 9
- Weld Symbols 9

Definitions of Common Welding Terms 11

Classification of Field Welds (Level 1, 2, 3) 13

Welder Certification Requirements 13

WPS Requirements 14

Steel Classification 14

Electrode Classification 15

Electrode Selection and Requirements 15

Joint & surface preparation, preheat, climate restrictions 16

Common Defects 17

Pile tip detail 18

Pile Splice detail 19

Contacts 20

Pre-Qualification process for field welding 21

Blank WPS Form 23

Photo Examples (Acceptable)..... 24

Photo Examples (Unacceptable)..... 26

Introduction and Purpose

The purpose of this field manual is to provide introductory knowledge of welding processes, positions, types, and defects. It is also the intent to provide basic understanding of concepts, specifications, classifications, and selected code requirements. Quality field welds are of the upmost importance for the safety of construction personnel who are working on or around weldments, as well as for the longevity of the structure. There are many factors that can contribute to the quality of a weld and therefore it is critical that care and caution is always used in the field to minimize the negative effects of these.

General information

Applicable codes:

ANSI/AWS D1.1 Structural Welding Code – Steel
ANSI/AWS D1.2 Structural Welding Code – Aluminum
ANSI/AWS D1.3 Structural Welding Code – Sheet Steel
ANSI/AWS D1.4 Structural Welding Code – Reinforcing Steel
ANSI/AWS D1.5 Bridge Welding Code
ANSI/AWS D1.6 Structural Welding Code – Stainless Steel
ANSI/AWS D1.7 Guide for Strengthening and repairing Existing Structures

Welding Processes:

SMAW – Shielded Metal Arc Welding (also referred to as stick welding). SMAW electrodes have a core of filler metal that is surrounded with flux. As the electrode melts, the flux off gases to protect the weld puddle (molten metal) and leaves behind a layer on top of the weld called slag. The slag is a byproduct that protects the weld from contaminates while it cools and must be removed after each weld pass. This is the only process that is allowed for field welding by the Agency specifications.

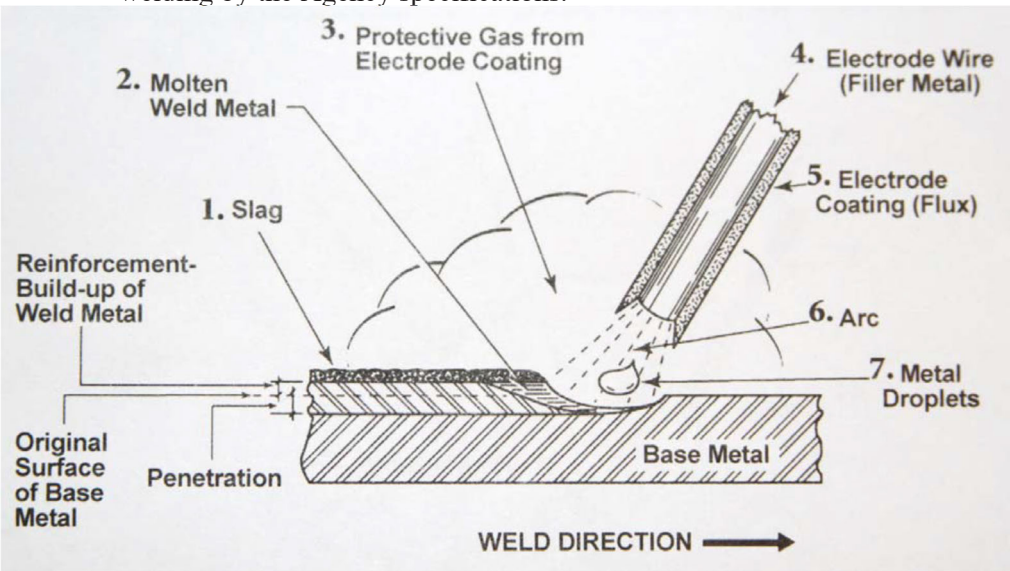

Stud Welding – This is an arc welding process which uses an automatically timed gun which controls the timing, lift and plunge. Each stud utilizes an arc shield (ferrule) which protects the weld from the atmosphere until it solidifies and cools. Once cooled, the ferrule is broken away from the stud.

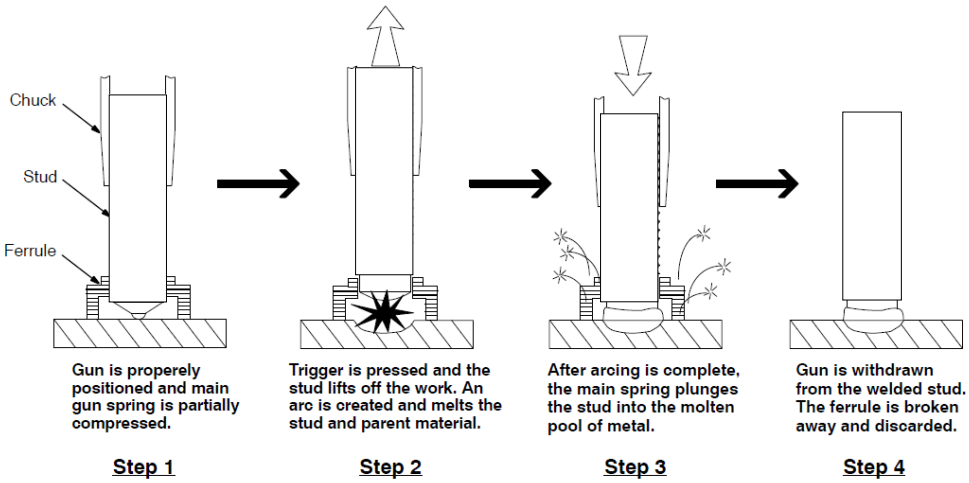

FCAW – Flux Core Arc Welding. FCAW is a wire fed process where the wire is tubular and the core is filled with flux in order to shield the weld. FCAW can be used with or without an additional shielding gas. This process is not currently allowed by specification to be used for field welding due to the effects that wind has on the shielding abilities of the flux cored electrodes. In some cases, with adequate atmospheric protection, FCAW has been allowed for certain applications only with the pre-approval of the Agency's Structural Steel Fabrication Engineer.

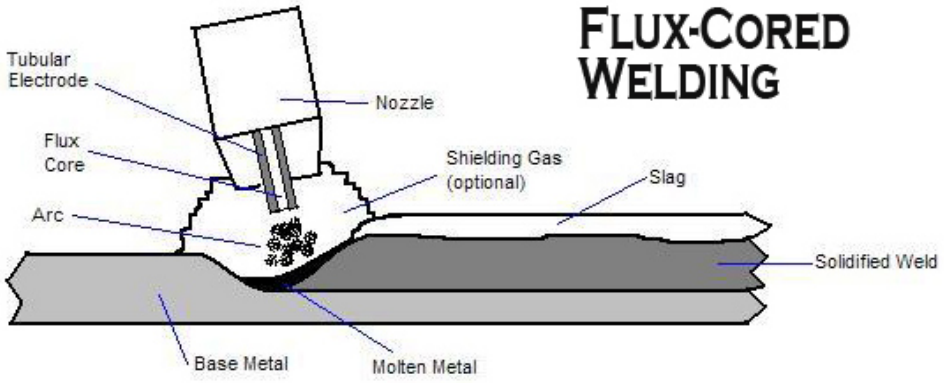

GMAW – Gas Metal Arc Welding. GMAW is similar to FCAW in that it is also a wire fed process, but it does not utilize any flux. This process relies completely on the shielding gas (which is not optional like FCAW) to protect the weld pool, which makes it not suitable for field welding because the gas can easily be blown away by wind. GMAW is sometimes used inside fabrication plants for welding bridge components but is not allowed in the field by the Agency specifications.

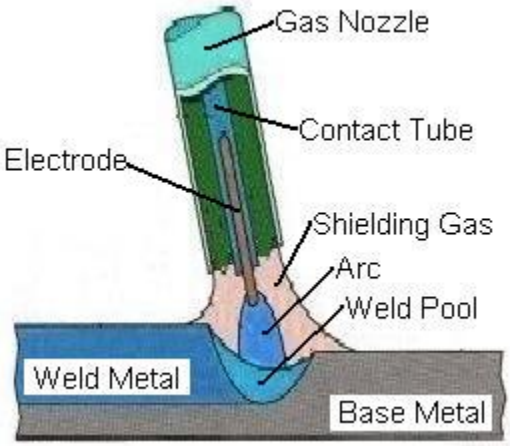

SAW – Submerged Arc Welding. SAW is an arc welding process that uses one or more arcs between a bare metal electrode (wire) and base metal. Both the arc and molten metal (weld pool) are completely covered by a layer of granular flux on the work pieces. Once the weld pool has solidified, the leftover flux can be swept off and re-used. There is a layer of slag under the loose flux that typically flakes off quite easily (unlike SMAW). It is highly unlikely to encounter this process in any field welding situation. This process is generally limited to only the flat and horizontal positions.

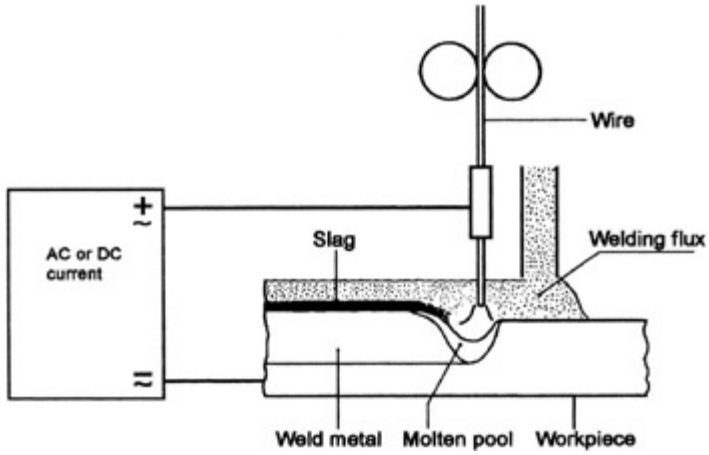

Material Cutting Processes:

Oxy-Fuel Cutting – This process is also known as oxyacetylene cutting and is only used for carbon steel. This utilizes a combination of two gases, oxygen and some type of fuel: typically, acetylene. In this process, the fuel gas is mixed with oxygen in the torch which then heats the metal to its kindling temperature (6000 ºF +/-). Then a stream of oxygen is forced through the torch tip which burns the metal into a metal oxide which flows out of the cut. Note that this is the same torch which is often used for preheating steel, except the tip is changed. The cutting tip is a very fine, concentrated flame whereas the rosebud heats a much bigger area.

Cutting Tip **Rosebud (Heating Tip)**

Plasma Cutting – This process uses compressed air and converts it to the 4th state of matter (plasma) to heat the metal to much greater temperatures than can be achieved with flame (30,000 ºF). Even though this is incredibly hot, it is also extremely concentrated and allows it to make very smooth and accurate cuts. Due to the extreme temperature and the relatively rapid cooling, plasma cutting often results in a cut edge which is very hard and can easily be above the C30 maximum reading with a Rockwell hardness tester.

Air Arc/Air Gouge – This process is not used often in the field however for weld repairs where weld metal needs to be removed or base metal needs to be removed this is sometimes used. This process requires a very experienced operator as it is quite easy to remove too much material at once. If this process is needed in the field, the Agency's Structural Steel Fabrication Engineer shall be closely involved with approved procedures and operators in place prior to commencing work.

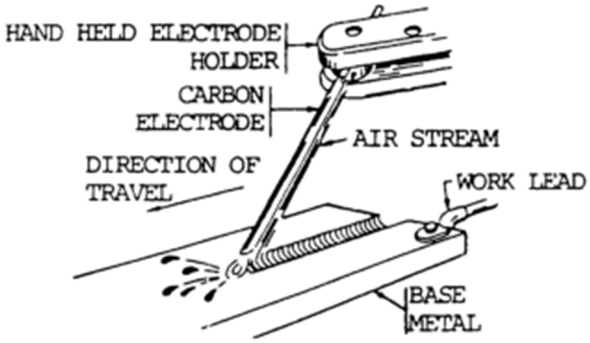

Weld Types:

Full penetration groove welds – also known as Complete Joint Penetration (CJP) welds. This type of weld utilizes either a backer bar or use of back gouging techniques to ensure that filler metal from the electrode is deposited throughout the entire cross section of the weld.

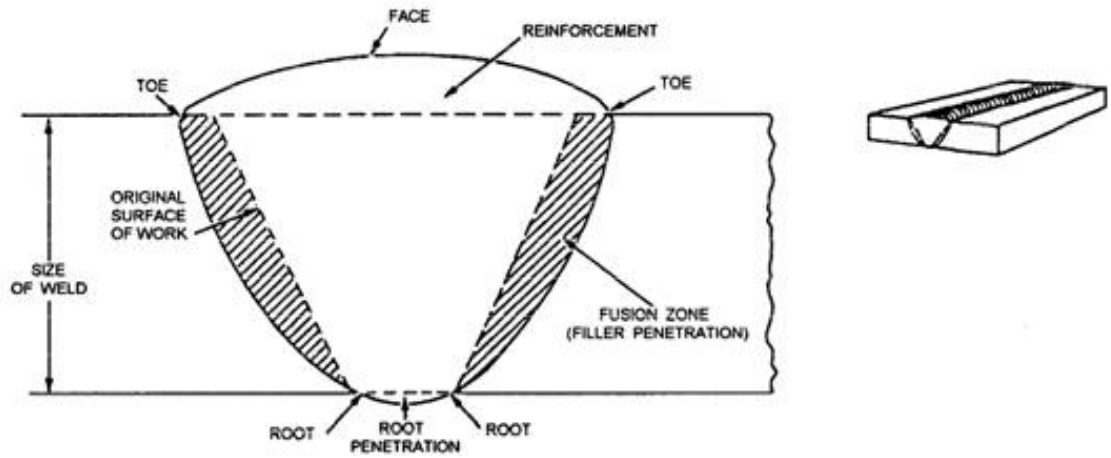

Full Penetration Groove Weld

Partial penetration groove welds – also known as partial joint penetration (PJP) welds. These welds are similar to CJP welds except that the weld metal does not fully penetrate the base metal in the sections that are being joined together. Since the weld metal is not designed to fill the entire cross-section, the use of a backer bar or back gouging is not required.

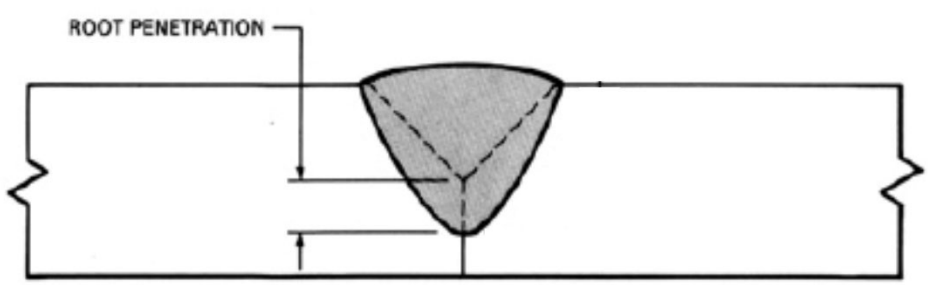

Partial Penetration Groove Weld

Fillet welds – Fillet welds are used to join sections of base metal lying in different planes from each other. The cross section of this weld is generally triangular and the face can have three types of finishes; convex, concave or flat.

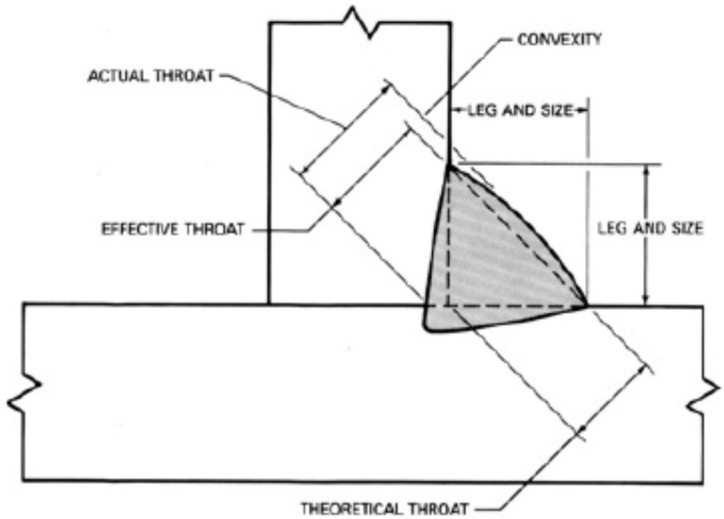

Convex Fillet Weld

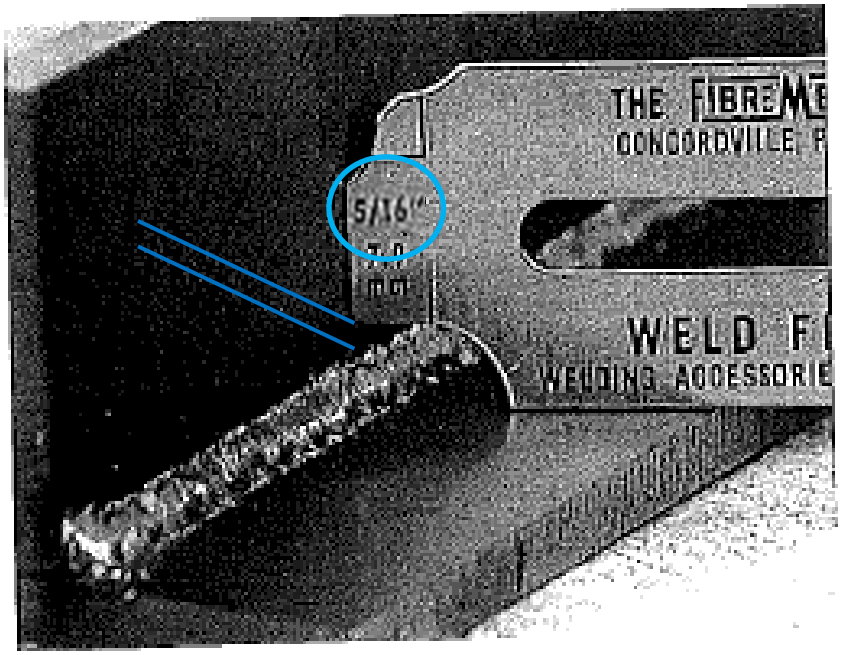

Measuring a Fillet Weld

In the Figure above, a fillet weld gauge is being used to check the size. This shows that the weld size is less than 5/16" due to the fact the gauge is not contacting the toe of the weld.

Weld Positions: Refer to the figure below for descriptions of the different positions: flat, horizontal, vertical up, vertical down, overhead.

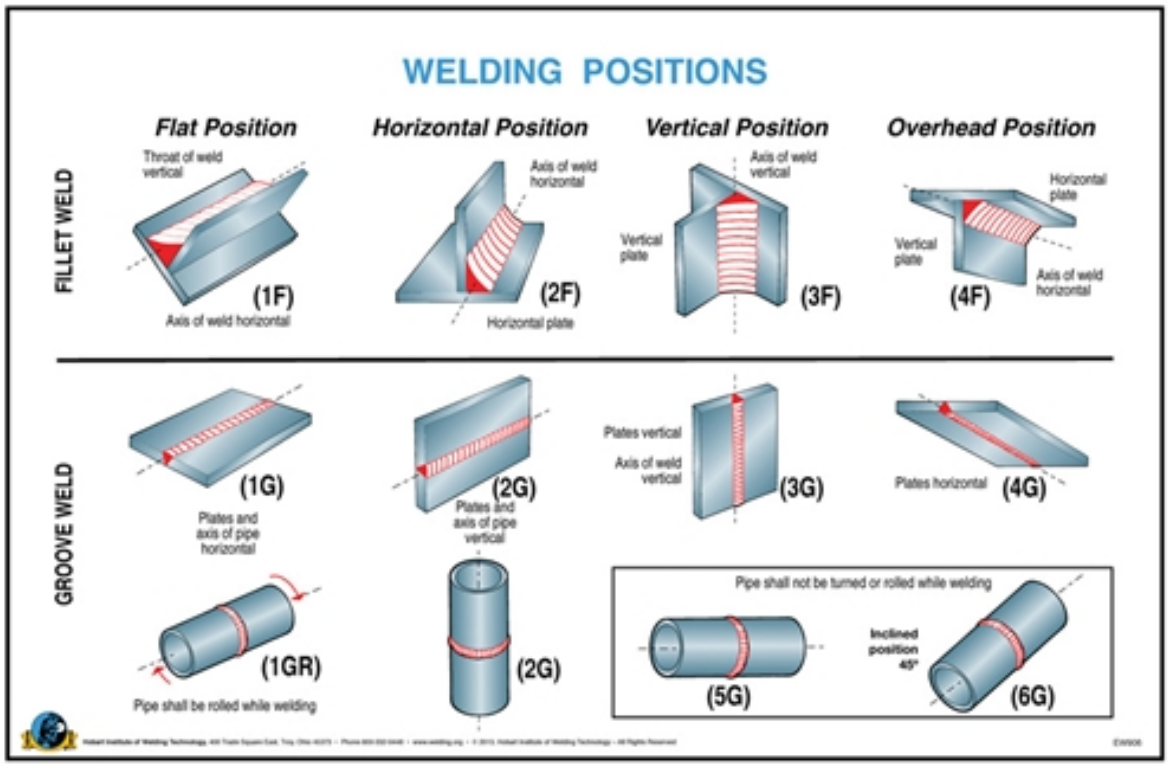

Weld Symbols: Refer to the figures below for descriptions of a few of the most common weld symbols used for Agency work.

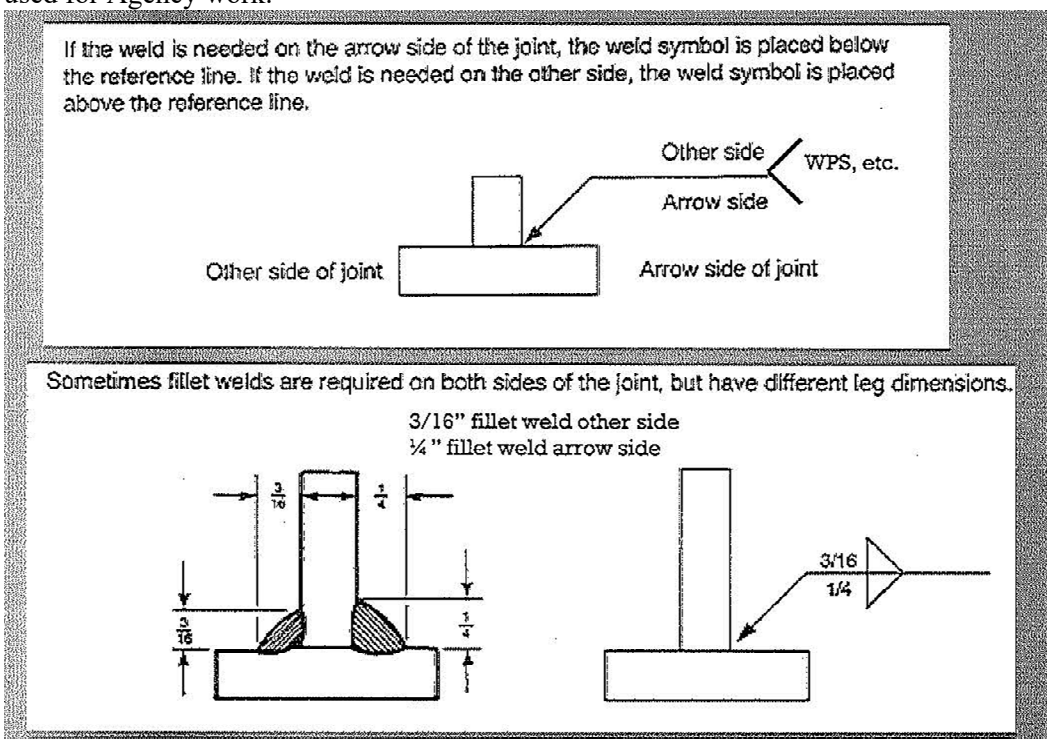

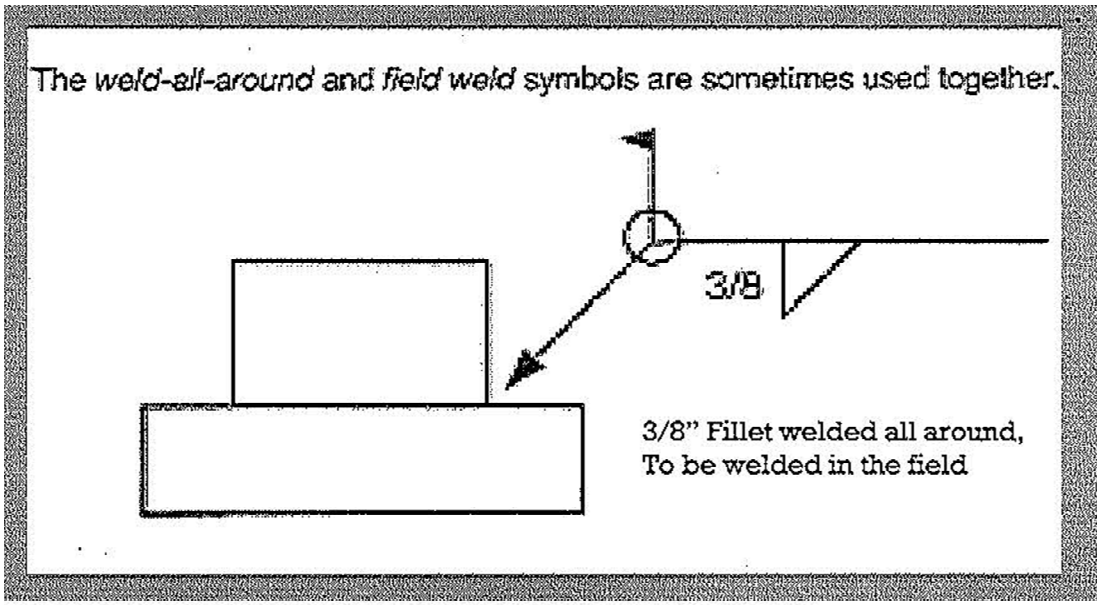
The weld-all-around and field weld symbols are sometimes used together.
3/8
3/8" Fillet welded all around,
To be welded in the field

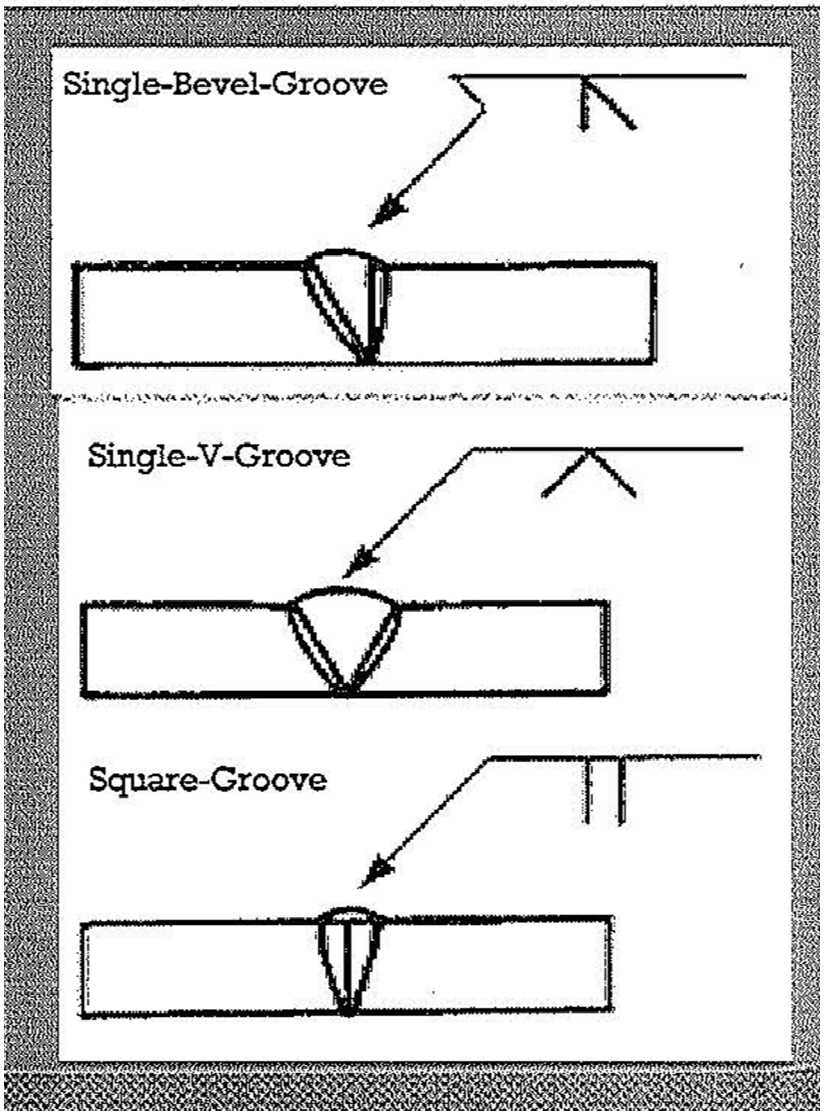
Single-Bevel-Groove
Single-V-Groove
Square-Groove

Useful Definitions and Descriptions of Welding Terms

Back Gouging – The removal of weld metal and base metal from the weld root side of a welded joint to achieve full joint penetration upon subsequent welding from that side.

Backing – A material or device placed against the back side of a joint to support and retain molten weld metal. The material may be partially fused or remain unfused during welding and may be either metal or nonmetal, as approved by the Engineer.

CJP – Complete Joint Penetration.

Concavity – The under fill (or suck back) of metal in the weld causing the weld surface to be below flush with the parent metal surfaces. This condition may exist on either root or face surfaces.

Convexity – The solidified, overfilled weld metal causing the weld surface to be above flush with the parent metal surfaces. This condition may exist on root or face surfaces and, when measured, both should be added for an accumulated effect.

CWI – Certified Welding Inspector.

Electrode oven – Also known as a hotbox. These are used to keep electrodes dry for SMAW.

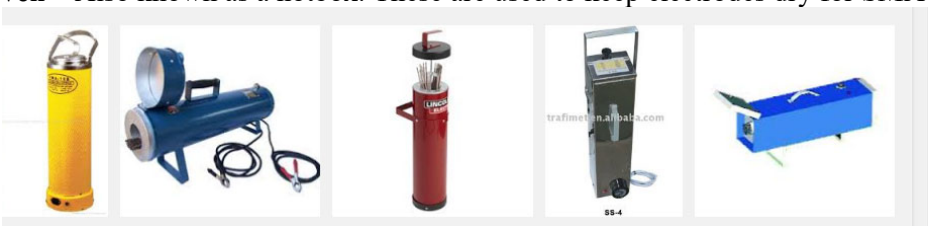

Field Welding – Any welding performed that is not done under the supervision of the fabricator's quality control management (who has an AISC Quality Certification per section 506.03 of the construction manual) shall be considered Field Welding.

Interpass Temperature – In a multi-pass weld, the temperature of the weld area between weld passes.

Joint Root – That portion of a joint to be welded where the members approach closest to each other. In cross section, the joint root may either be a point, a line, or an area.

MT – Magnetic Particle Testing.

NDE – Non-Destructive Evaluation (see page 17 for more info).

Preheat Temperature – The temperature of the base metal in the area surrounding the point of welding immediately before welding is started. In a multiple-pass weld, it is also the temperature immediately before the second and subsequent passes are started. This is a minimum temperature.

PQR (procedure qualification record) – A record of welding variables used to produce an acceptable weld and the results of the tests conducted to qualify a weld procedure.

PT – Liquid Penetrant Testing (also known as dye penetrant testing).

Root Face – The portion of the groove face within the joint root.

Shop Welding – Any welding that takes place under the supervision of the fabricator's Quality Control Management, who has an AISC Quality Certification per section 506.03 of the construction manual, shall be considered Shop Welding.

Tempilstik® – A temperature indicating crayon. Each crayon is for a specific temperature where if the crayon melts when drawn on the steel, the base metal temperature is greater than that specified crayon. These are commonly used when heating a beam/girder to adjust the camber or sweep.

Tack weld – A weld made to hold parts of a weldment in proper alignment until the final welds are made.

UT – Ultrasonic Testing.

Weld Face – The exposed surface of a weld on the side from which welding was done.

Weld Pass – A single progression of welding along a joint. The result of a pass is a weld bead or layer.

Weld Reinforcement – Weld metal in excess of the quantity required to fill a joint.

Weld Root – The points, as shown in cross section, at which the root surface intersects the base metal surfaces.

Weld size (fillet weld) – For equal leg fillet welds, the leg lengths of the largest isosceles right triangle that can be inscribed within the fillet weld cross section. For unequal leg fillet welds, the leg lengths of the largest right triangle that can be inscribed within the fillet weld cross section.

Weld Toe – The junction of the weld face and the base metal.

Weldment – An assembly whose component parts are joined by welding.

Classification of Field Welds

Level 1: Level 1 includes all field welds on material that will become a part of the finished work, or on any material used in a temporary status that will support or carry any public live load (including but not limited to temporary bents, piers, and temporary bridge main load carrying members). Shear studs have exceptions to this as detailed under #4 below in the Welder Certification section.

Level 2: Level 2 includes all structural field welds (that don't meet Level 1 criteria) on temporary works (including but not limited to cofferdams, support of excavation, and ancillary welding on temporary bridges).

Level 3: Level 3 includes any ancillary welding that is not covered under Level 1 or Level 2.

Welder Certification Requirements

1) All ***Level 1*** field welds for Vermont Agency of Transportation work shall be done by the Shielded Metal Arc Welding (SMAW) process and must be performed by welders who:

a) Are currently listed on the pre-qualified welder list and qualified for the work to be performed. (See Page 22 for details)
b) Have met the requirements for the period of effectiveness in accordance with the AWS D1.5 (5.21.4) (same requirements as AWS D1.1, 4.2.3) AND has kept a documented log to support and show that these requirements have been met. All welders shall have their welding log available for review upon request on site while welding is performed. Welders shall be prepared to show government photo identification upon request by the Agency.

It shall be noted that all Level 1 field welding shall be done in accordance with AWS D1.5, unless specifically stated otherwise in the contract documents. In certain applications (such as pile splices or pile tips), this manual allows either D1.1 or D1.5 certified welders to perform the work, however the welding still shall be performed per AWS D1.5 code.

2) The quality and integrity of all ***Level 2*** field welding, will be the full responsibility of the Contractor. However, welding of this type shall be done using the SMAW process and by welders who are certified to perform the necessary welds. Welders shall be prepared to show their AWS photo certification card or their welding certification test results, and government photo identification upon request by the Agency.

3) The quality and integrity of all ***Level 3*** field welding is the full responsibility of the contractor and does not require any certifications.

4) Installation of welded stud shear connectors by an approved automatically timed process does not require welder certification. Operator qualification and application procedure approval are accepted in accordance with the requirements of AWS D1.5, Section 7.8 as well as section 508 of the VTrans Standard Specifications.

Attachment, or repair of shear connectors by the SMAW process will require AWS D1.5 Certification (as outlined in #1 above for ***Level 1*** field welds).

5) Questions concerning the responsibility or requirements for field welding should be addressed to the Agency's Structural Steel Fabrication Engineer. See Contacts on Page 21.

Welding Procedure Specification (WPS) Requirements

Welding procedures outline all of the information about the intended weld, including but not limited to material specification, welding process/position, filler metal, joint type/prep., preheat requirements, and limits of variables such as amps, volts, electrode size/diameter, etc.

WPS's shall be prepared by either the contractor or the welder, but need to be signed by the contractor as the authorizing person prior to submitting to the Agency for approval. Note that it is acceptable to not include the welder's name if it is unknown at the time the WPS is submitted, but shall state that the welder will be someone on the pre-qualified welder list who is qualified for the welding/positions being performed. Blank WPS forms can be found on page 24 of this Manual.

WPS's must be approved in advance for all ***Level 1*** field welding by the Agency's Structural Steel Fabrication Engineer. The initial review period for WPS's shall be two weeks (14 calendar days). The review period for any subsequent reviews for any WPS's that were found to be in nonconformance, shall be one week (7 calendar days). Any variations in the field that are out outside the limits specified on the WPS shall require additional procedures with approval prior to starting the welding.

Steel Classification

AASHTO	ASTM	Description
M270 Gr. 36	A709 Gr. 36	36 KSI Standard Carbon Steel
M270 Gr. 50	A709 Gr. 50	50 KSI Standard Carbon Steel
M270 Gr. 50W	A709 Gr. 50W	50 KSI Carbon Steel with weathering characteristics
M270 Gr. 70W	A709 HPS 70W	High Performance 70 KSI Carbon Steel w/weathering characteristics

Electrode Classification

E7018-H4R

E = Electrode
70 = First two digits indicate the minimum required tensile strength in ksi.
1 = The third digit indicates the position limitations:
    1 = all positions
    2 = only flat position groove welds or flat/horizontal fillet welds
8 = The fourth digit provides information on flux type and allowable current/polarity types.
    8 = Low hydrogen flux, AC or DC positive (reverse polarity) allowed
H4R = Letters/numbers after the hyphen are optional designators for additional characteristics.
    H4 = lowered limit of diffusible hydrogen content in weld deposit
    R = Moisture Resistant Coating
    J = Increased toughness (CVN) characteristics.

Electrode Selection

- Electrode classification and specification shall be listed on all WPS's. The selection of all electrodes shall be per the requirements of the AWS D1.5 Bridge Welding Code (Table 4.1 and Table 4.2) (or AWS D1.1 Structural Welding Code if applicable per project specifications). Some of the most common electrodes/base metal combinations are listed below.

- For all ***Level 1*** and ***Level 2*** field welding, electrodes shall meet or exceed the matching requirements of Table 4.1 and Table 4.2 in the AWS D1.5 Bridge Welding Code.

Common filler metal (electrode) and base metal combinations (from Table 4.1 & Table 4.2):

ASTM	Electrodes for SMAW
A709 Gr. 36	E6018, E7018, E7018-H4R
A709 Gr. 50	E7018, E7018-H4R
A709 Gr. 50W, HPS 50W	8018-C3
A709 HPS 70W	E9018M

Electrode Requirements

- Electrodes that have ever been exposed to rain/snow or not stored properly must be discarded and cannot be used for Level 1 or Level 2 work.
    - Stored in an open container inside a job box or truck utility box is considered **improperly** stored.

- Electrodes shall be pulled from a hermetically sealed container or a hot box kept at a minimum of 250º F, and are to be used within the allowable exposure limit.
    - If the temperature in the hotbox drops below 250º F for longer than the maximum exposure limit, the electrodes shall be re-dried (see below).
    - **Re-Dry Process**: Any electrodes exposed to the atmosphere for more than the allowable limit, must be re-dried according to 4.5.2.1 of the AWS D1.5 (minimum of 2 hours at 450º F to 550º F)
- Electrodes may only be re-dried one time. If the maximum allowable exposure time is then reached, they shall not be used for Vermont Agency of Transportation work.

Hermetically Sealed Containers

(Required)

NON-Hermetically Sealed Containers

(Shall not be used without following Re-dry process listed above)

Allowable atmospheric Exposure of Low-Hydrogen SMAW Electrodes (AWS D1.5 Table 4.6)

Electrode	Maximum Time*
E70XX-X	4 Hour
E80XX-X	2 Hour
E90XX-X	1 Hour

* Note that when welding steels with yield strength of 50 ksi (or less) with electrodes that have moisture resistance designator "R", the exposure time is 9 hours.

Joint & surface preparation, preheat, climate restrictions

Joint & Surface Preparation – The joint fit up and preparation shall be in accordance with the approved WPS, including (but not limited to) bevel angles, bevel depth, root opening, and backing requirements. All surfaces to be welded shall be properly cleaned and free of containments, rust, slag, mill scale, etc. Most common surface preparation methods are grinding, chipping and brushing, however for some situations use of a needle scaler is needed. Surface preparation between weld passes is also necessary to remove slag left behind during previous welds with the SMAW process

.

Preheat Temperatures – If the base metal temperature is less than the specified minimums (see table below), the base metal temperature of the materials to be joined shall be pre heated to the minimum preheat temperature specified. Preheat requirements are applicable to all field welding, including tack welds, and miscellaneous construction fixtures.

- Extent of preheat: The preheat temperature shall be maintained for a distance of at least 3 inches in all directions (or if the steel is greater than 3" thick, it shall be a distance equal to the thickness of the thickest part being joined) (AASHTO/AWS D1.5 Bridge Welding Code, section 4.2.2.1)
- Stud welding with an automatically timed stud gun shall follow the preheat requirements for stud welding in section 508 of the spec book.

Ambient Air Temperature – No welding will be permitted if the ambient air temperature is below 0º F (AASHTO/AWS D1.5 Bridge Welding Code, section 3.1.3).

Climate Restrictions – No welding will be permitted when the surfaces are wet or exposed to rain, snow or high wind velocities. (AASHTO/AWS D1.5 Bridge Welding Code, section 3.1.3).

Minimum Preheat and Interpass Temperature, ºF

	Thickness of Thickest Part at Point of Welding in inches			
Base Metal	Up to ¾" incl.	Over ¾" to 1 ½" incl.	Over 1 ½" to 2 ½" incl.	Over 2 ½"
Grade 36, 50, 50W, HPS 50W	50º F*	70º F	150º F	225º F
Grade HPS 70W, 100, 100W	50º F*	125º F	175º F	225º F

* When the base-metal temperature is below 32º F, the minimum preheat temperature shall be increased to 70º F and maintained during welding (AASHTO/AWS D1.5 Bridge Welding Code, section 4.2.8).

Common Weld Defects and Testing

Cracks – All cracks are unacceptable and must be completely removed and re-welded.

Porosity – Porosity is a cavity in the weld that is formed by gas escaping from the molten weld metal during solidification. It is commonly caused by contamination of the base metal or electrode, but can also be caused by improper weld technique, or too fast of a travel speed.

Craters – Craters are the ends of weld passes where the weld is not filled to its full cross section, typically caused by pulling the electrode away too soon. The stress concentrations that are caused by the unfilled crater may cause crater cracks to form because of tension on the weld in the affected area. All welds must have full cross section the entire length of the weld.

Undercut – A notch in the base metal along a leg characterizes a weld undercut. Excessive current or improper technique can cause undercut.

Overlap – Overlap is a sharp surface connected discontinuity that forms a severe mechanical notch because the weld metal protrudes or flows beyond the toe of face of the weld without fusion. Overlap can occur as a result of improper preparation of the base metal or failure to control the welding process.

Arc Strike – Arc strikes are areas where the welding electrode comes into contact with the base metal outside of the final weld. Arc strikes result in heating and very rapid cooling. Arc strikes may result in hardening or fatigue cracking, and serve as potential sites for fracture initiation.

Non-destructive Evaluation – There are 5 main types: Visual, Liquid Penetrate, Magnetic Particle, Ultra Sonic, and X-Ray. On typical field welding situations, visual inspection is often the only NDE that is done. However, on weld repairs or crack repairs, it is highly likely to see at least one other type of NDE besides visual.

Weld Repairs – If any defects or discontinuities are noticed, the Agency's Structural Steel Fabrication Engineer shall be contacted. When an unacceptable defect or discontinuity exists, some type of a weld repair is required (this will require an approved WPS and welder to perform the repair).

Pile tip detail

- Pile Tips shall be welded onto piles per the specifications of the Manufacturer. These can be welded in the field or in a fabrication plant, however in either case, pre-approval is required for procedures and welder/fabricator by the Agency's Structural Steel Fabrication Engineer. Piles that arrive to the construction site with tips welded to them without pre-approved procedures/welders are rejectable.

- Note that pile tips may be welded by either a D1.1 or D1.5 certified welder who is listed on the VTrans pre-qualified welder list but shall be welded per D1.5 code unless the project specifications state otherwise.

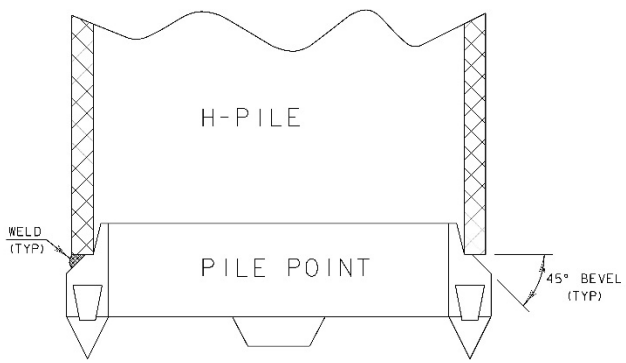

NOTES:

H-PILE SHALL HAVE A SQUARE CUT END FOR THE PILE POINT TO FIT ON TO.

PILE POINTS SHALL BE WELDED IN EITHER THE FLAT OF VERTICAL POSITION USING 7018 ELECTRODES. OTHER ELECTRODES LISTED IN TABLE 4.1 OF THE ASSHTO/AWS D1.5 BRIDGE WELDING CODED MAY ALSO BE APPROVED.

WELD ACROSS THE FULL WIDTH OF BOTH FLANGES WHILE MAINTAINING THE MINIMUM WELD SIZE ACCORDING TO THE CHART BELOW.

Pile Size	Flange Thickness	Min. Size Groove Weld*
HP 14 x 117	0.805	7/16
HP 14 x 102	0.705	3/8
HP 14 x 89	0.615	3/8
HP 14 x 73	0.505	5/16
HP 12 x 84	0.685	3/8
HP 12 x 74	0.610	3/8
HP 12 x 63	0.515	5/16
HP 12 x 53	0.435	5/16
HP 10 x 57	0.565	5/16
HP 10 x 42	0.420	5/16
HP 8 x 36	0.445	5/16

* UNLESS OTHERWISE SPECIFIED BY THE MANUFACTURER.

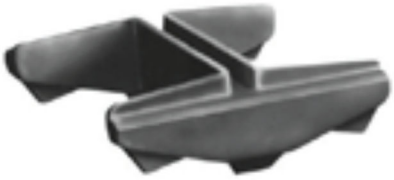

Pile Point

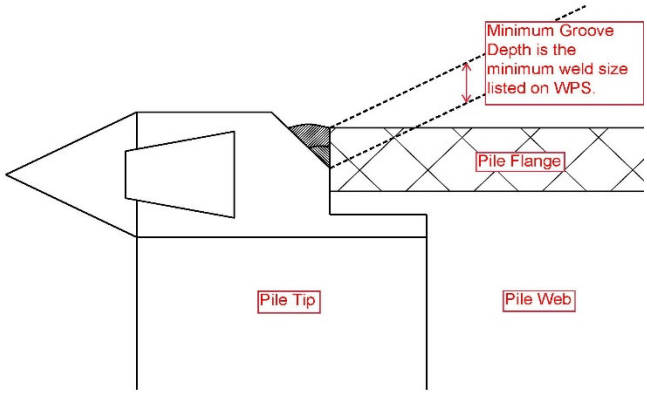

Pile Splice detail

- Even though the splice detail can be seen here, WPS's are required to be submitted to, and approved by, the Structural Steel Fabrication Engineer prior to performing any welding. Joint fit up, details, and welding must be performed in accordance with AASHTO/AWS D1.5 Bridge Welding Code.
    - It shall be noted that even though the joint and welding shall be done per AWS D1.5 code, both D1.1 and D1.5 certified welders are allowed to perform the welding as long as they are on the pre-qualified welding list and meeting the postion and thickness requirments.

- Welding the splice plates:
    - The lower two (2) sides of the plate are 4F (overhead welds) and are required to be done in a minimum of 2 passes (for an overhead 3/8" fillet weld).
    - The upper two (2) sides of the plate are 3F (vertical welds) and are required to be done in the uphill direction. These may be performed using either 1 or 2 passes.

- Full Penetration Flange Welds:
    - After the groove is fully welded from the arrow side of the joint, the other side must be back gouged to sound weld metal and then welded from that side.

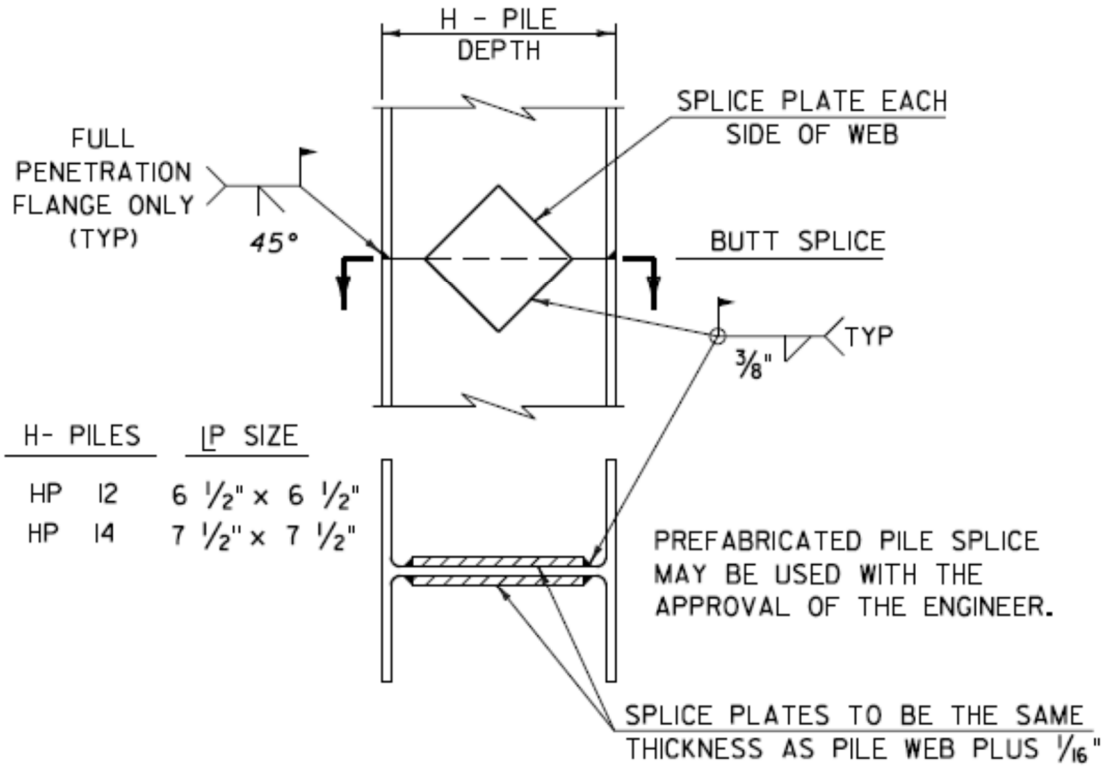

DETAIL OF PILE SPLICE

VTrans Contacts

Structural Steel Fabrication Engineer – Ryan Foster, P.E. ---------- 802-595-1109 (cell)

Email: ryan.foster@vermont.gov
Mail: Ryan Foster
State of Vermont Highway Division
219 North Main Street
Barre, VT, 05641

Construction Structures Engineer – Bob Klinefelter, P.E. ---------- 802-595-4403 (cell)
Email: bob.klinefelter@vermont.gov

Pre-Qualification Process for field welding

Notes:

- **Any welder who was on a prior year or is on the current year pre-qualified** list and wants to be on the next years' list, he/she must submit to the agency (between January 1st to March 31st) their welding log to show that they have met the 6-month requirement (refer to the requirements section below for more details).

- **Any welder who has not previously been on the pre-qualified list** shall submit to the agency **ALL** of the required documentation and records (see below) prior to March 31st.

    1. Welder's Qualification test results and/or a copy of the welder's AWS photo certification card.
    2. The welder's welding log showing that they meet the period of effectiveness in accordance with the AWS D1.5 Bridge Welding Code/AWS D1.1 Structural Welding Code. (There cannot be a period of more than 6 months pass where the welder did not engage in a given process that he/she is qualified for)

- By April 1st each year, the Agency will post a list of pre-qualified welders for field welding on Agency work for a one-year period (through March 31st, the following year). Even though pre-qualified welders are said to be approved for the 12-month period, all welders shall continue to maintain a welding log to show that they meet the AWS D1.5/AWS D1.1 requirements of not letting more than 6 months pass without welding in a given process in which they are qualified for. All welders shall have their welding log available for review upon request on site while welding is performed.

- The pre-qualified welder list shows for each welder whether they are D1.1 or D1.5 certified and what (if any) limitations there are on thickness or position. It shall be noted that thickness limitations only apply to groove welds, not fillet welds.

- Any welder, who is not on the current pre-qualified list, still has the possibility to be approved throughout the year by submitting all of the required documentation and records to the Agency's Structural Steel Fabrication Engineer. However, it shall be noted that this may take up to two weeks (14 calendar days) to review and either approve or reject the welder. Upon approval, that welder will be added to the pre-qualified list for the remainder of the qualified period (April 1st through March 31st).

- If a welder is not approved due to in-adequate documentation or test results, the welder has the option to re-test in order to meet those requirements.

- Even though a welder may be on the pre-qualified welder list, the Agency Structural Steel Fabrication Engineer can still revoke the approval if there is reason to question the welder's ability.

Requirements:

- Welders must successfully pass the qualification tests for given process and position in accordance with the AWS D1.5 Bridge Welding Code.
    - To qualify for SMAW (stick welding) unlimited thickness and all positions (typically done by most welders who do Agency work), there are 2 tests performed. Both tests are

full penetration groove welds on 1" thick plate. One is done in the vertical up position, and the second is done in the overhead position. Successful completion of both of these tests, qualifies that welder for both fillet welds and groove welds in all positions and for unlimited thickness.

- Welders who successfully complete and pass the qualifications tests, shall continue to be qualified unless the welder allows 6 months to pass without welding in a given process, or until there is reason to question the welder's ability.

- Welders shall keep a welding log of work they have performed to document and show that they have not let 6 months lapse without welding in each process in which they are qualified for. If a welder cannot produce a log showing this, they have the option to do the requalification test in accordance to the AWS D1.5/AWS D1.1.

Welding Procedure Specification

Material specification _____
Welding process _____
Manual or machine _____
Position of welding _____
Filler metal specification _____
Filler metal classification _____
Flux _____
Shielding gas _____ Flow rate _____
Single or multiple pass _____
Single or multiple arc _____
Welding current _____
Polarity _____
Welding progression _____
Root treatment _____
Preheat and interpass temperature _____
Postheat treatment _____

WELDING PROCEDURE

Pass no.	Electrode size	Welding current		Travel speed	Joint detail
		Amperes	Volts		

This procedure may vary due to fabrication sequence, fit-up, pass size, etc., within the limitation of variables given in Section 5. **(of the AASHTO/AWS D1.5 Bridge Welding Code and latest revision)**

Procedure no. _____ Contractor _____

Revision no. _____ Authorized by _____

Welder _____ Date _____

Project _____

Photo Examples - Acceptable

Root pass of a full penetration groove weld free of slag and ready for additional passes.

Completed outside of flange weld

Back gouging to sound metal before welding the back side

Completed backgouge and subsequent back side weld, as well as splice plate weld

Photo Examples - Unacceptable

Underfilled joint, lack of fusion, unacceptable profile

Porosity.

Misalignment, arc-strikes, unacceptable profile, contaminated surfaces, slag, undercut, porosity.

Misalignment, unacceptable profile, slag.

Severe undercut on flange edge welded to sole plate

Under fill, use of an unapproved wire fed process (GMAW) - note wire protruding from weld.