DRAINAGE PIPE NO.	INFO
105A	NEW 15"X2' MINIMUM, PVC SDR 35 INV IN MATCH EXISTING, INV OUT TBD
105	STA. 23+36, R, TO 23+60, R NEW 18" X 28.8', CPEP (SL) INV IN 364.72, INV OUT 364.00
106A	NEW 15"X2' MINIMUM, PVC SDR 35 INV IN MATCH EXISTING, INV OUT TBD
106	STA. 23+60, R, TO 23+79, R NEW 18" X 27.0', CPEP (SL) INV IN 363.00, INV OUT 362.90
107	STA. 23+79, R, TO 24+43, R NEW 24" X 65.9', CPEP (SL) INV IN 362.80, INV OUT 362.50
108	STA. 24+46, L, TO 24+56, L NEW 18" X 26.8', CPEP (SL) INV IN 361.90, INV OUT 361.30
109A	NEW 24" X 2' MINIMUM, PVC SDR 35 INV IN MATCH EXISTING, INV OUT 362.50 (USE ECCENTRIC REDUCER TO CONNECT TO EXISTING PIPE)
109B	NEW 15" X 2' MINIMUM, PVC SDR 35 INV IN MATCH EXISTING, INV OUT 364.00

DRAINAGE PIPE NO.	INFO
109	STA. 24+43, R, TO 24+51, R NEW 42" X 33.4', DI CLASS 350 POLYWRAPPED INV IN 361.50, INV OUT 361.40
110	NEW 4" X 12.1', PVC SDR 21 INV IN MATCH EXISTING, INV OUT LOWER THAN IN
111A	STA. 24+31, L, TO 24+51, L NEW 18" X 22.8, DI CLASS 350 POLYWRAPPED INV IN 336.70, INV OUT 336.60
111	STA. 24+51, R, TO 24+51, L NEW 42" X 36.0', DI CLASS 350 POLYWRAPPED INV IN 332.10, INV OUT 331.80
112	STA. 24+51, L, TO 25+25, L NEW 42" X 74.0', RCP INV IN 331.70, INV OUT 330.96

DRAINAGE PIPE NO.	INFO
113	NOT USED
114	NOT USED
115	STA. 26+68, R, TO 26+15, R NEW 18" X 68.3', CPEP(SL) INV IN 365.20, INV OUT 364.58
115A	NEW 4" X 2' MINIMUM, PVC SDR35 INV IN MATCH EXISTING, INV OUT 368.40
115B	NEW 18" X 2' MINIMUM, PVC SDR35 INV IN 364.48, INV OUT MATCH EXISTING
116	STA. 24+82, L, TO 24+51, L NEW 6" X 54.0', PVC SDR 35 INV IN TBD, INV OUT 355.00
116A	STA. 24+88, L, TO 24+77, L NEW 4" X 10.8, PVC SDR 35 INV IN SEE FOUNTAIN DETAIL, INV OUT TBD

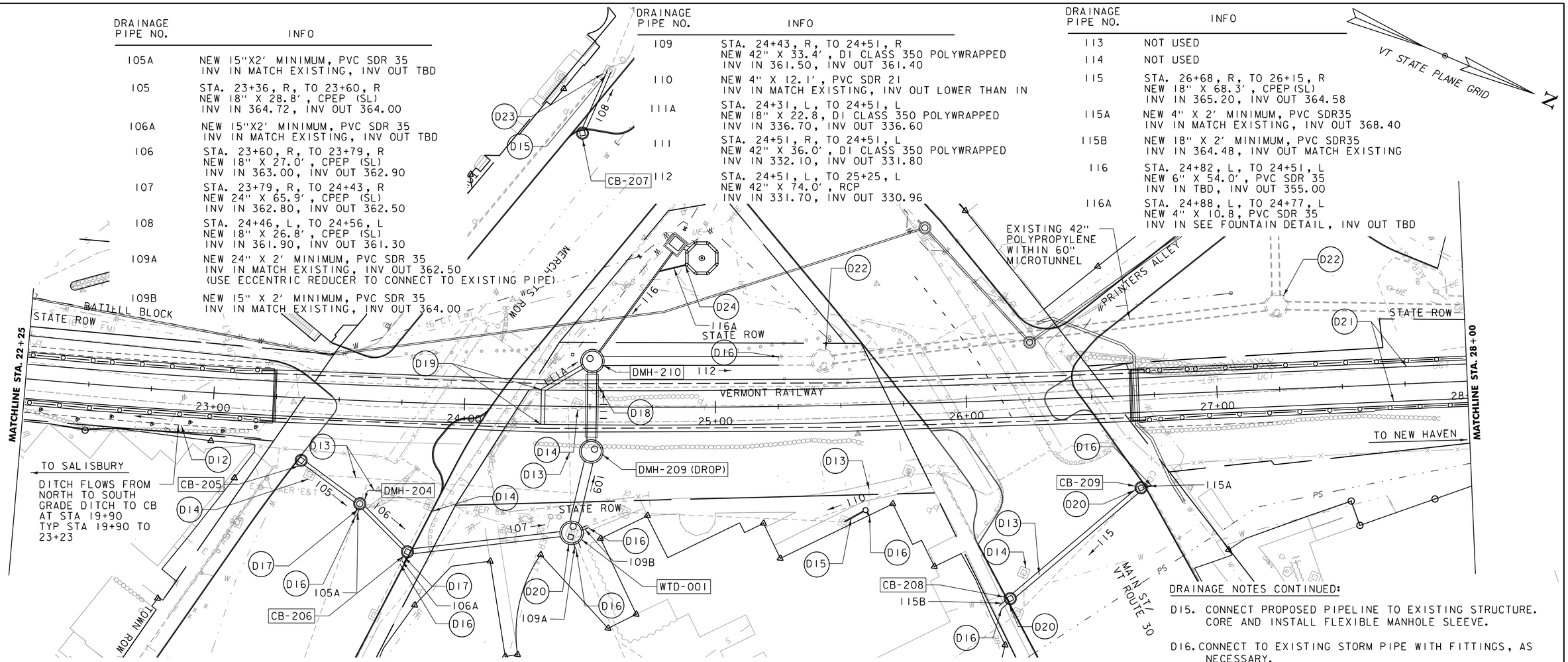

DRAINAGE STRUCTURE NO.	STATION	COMMENTS
CB-205	23+36.2, R	4' DIA. CATCH BASIN, TYPE "D" GRATE RIM 369.65', OFFSET 25.1' 105 INV OUT = 364.72
CB-206	23+79.3, R	4' DIA. CATCH BASIN, TYPE "D" GRATE RIM 369.91', OFFSET 59.5' 106 INV IN = 362.90 106A INV IN = TBD PRIOR TO ORDERING STRUCTURE 107 INV OUT = 362.80
CB-207	24+45.9, L	4' DIA. CATCH BASIN, TYPE "D" GRATE RIM 364.56', OFFSET 109.0' 108 INV OUT = 361.90
CB-208	26+14.6, R	4' DIA. CATCH BASIN, TYPE "D" GRATE RIM 370.56', OFFSET 79.0' 115 INV IN = 364.58 115B INV OUT = 364.48
CB-209	26+68.2, R	4' DIA. CATCH BASIN, TYPE "D" GRATE RIM 370.28', OFFSET 36.9' 115A INV IN = 368.40 115 INV OUT = 365.20
DMH-204	23+59.9, R	4' DIA. DRAINAGE MANHOLE, CAST-IRON-COVER RIM 370.37', OFFSET 41.1' 105 INV IN = 364.00 105A INV IN = TBD PRIOR TO ORDERING STRUCTURE 106 INV OUT = 363.00

DRAINAGE STRUCTURE NO.	STATION	COMMENTS
DMH-209 (DROP)	24+50.7, R	8' DIA. INSIDE DROP DRAINAGE MANHOLE CAST-IRON-COVER, RIM 368.69', OFFSET 17.8' 109 INV IN = 361.40 111 INV OUT = 332.10
DMH-210	24+50.8, L	8' DIA. DRAINAGE MANHOLE, CAST-IRON-COVER RIM 367.47', OFFSET 18.2' 111 INV IN = 331.80 111A INV IN = 336.60 116 INV IN = 355.00 112 INV OUT = 331.70
WTD-001	24+43.3, R	8' DIA. WATER TREATMENT DEVICE TYPE "D' GRATE AND CAST IRON COVER RIM 367.00', OFFSET 50.3' 109B INV IN = 364.00 109A INV IN = 362.50 107 INV IN = 362.50 109 INV OUT = 361.50

DRAINAGE NOTES:

D12. DITCH SHALL BE A STONE LINED SWALE (TYP.)

D13. EXISTING STORM DRAIN TO BE REMOVED WITHIN ROADWAY WITH PIPE ENDS CUT AND CAPPED. STORM DRAIN CAN BE ABANDONED IN-PLACE IN LANDSCAPED AREAS WITH PIPE ENDS CUT AND CAPPED, WHERE DISTURBED. (TYP.)

D14. EXISTING STRUCTURE TO BE REMOVED AND PROPERLY DISPOSED.

LEGEND

(D#) = DRAINAGE NOTES

SCALE 1" = 20'-0"
20 0 20

DRAINAGE NOTES CONTINUED:

D15. CONNECT PROPOSED PIPELINE TO EXISTING STRUCTURE. CORE AND INSTALL FLEXIBLE MANHOLE SLEEVE.

D16. CONNECT TO EXISTING STORM PIPE WITH FITTINGS, AS NECESSARY.

D17. CONTRACTOR SHALL DETERMINE DEPTH, LOCATION, SIZE, AND MATERIAL OF EXISTING STORM LINE PRIOR TO ORDERING STRUCTURES.

D18. 60"X25' ASTM A53 GRADE B STEEL SLEEVE WITH 42" DI CLASS 350 (POLYWRAPPED) CARRIER PIPE INSTALLED VIA OPEN TRENCH

D19. RAILROAD UNDERDRAIN CONNECTION (SEE DETAIL).

D20. EXISTING STRUCTURE TO BE REMOVED AND REPLACED WITH NEW STRUCTURE.

D21. SPECIAL PROVISION (PERFORATED PVC PIPE (12")) (TYP.)

D22. RISERS SHALL BE USED TO ACHIEVE FINAL RIM ELEVATION

D23. REPLACE CATCH BASIN GRATE WITH SOLID COVER. RAISE RIM TO FINISHED GRADE, AS NECESSARY

D24. CONNECT 4" DRAIN LINE THROUGH FOUNTAIN

PROJECT NAME: MIDDLEBURY
PROJECT NUMBER: WCRS(23)

FILE NAME: zl3g542bdr_nul_drain.dgn
PROJECT LEADER: A.P. GUYETTE
DESIGNED BY: J.M. DUFFY
DRAINAGE LAYOUT SHEET (4 OF 7)

PLOT DATE: 4/30/2019
DRAWN BY: M.F. SUFFEL
CHECKED BY: R.E. MARVIN
SHEET 126 OF 328

DRAINAGE STRUCTURE NO.	STATION	COMMENTS
CB-210	29+00.7, R	4' DIA. CATCH BASIN, TYPE "D" GRATE RIM 358.75', OFFSET 16.1' 117B INV IN = 354.00 119A INV IN = 353.75 117 INV OUT = 338.55

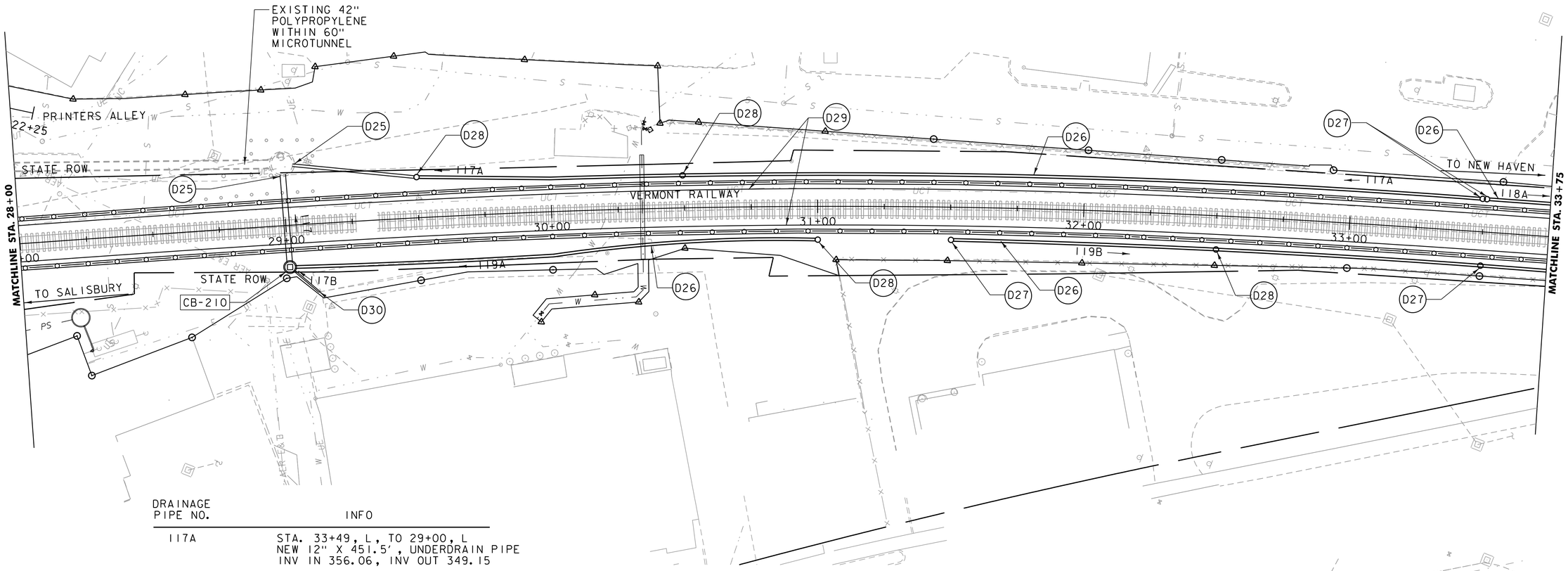

DRAINAGE PIPE NO.	INFO
117A	STA. 33+49, L, TO 29+00, L NEW 12" X 451.5', UNDERDRAIN PIPE INV IN 356.06, INV OUT 349.15
117B	STA. 29+11, R, TO 29+01, R NEW 6" X 14.2', PVC SDR35 INV IN MATCH EXISTING, INV OUT 354.00
117	STA. 29+01, R, TO 29+00, L NEW 24" X 39.2, DI CL 350 POLYWRAPPED INV IN 338.55, INV OUT 337.41
118A	STA. 33+98, L, TO 37+60, L NEW 12" X 409.3', UNDERDRAIN PIPE INV IN 356.06, INV OUT 350.88 *LENGTH EXTENDS TO OTHER SHEETS
119A	STA. 31+00, R, TO 29+25, R NEW 12" X 198.6', UNDERDRAIN PIPE INV IN 356.29, INV OUT 353.75
119B	STA. 31+50, R, TO 35+00, R NEW 12" X 348.9', UNDERDRAIN PIPE INV IN 361.88, INV OUT 358.90 *LENGTH EXTENDS TO OTHER SHEEETS

DRAINAGE NOTES:

D25. CONNECT PROPOSED PIPELINE TO EXISTING STRUCTURE. CORE AND INSTALL FLEXIBLE MANHOLE SLEEVE.

D26. UNDERDRAIN PIPE, 12 INCHES (TYP.)

D27. UNDERDRAIN FLUSHING BASIN

D28. DRAINAGE INLET

D29. SPECIAL PROVISION (PERFORATED PVC PIPE (12")) (TYP.)

D30. CONNECT TO EXISTING 6" STORM PIPE WITH BENDS AS NECESSARY. REMOVE STORM PIPE NORTH OF CONNECTION. HORIZONTAL LOCATION OF CB-210 TO BE ADJUSTED IN THE FIELD, AS NEEDED. CONTRACTOR TO ENSURE CB-210 AVOIDS CONFLICT WITH EXISTING UNDERGROUND UTILITIES, AERIAL ELECTRIC POLE AND GUY WIRES. FINAL LOCATION TO BE APPROVED BY THE ENGINEER.

LEGEND

(D#) = DRAINAGE NOTES

SCALE 1" = 20'-0"
20 0 20

vhb

PROJECT NAME: MIDDLEBURY	
PROJECT NUMBER: WCRS(23)	
FILE NAME: zl3g542bdr_nul_drain.dgn	PLOT DATE: 4/30/2019
PROJECT LEADER: A.P. GUYETTE	DRAWN BY: M.F. SUFFEL
DESIGNED BY: J.M. DUFFY	CHECKED BY: R.E. MARVIN
DRAINAGE LAYOUT SHEET (5 OF 7)	SHEET 127 OF 328

DRAINAGE STRUCTURE NO.	STATION	COMMENTS
CB-213	34+99.8, R	4' DIA. CATCH BASIN, TYPE "D" GRATE RIM 362.50', OFFSET 15.7' 119B INV IN = 358.90 119 INV OUT = 356.33
CB-214	37+64.9, R	4' DIA. CATCH BASIN, TYPE "D" GRATE RIM 360.71', OFFSET 32.7' 120 INV OUT = 356.00
CB-215	37+59.6, R	4' DIA. CATCH BASIN, TYPE "D" GRATE RIM 360.59', OFFSET 15.0' 119 INV IN = 353.96 120 INV IN = 355.50 121A INV IN = 352.36 121 INV OUT = 350.00
CB-216	37+59.6, L	4' DIA. CATCH BASIN, TYPE "D" GRATE RIM 356.00', OFFSET 12.5' 121 INV IN = 349.60 118A INV IN = 350.88 122A INV IN = 353.00 122 INV OUT = 349.50
CB-217	37+75.4, L	4' DIA. CATCH BASIN, TYPE "D" GRATE RIM 360.44', OFFSET 32.1' 122 INV IN = 349.43 123A INV IN = 351.00 123 INV OUT = 349.33
CB-218	39+33.8, L	4' DIA. CATCH BASIN, TYPE "D" GRATE RIM 358.56', OFFSET 60.1' 123 INV IN = 348.91 124 INV OUT = 348.81

DRAINAGE PIPE NO.	INFO
118A	STA. 33+98, L, TO 37+60, L NEW 12" X 409.3', UNDERDRAIN PIPE INV IN 356.06, INV OUT 350.88 *LENGTH EXTENDS TO OTHER SHEETS
119B	STA. 31+50, R, TO 35+00, R NEW 12" X 348.9', UNDERDRAIN PIPE INV IN 361.88, INV OUT 358.90 *LENGTH EXTENDS TO OTHER SHEETS
119	STA. 35+00, R, TO 37+60, R NEW 18" X 259.8', CPEP(SL) INV IN 356.33, INV OUT 353.96
120	STA. 37+65, R, TO 37+60, R NEW 18" X 18.5', CPEP(SL) INV IN 356.00, INV OUT 355.50
121	STA. 37+60, R, TO 37+60, L NEW 24" X 27.5', DI CL 350 POLYWRAPPED INV IN 350.00, INV OUT 349.60
121A	STA. 41+00, R, TO 37+60, R NEW 12" X 340.4', UNDERDRAIN PIPE INV IN 353.87, INV OUT 352.36 *LENGTH EXTENDS TO OTHER SHEETS
122	STA. 37+60, L, TO 37+75, L NEW 18" X 25.2', CPEP(SL) INV IN 349.50, INV OUT 349.43
122A	STA. 41+00, L, TO 37+60, L NEW 12" X 340.4', UNDERDRAIN PIPE INV IN 354.50, INV OUT 353.00 *LENGTH EXTENDS TO OTHER SHEETS
123	STA. 37+75, L, TO 39+34, L NEW 18" X 160.8', CPEP(SL) INV IN 349.33, INV OUT 348.91
123A	NEW 18" X 2' MINIMUM, PVC SDR35 INV IN 351.00, INV OUT 351.00
124	STA. 39+34, L, TO 40+62, L NEW 18" X 131.1', CPEP(SL) INV IN 348.81, INV OUT 348.47 *LENGTH EXTENDS TO OTHER SHEETS

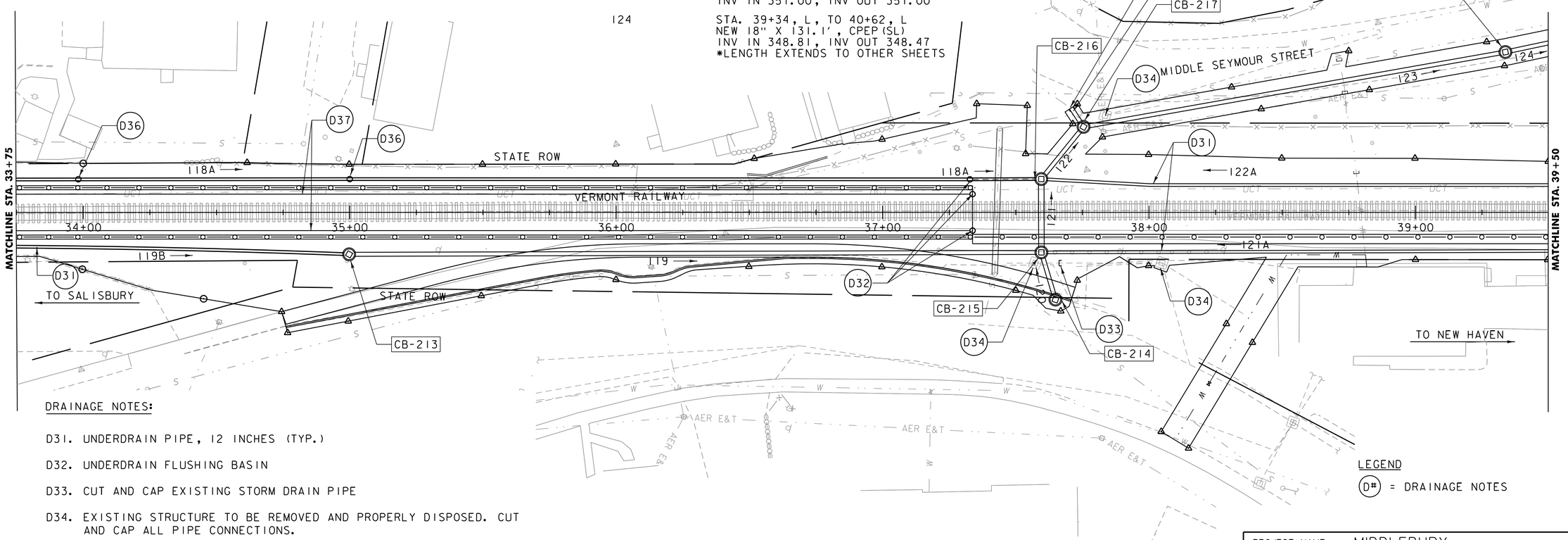

DRAINAGE NOTES:

D31. UNDERDRAIN PIPE, 12 INCHES (TYP.)

D32. UNDERDRAIN FLUSHING BASIN

D33. CUT AND CAP EXISTING STORM DRAIN PIPE

D34. EXISTING STRUCTURE TO BE REMOVED AND PROPERLY DISPOSED. CUT AND CAP ALL PIPE CONNECTIONS.

D35. 18" STUB WITH CAP FOR FUTURE CONNECTION.

D36. DRAINAGE INLET

D37. SPECIAL PROVISION (PERFORATED PVC PIPE, 12")

LEGEND

(D#) = DRAINAGE NOTES

SCALE 1" = 20'-0"
20 0 20

vhb

PROJECT NAME: MIDDLEBURY	
PROJECT NUMBER: WCRS(23)	
FILE NAME: z13g542bdr_nul_drain.dgn	PLOT DATE: 4/30/2019
PROJECT LEADER: A.P. GUYETTE	DRAWN BY: M.F. SUFFEL
DESIGNED BY: J.M. DUFFY	CHECKED BY: R.E. MARVIN
DRAINAGE LAYOUT SHEET (6 OF 7)	SHEET 128 OF 328

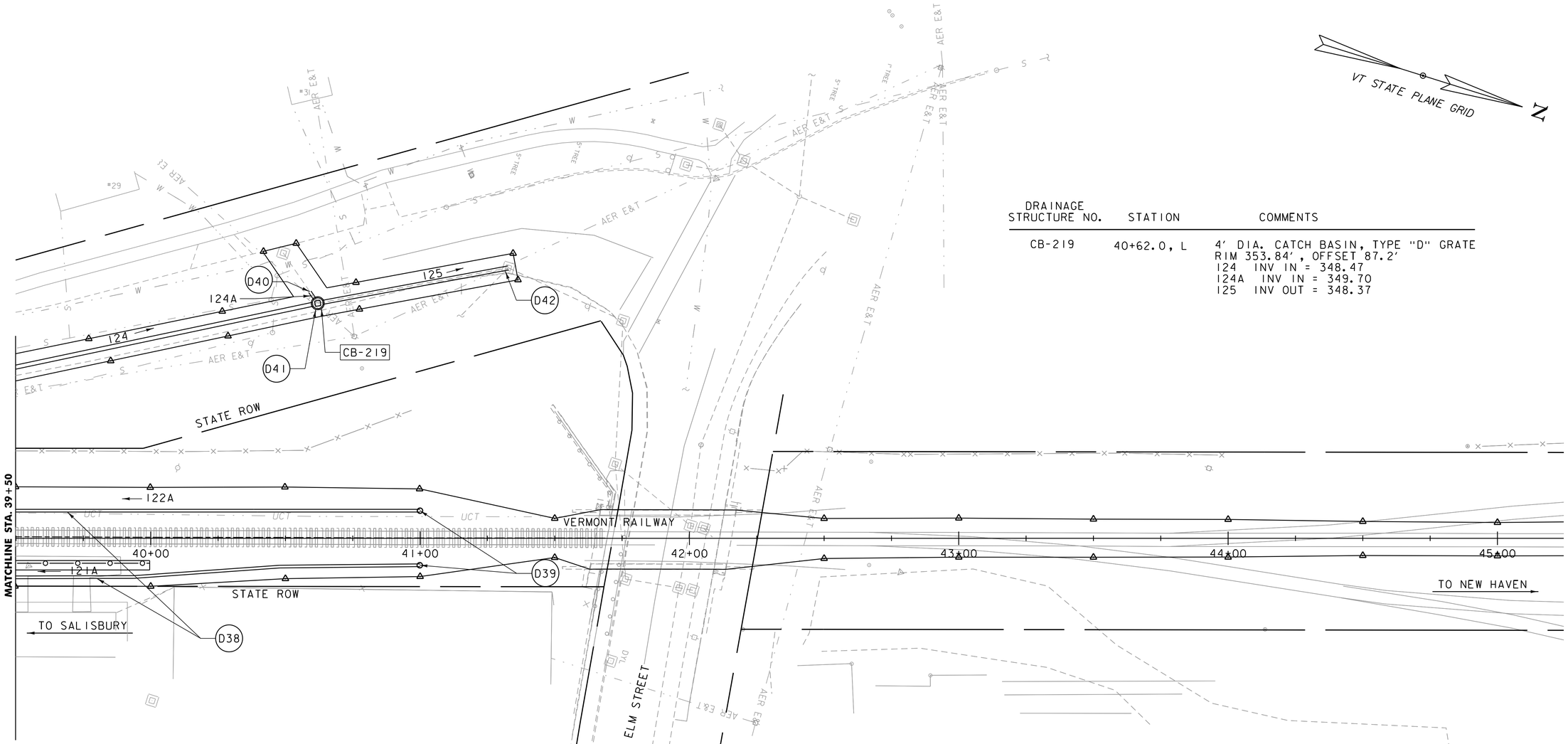

DRAINAGE STRUCTURE NO.	STATION	COMMENTS
CB-219	40+62.0, L	4' DIA. CATCH BASIN, TYPE "D" GRATE RIM 353.84', OFFSET 87.2' 124 INV IN = 348.47 124A INV IN = 349.70 125 INV OUT = 348.37

DRAINAGE PIPE NO.	INFO
121A	STA. 41+00, R, TO 37+60, R NEW 12" X 340.4', UNDERDRAIN PIPE INV IN 353.87, INV OUT 352.36 *LENGTH EXTENDS TO OTHER SHEETS
122A	STA. 41+00, R, TO 37+60, R NEW 12" X 340.4', UNDERDRAIN PIPE INV IN 354.50, INV OUT 353.00 *LENGTH EXTENDS TO OTHER SHEETS
124A	NEW 15" X 2' MINIMUM, PVC SDR35 INV IN MATCH EXISTING, INV OUT 349.70
124	STA. 39+34, L, TO 40+62, L NEW 18" X 131.1', CPEP(SL) INV IN 348.81, INV OUT 348.47 *LENGTH EXTENDS TO OTHER SHEETS
125	STA. 40+62, L, TO 41+33, L NEW 18" X 72.4', CPEP(SL) INV IN 348.37, INV OUT 341.00

DRAINAGE NOTES:

D38. UNDERDRAIN PIPE, 12 INCHES (TYP.)

D39. UNDERDRAIN FLUSHING BASIN

D40. CONNECT TO EXISTING STORM PIPE WITH FITTINGS, AS NECESSARY.

D41. EXISTING STRUCTURE TO BE REMOVED AND REPLACED WITH NEW STRUCTURE.

D42. CONNECT PROPOSED 18" DRAINAGE PIPE INTO EXISTING DRAINAGE MANHOLE IN EXISTING PENETRATION. PROVIDE FLEXIBLE MANHOLE SLEEVE, AS NECESSARY.

LEGEND

(D#) = DRAINAGE NOTES

SCALE 1" = 20'-0"
20 0 20

vhb

PROJECT NAME: MIDDLEBURY
PROJECT NUMBER: WCRS(23)

FILE NAME: z13g542bdr_nul_drain.dgn
PROJECT LEADER: A.P. GUYETTE
DESIGNED BY: J.M. DUFFY
DRAINAGE LAYOUT SHEET (7 OF 7)

PLOT DATE: 4/30/2019
DRAWN BY: M.F. SUFFEL
CHECKED BY: R.E. MARVIN
SHEET 129 OF 328

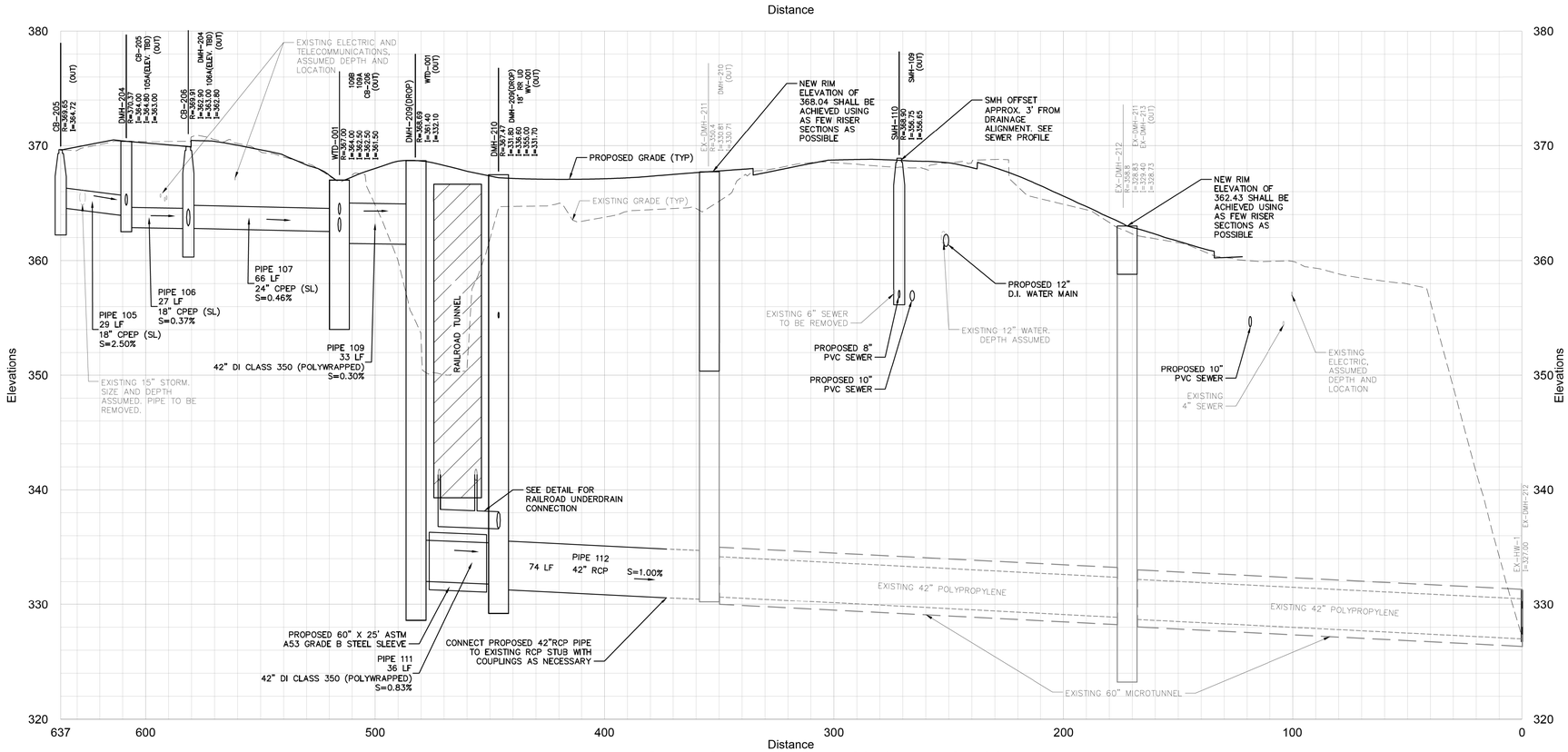

DRAINAGE PROFILE 2 - STA. 23+37 R to 27+28 L

Vert. 0 3 6 12 Feet

Horiz. 0 15 30 60 Feet

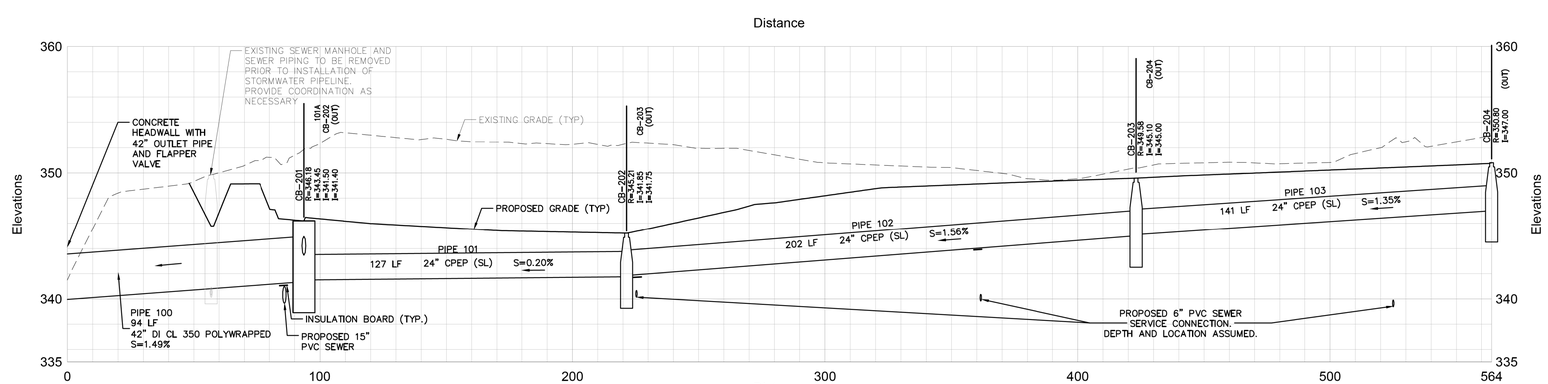

DRAINAGE PROFILE 1 - STA. 15+34 L TO 19+90 R

Vert. 0 3 6 12 Feet

Horiz. 0 15 30 60 Feet

PROJECT NAME: MIDDLEBURY	
PROJECT NUMBER: WCRS(23)	
FILE NAME: zl3g542pro_util.dgn	PLOT DATE: 4/30/2019
PROJECT LEADER: A.P. GUYETTE	DRAWN BY: J.M. DUFFY
DESIGNED BY: J.M. DUFFY	CHECKED BY: M.E. OOMS
DRAINAGE & UTILITY PROFILE SHEET (1 OF 7)	SHEET 130 OF 328

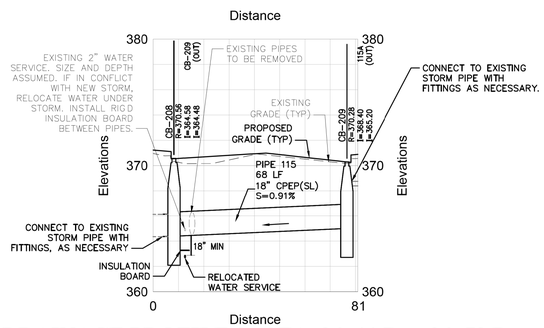

DRAINAGE PROFILE 3 - STA. 26+11 R to 26+72 R

Vert. 0 3 6 12 Feet

Horiz. 0 15 30 60 Feet

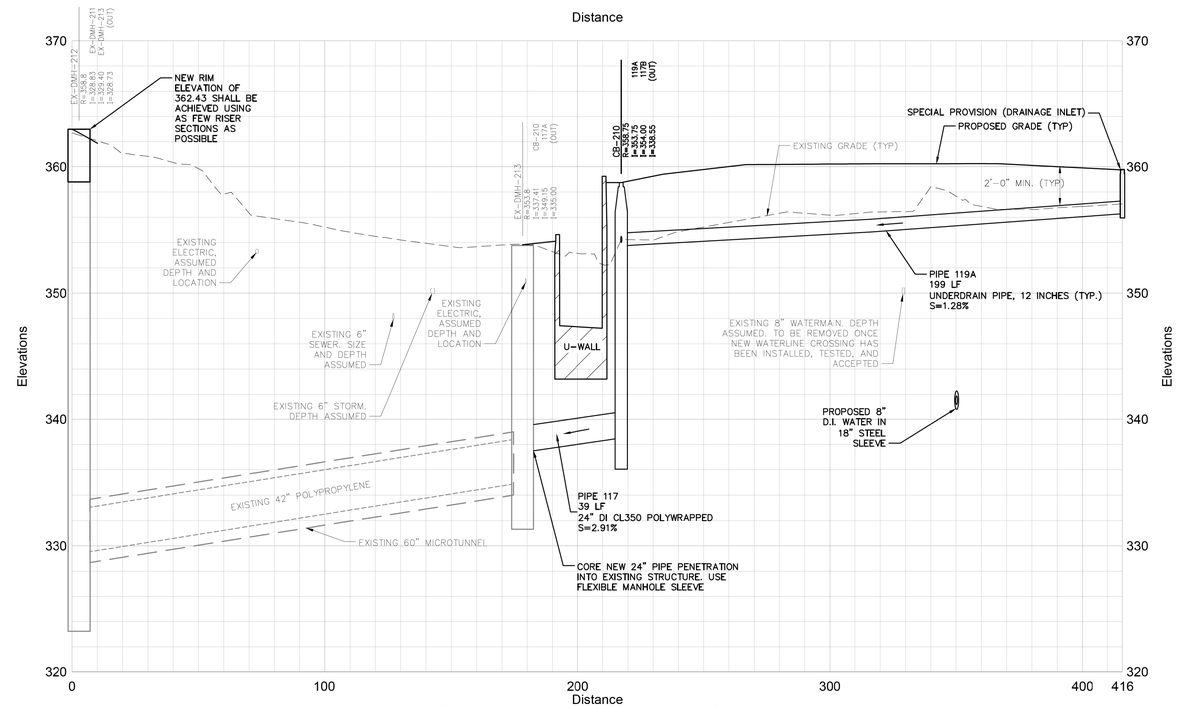

DRAINAGE PROFILE 4 - STA. 27+28 L to 31+00 R

Vert. 0 3 6 12 Feet

Horiz. 0 15 30 60 Feet

PROJECT NAME: MIDDLEBURY	
PROJECT NUMBER: WCRS(23)	
FILE NAME: zl3g542pro_util.dgn	PLOT DATE: 4/30/2019
PROJECT LEADER: A.P. GUYETTE	DRAWN BY: J.M. DUFFY
DESIGNED BY: J.M. DUFFY	CHECKED BY: M.E. OOMS
DRAINAGE & UTILITY PROFILE SHEET (2 OF 7)	SHEET 131 OF 328

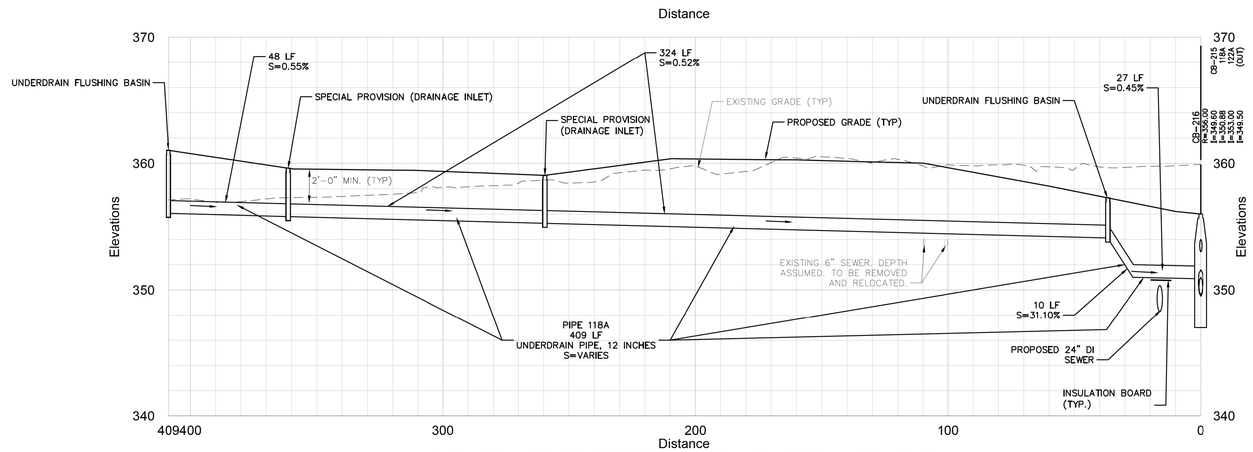

DRAINAGE PROFILE 6 - STA. 33+50 L to 37+60 L

Vert. 0 3 6 12 Feet

Horiz. 0 15 30 60 Feet

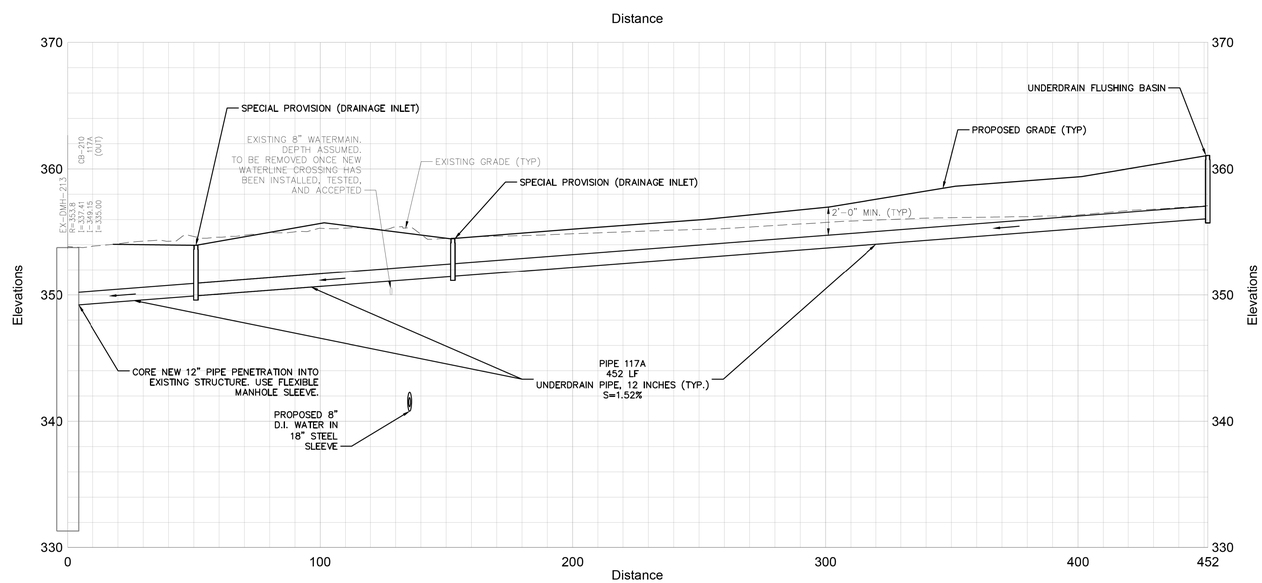

DRAINAGE PROFILE 5 - STA. 29+00 L to 33+49 L

Vert. 0 3 6 12 Feet

Horiz. 0 15 30 60 Feet

PROJECT NAME: MIDDLEBURY	
PROJECT NUMBER: WCRS(23)	
FILE NAME: zl3g542pro_util.dgn	PLOT DATE: 4/30/2019
PROJECT LEADER: A.P. GUYETTE	DRAWN BY: J.M. DUFFY
DESIGNED BY: J.M. DUFFY	CHECKED BY: M.E. OOMS
DRAINAGE & UTILITY PROFILE SHEET (3 OF 7)	SHEET 132 OF 328

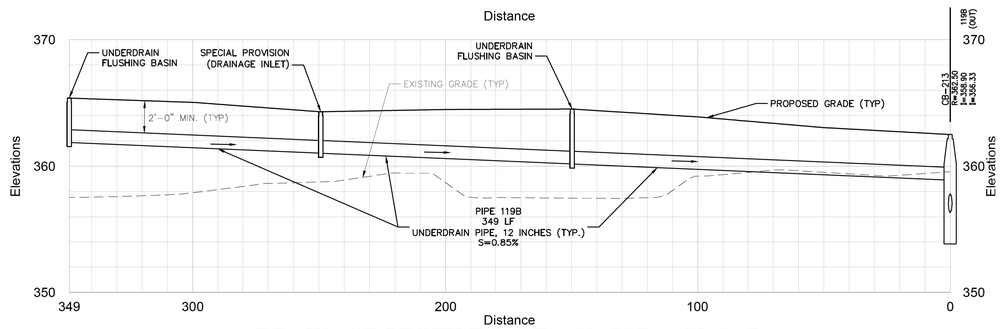

DRAINAGE PROFILE 7 - STA. 31+50 R to 35+00 R

Vert. 0 3 6 12 Feet

Horiz. 0 15 30 60 Feet

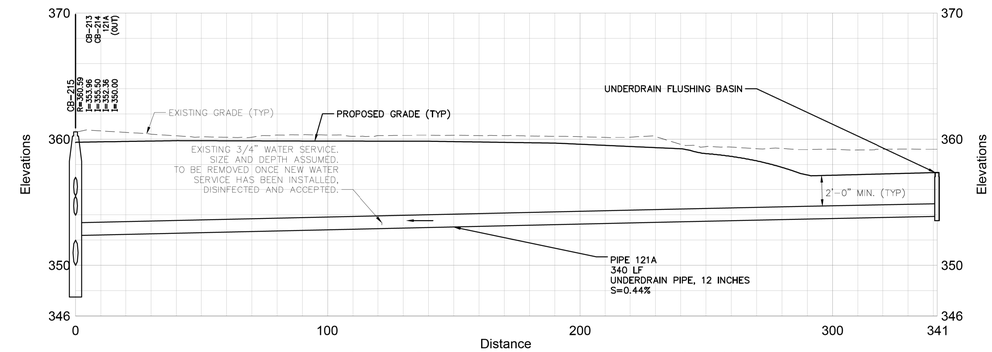

DRAINAGE PROFILE 9 - STA. 41+00 R to 37+60 R

Vert. 0 3 6 12 Feet

Horiz. 0 15 30 60 Feet

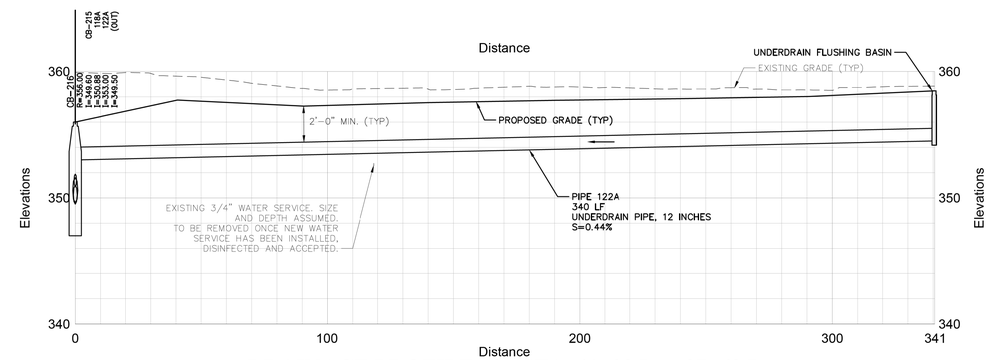

DRAINAGE PROFILE 10 - STA. 41+00 L to 37+60 L

Vert. 0 3 6 12 Feet

Horiz. 0 15 30 60 Feet

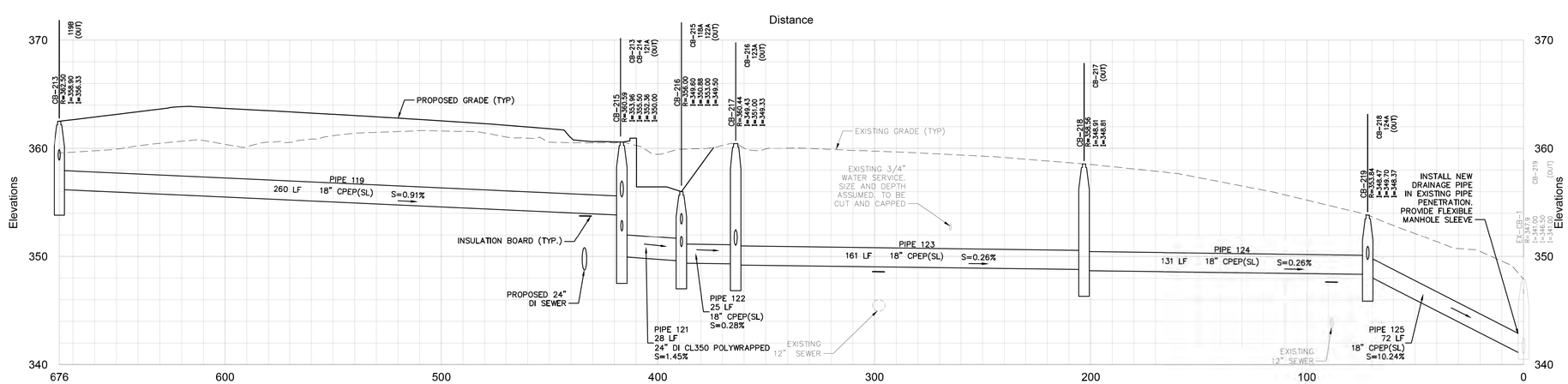

DRAINAGE PROFILE 8 - STA. 35+00 R to 41+33 L

Vert. 0 3 6 12 Feet

Horiz. 0 15 30 60 Feet

vhb

PROJECT NAME: MIDDLEBURY	
PROJECT NUMBER: WCRS(23)	
FILE NAME: zl3g542pro_util.dgn	PLOT DATE: 4/30/2019
PROJECT LEADER: A.P. GUYETTE	DRAWN BY: J.M. DUFFY
DESIGNED BY: J.M. DUFFY	CHECKED BY: M.E. OOMS
DRAINAGE & UTILITY PROFILE SHEET (4 OF 7)	SHEET 133 OF 328

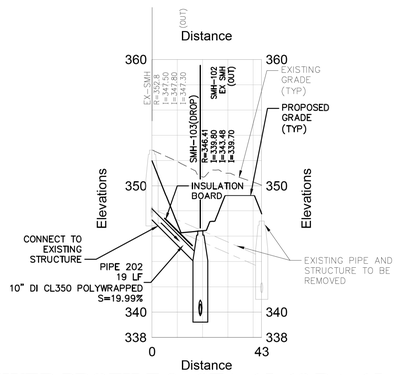

SEWER PROFILE 2 - STA. 15+18 R to 15+18 L

Vert. 0 3 6 12 Feet
Horiz. 0 15 30 60 Feet

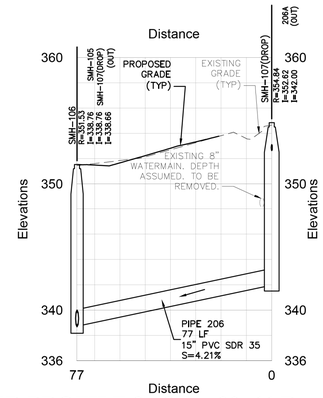

SEWER PROFILE 3 - STA. 20+11 R to 20+87 R

Vert. 0 3 6 12 Feet
Horiz. 0 15 30 60 Feet

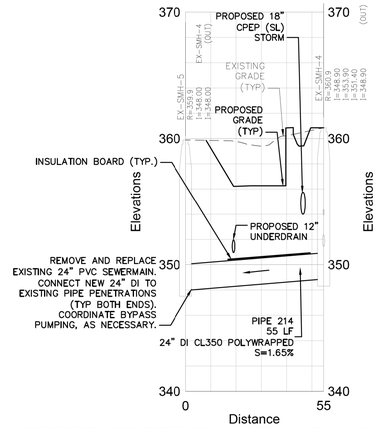

SEWER PROFILE 4 - STA. 37+44 L to 37+42 R

Vert. 0 3 6 12 Feet
Horiz. 0 15 30 60 Feet

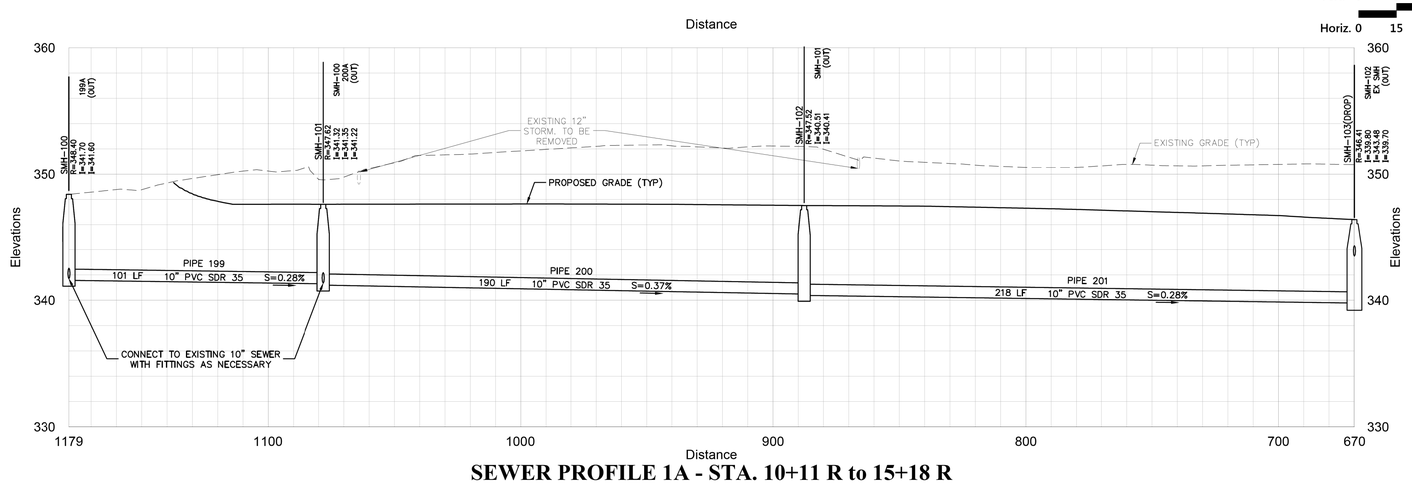

SEWER PROFILE 1A - STA. 10+11 R to 15+18 R

Vert. 0 3 6 12 Feet
Horiz. 0 15 30 60 Feet

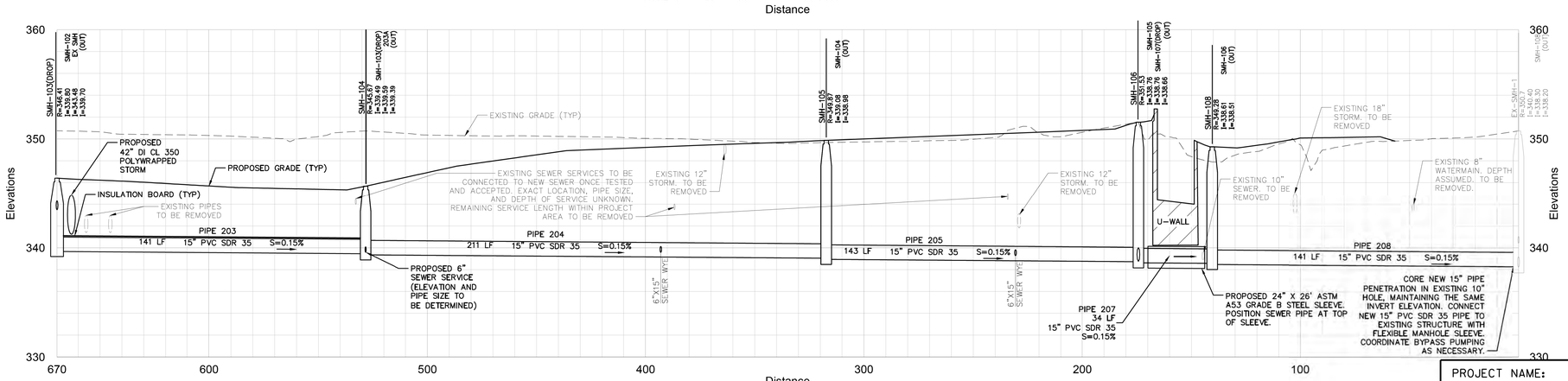

SEWER PROFILE 1B - STA. 15+18 R to 21+51 R

Vert. 0 3 6 12 Feet
Horiz. 0 15 30 60 Feet

PROJECT NAME: MIDDLEBURY	
PROJECT NUMBER: WCRS(23)	
FILE NAME: zl3g542pro_util.dgn	PLOT DATE: 4/30/2019
PROJECT LEADER: A.P. GUYETTE	DRAWN BY: J.M. DUFFY
DESIGNED BY: J.M. DUFFY	CHECKED BY: M.E. OOMS
DRAINAGE & UTILITY PROFILE SHEET (5 OF 7)	SHEET 134 OF 328

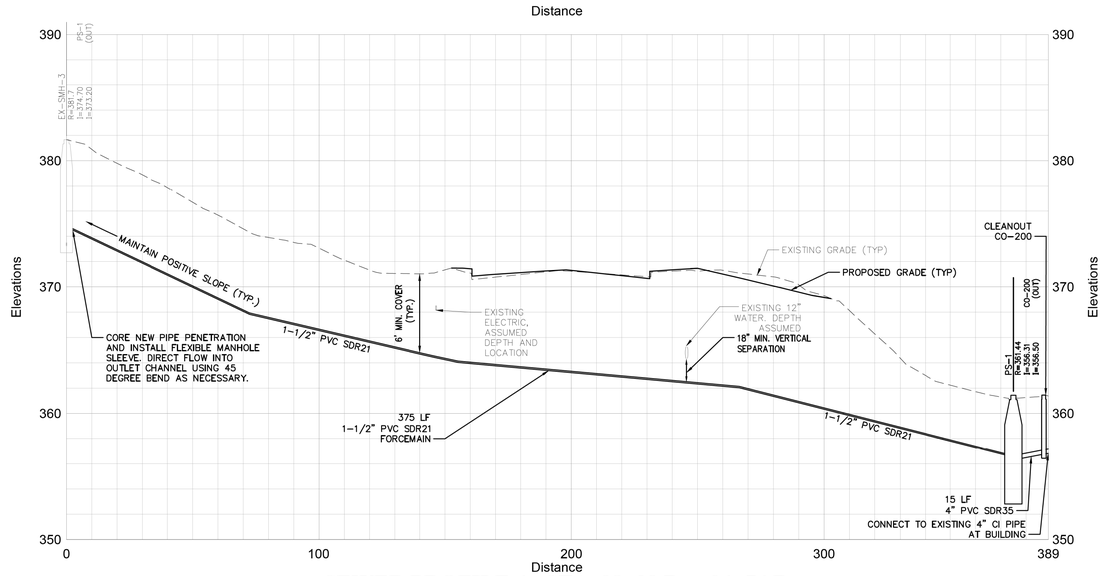

SEWER PROFILE 6 - STA. 28+23 R to 26+76 R

Vert. 0 3 6 12 Feet

Horiz. 0 15 30 60 Feet

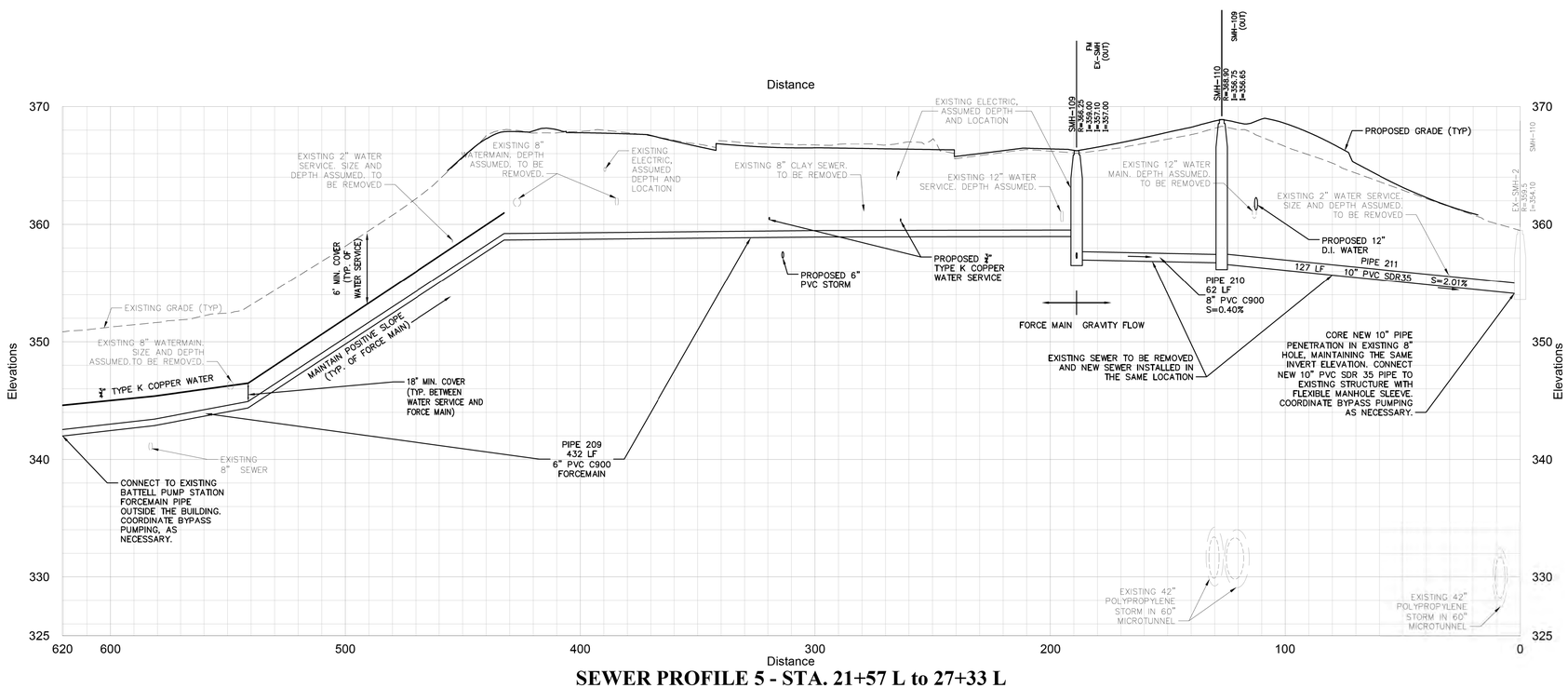

SEWER PROFILE 5 - STA. 21+57 L to 27+33 L

Vert. 0 3 6 12 Feet

Horiz. 0 15 30 60 Feet

PROJECT NAME: MIDDLEBURY	
PROJECT NUMBER: WCRS(23)	
FILE NAME: zl3g542pro_util.dgn	PLOT DATE: 4/30/2019
PROJECT LEADER: A.P. GUYETTE	DRAWN BY: J.M. DUFFY
DESIGNED BY: J.M. DUFFY	CHECKED BY: M.E. OOMS
DRAINAGE & UTILITY PROFILE SHEET (6 OF 7)	SHEET 135 OF 328

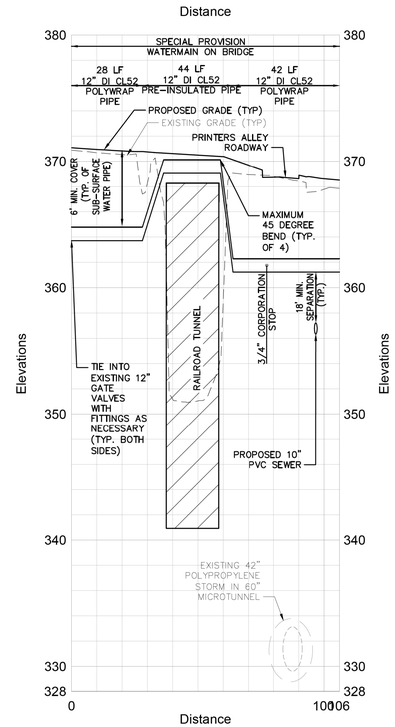

WATER PROFILE 2 - STA. 26+82 R to 26+33 L

Vert. 0 3 6 12 Feet
Horiz. 0 15 30 60 Feet

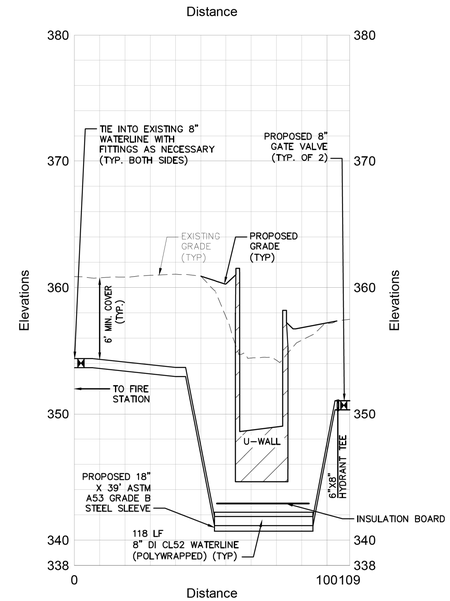

WATER PROFILE 3 - STA. 29+93 R to 30+36 L

Vert. 0 3 6 12 Feet
Horiz. 0 15 30 60 Feet

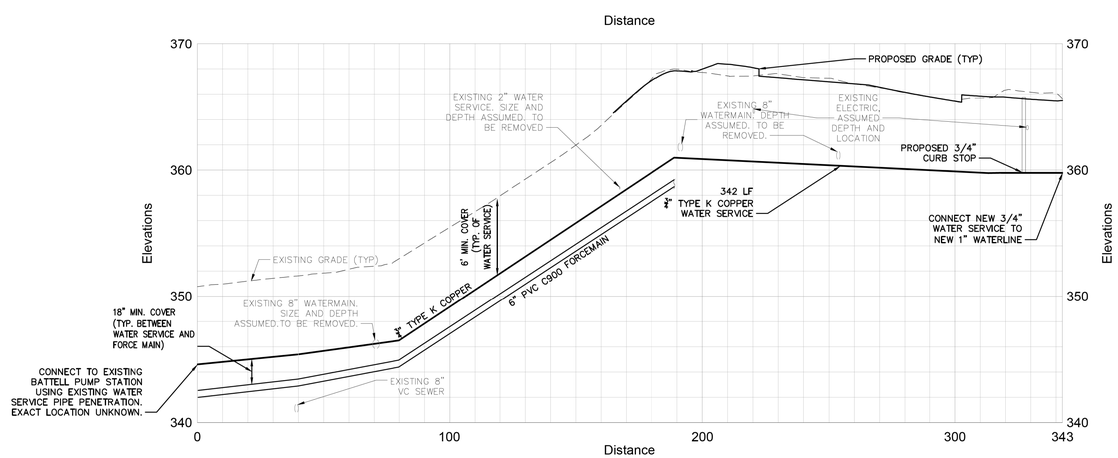

WATER PROFILE 1 - STA. 21+57 L to 24+92 L

Vert. 0 3 6 12 Feet
Horiz. 0 15 30 60 Feet

PROJECT NAME: MIDDLEBURY	
PROJECT NUMBER: WCRS(23)	
FILE NAME: zl3g542pro_util.dgn	PLOT DATE: 4/30/2019
PROJECT LEADER: A.P. GUYETTE	DRAWN BY: J.M. DUFFY
DESIGNED BY: J.M. DUFFY	CHECKED BY: M.E. OOMS
DRAINAGE & UTILITY PROFILE SHEET (7 OF 7)	SHEET 136 OF 328

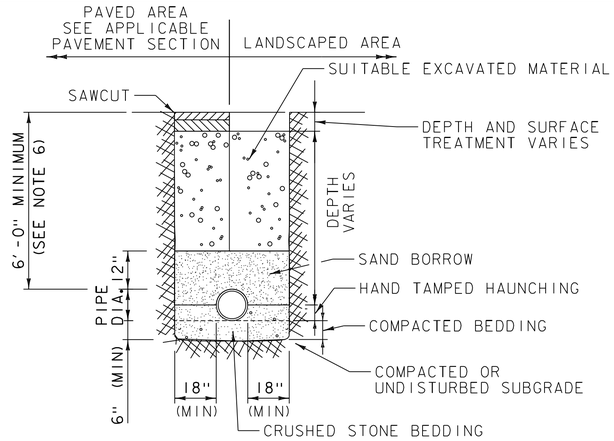

NOTES:

1. WHERE UTILITY TRENCHES ARE CONSTRUCTED THROUGH DETENTION BASIN BERMS OR OTHER SUCH SPECIAL SECTIONS, PLACE TRENCH BACKFILL WITH MATERIALS SIMILAR TO THE SPECIAL SECTION REQUIREMENTS.
2. BEDDING TO PROVIDE A FIRM, STABLE, CONTINUOUS, AND UNIFORM SUPPORT FOR THE FULL LENGTH OF THE PIPE.
3. NO MECHANICAL TAMPERS SHALL BE USED DIRECTLY OVER THE PIPE TO ENSURE PIPE IS NOT DAMAGED
4. CRUSHED STONE BEDDING SHALL BE 3/4" (REFER TO TABLE 704.02B IN THE STANDARD SPECIFICATIONS).
5. IF LESS THAN 6 FEET OF COVER IS PROVIDED, INSULATION BOARD IS REQUIRED.
6. TRENCHES AT RAILROAD CROSSINGS SHALL BE 6'-0" WIDE.
7. TRENCH EXCAVATION LIMITS SHOWN SHALL BE PAID FOR UNDER ITEMS 204.20 "TRENCH EXCAVATION OF EARTH" OR 204.21 "TRENCH EXCAVATION OF ROCK" BASED ON IN-SITU CONDITIONS AND AS APPROVED BY THE ENGINEER. LIMITS FOR THE SIDES OF TRENCH EXCAVATION OF EARTH AND TRENCH EXCAVATION OF ROCK SHALL BE VERTICAL.

STORM DRAIN, GRAVITY SEWERLINE AND FORCEMAIN SEWERLINE TRENCH

N.T.S

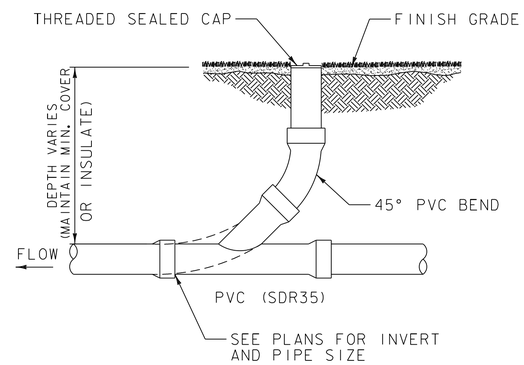

SANITARY SEWER CLEAN-OUT

N.T.S

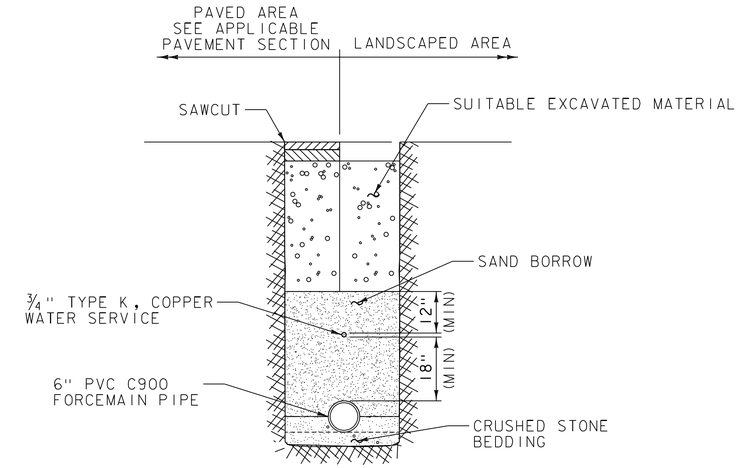

NOTES:

1. REFER TO WATERLINE AND FORCEMAIN SEWERLINE TRENCH DETAILS FOR MATERIALS, DIMENSIONS, AND NOTES

WATERLINE AND FORCEMAIN IN SAME TRENCH

N.T.S

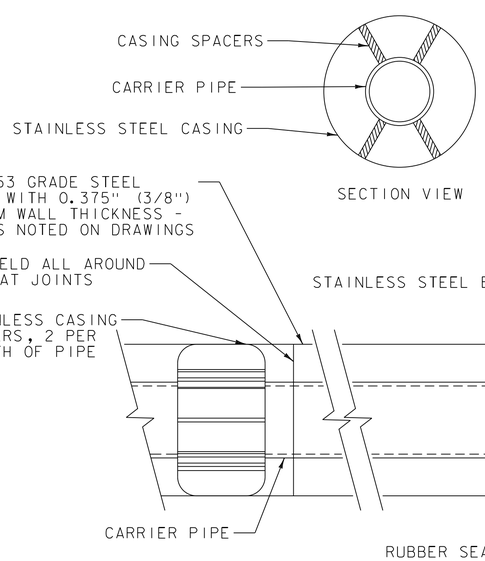

UTILITY SLEEVE

N.T.S

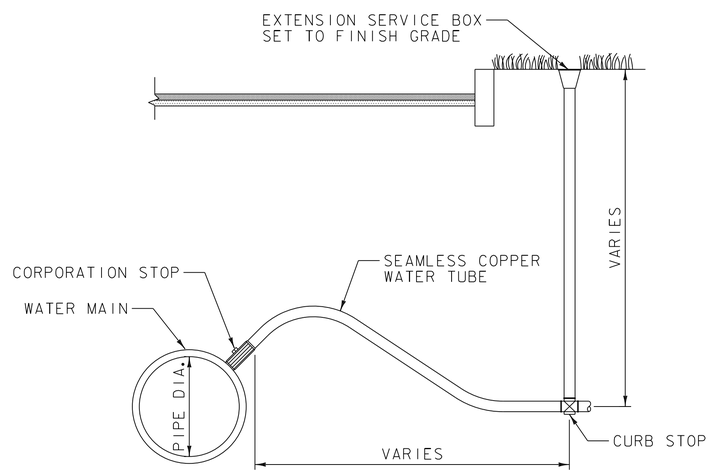

NOTES:

1. INSTALLATIONS SHALL CONFORM WITH MUNICIPAL WATER WORKS SPECIFICATIONS AND STANDARDS.
2. SEAMLESS COPPER WATER TUBE SHALL BE TYPE K COPPER.

CORPORATION STOP/EXTENSION SERVICE BOX AND CURB STOP

N.T.S

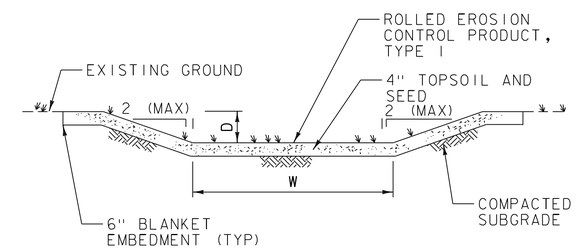

NOTES:

1. REFER TO SECTIONS FOR SWALE WIDTH (W) AND DEPTH (D) REQUIREMENTS.

GRASSED SWALE

N.T.S

PROJECT NAME: MIDDLEBURY	
PROJECT NUMBER: WCRS(23)	
FILE NAME: zl3g542details_util.dgn	PLOT DATE: 4/30/2019
PROJECT LEADER: A.P. GUYETTE	DRAWN BY: R.E. MARVIN
DESIGNED BY: A.P. GUYETTE	CHECKED BY: J.M. DUFFY
DRAINAGE & UTILITY DETAILS (1 OF 5)	SHEET 137 OF 328

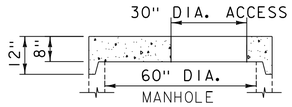

ALTERNATE TOP SLAB

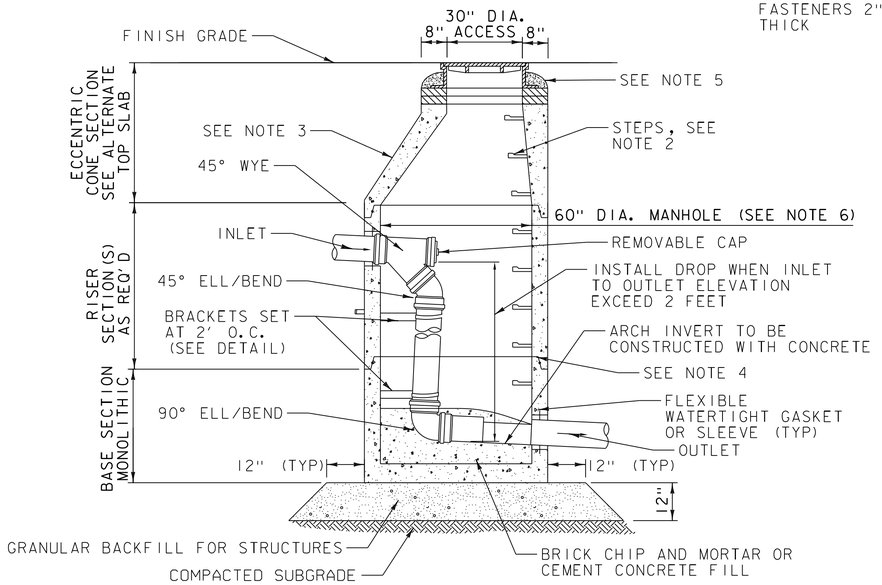

SPECIAL PROVISION (INSIDE DROP SEWER MANHOLE)

N.T.S

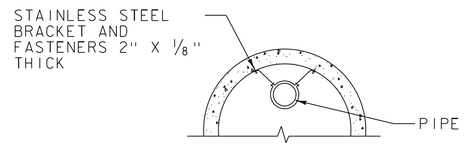

BRACKET DETAIL

NOTES:

1. COPOLYMER MANHOLE STEPS SHALL BE INSTALLED AT 12" O.C. FOR THE FULL DEPTH OF THE STRUCTURE
2. EXTERIOR SURFACES SHALL BE GIVEN TWO COATS OF BITUMINOUS WATERPROOFING MATERIAL.
3. JOINT SEALANT BETWEEN PRECAST SECTIONS SHALL BE A DOUBLE LAYER OF BUTYL RUBBER.
4. SEWER MANHOLE FRAME AND COVER SHALL BE SET IN FULL MORTAR BED. ADJUST TO GRADE WITH PRECAST CONCRETE RISER RINGS.
5. MANHOLE DIAMETER SHALL BE VERIFIED BY CONTRACTOR AND MANUFACTURER BASED ON PIPE GEOMETRICS AND SIZES.

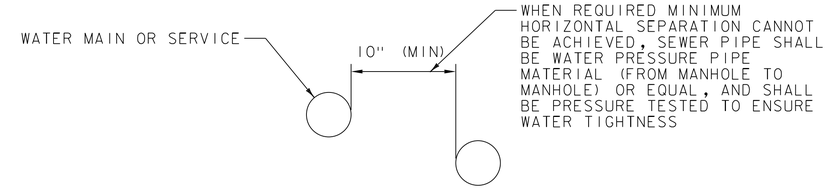

PARALLEL INSTALLATION

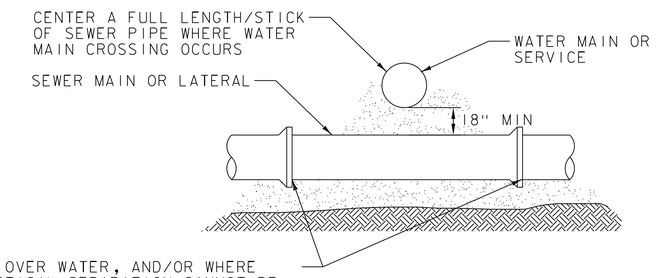

WHERE SEWER CROSSES OVER WATER, AND/OR WHERE REQUIRED MINIMUM VERTICAL SEPARATION CANNOT BE ACHIEVED, PLACE THE CENTER OF BOTH PIPES AT CROSSING LOCATION AND ENCASE THE TWO SEWER PIPE JOINTS NEAREST THE CROSSING IN CONCRETE, OR THE SEWER PIPE SHALL BE WATER PRESSURE PIPE MATERIAL (FROM MANHOLE TO MANHOLE) OR EQUAL AND SHALL BE PRESSURE TESTED TO ENSURE WATER TIGHTNESS

WATER AND SANITARY UTILITY CROSSINGS

WATER/SEWER SEPARATION

N.T.S

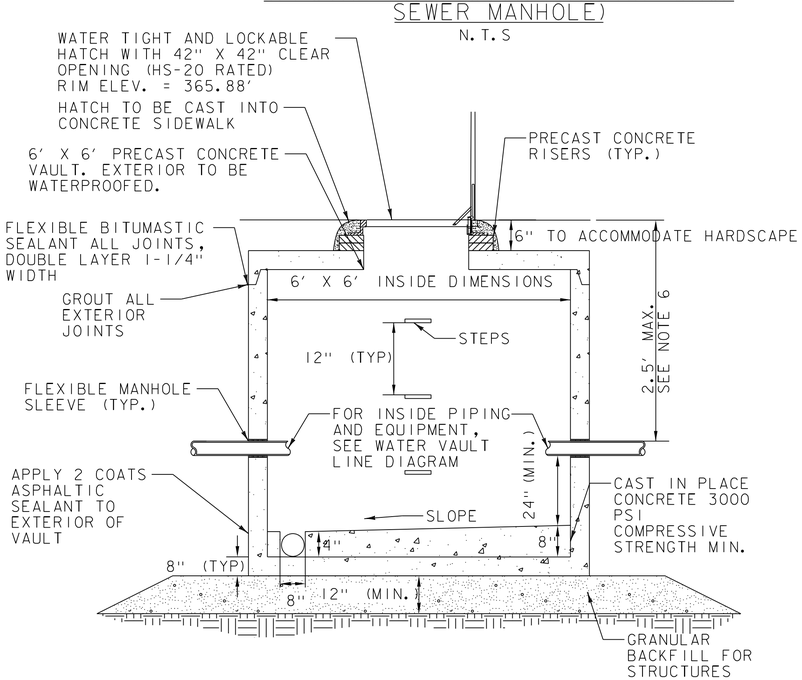

SPECIAL PROVISION (WATER VAULT)

N.T.S

NOTES:

1. SEE UTILITY LAYOUT SHEET FOR WATERLINE SIZES.
2. COPOLYMER STEPS SHALL BE INSTALLED AT 12" O.C. FOR THE FULL DEPTH OF THE STRUCTURE.
3. IF PLUMBING LAYOUT REQUIRES MULTIPLE LEVELS, THE LOWER LEVEL SHALL NOT BE GREATER THAN 30" FROM THE RIM.
4. CONTRACTOR SHALL PROVIDE PIPE SUPPORTS AND CONCRETE PUMP PAD, AS NECESSARY.
5. CONTRACTOR SHALL PROVIDE A 24" X 24" (MIN.) AREA AT THE BOTTOM OF THE STEPS, WHICH EXTENDS FROM THE FLOOR TO THE CEILING OF THE VAULT, THAT IS VACANT OF ANY PIPING AND/OR EQUIPMENT. THIS SPACE WILL BE USED FOR WATER DEPARTMENT ACCESS.
6. CONNECT THE ACCESS HATCH'S CHANNEL FRAME DRAIN COUPLER TO THE WATER VAULT SUMP VIA PLASTIC PIPING. DRAIN PIPING SHALL DAYLIGHT DIRECTLY ABOVE THE SUMP AND BE SECURED TO THE VAULT WALL.

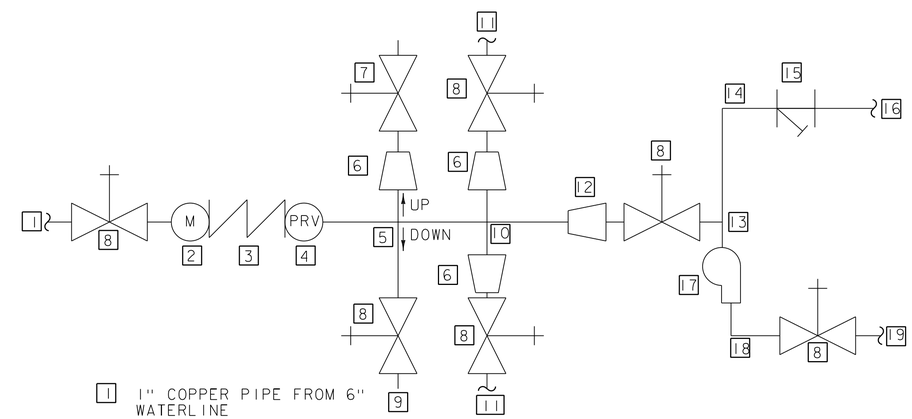

1. 1" COPPER PIPE FROM 6" WATERLINE
2. 1" BADGER METER (SUPPLIED BY TOWN)
3. DOUBLE CHECK VALVE BACKFLOW PREVENTER
4. PRESSURE REDUCING VALVE
5. 1" X 1" VERTICAL CROSS
6. 1" X 3/4" REDUCER
7. 3/4" HOSE BIB
8. BALL VALVE
9. MALE-THREADED END FOR DRAIN
10. 1" X 1" HORIZONTAL CROSS
11. 3/4" COPPER SERVICE TO EXTERIOR HOSE BIB
12. 1-1/4" X 1" REDUCER
13. 1-1/4" X 1-1/4" TEE
14. 1-1/4" COPPER PIPE
15. STRAINER
16. 1-1/4" COPPER PIPE FROM FOUNTAIN
17. PUMP
18. 1" COPPER PIPE
19. 1" COPPER PIPE TO FOUNTAIN

WATER VAULT LINE DIAGRAM

N.T.S

vhb

PROJECT NAME: MIDDLEBURY	
PROJECT NUMBER: WCRS(23)	
FILE NAME: zl3g542details_util.dgn	PLOT DATE: 4/30/2019
PROJECT LEADER: A.P. GUYETTE	DRAWN BY: R.E. MARVIN
DESIGNED BY: A.P. GUYETTE	CHECKED BY: J.M. DUFFY
DRAINAGE & UTILITY DETAILS (2 OF 5)	SHEET 138 OF 328

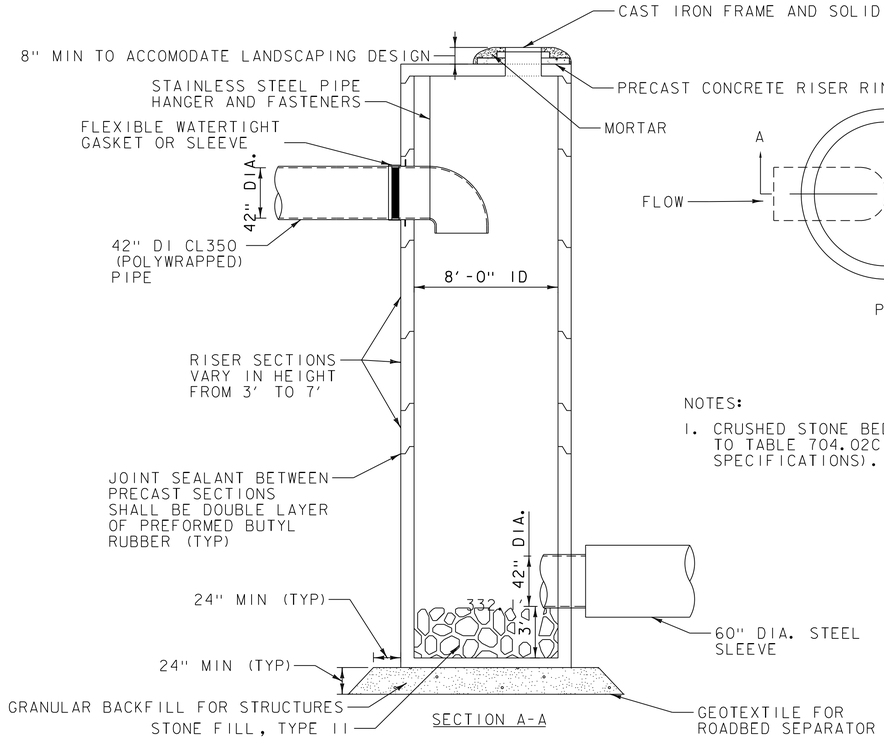

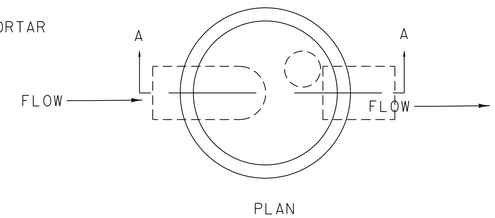

NOTES:

1. CRUSHED STONE BEDDING SHALL BE 1-1/2" (REFER TO TABLE 704.02C IN THE STANDARD SPECIFICATIONS).

SPECIAL PROVISION (STORM DRAIN MANHOLE)

N.T.S

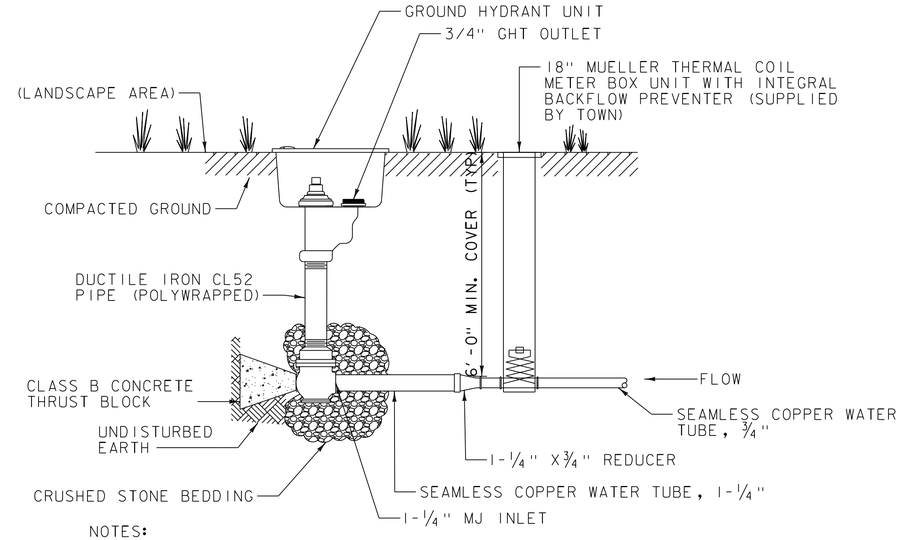

NOTES:

1. GROUND HYDRANTS SHALL BE SELF-DRAINING, NON-FREEZING, COMPRESSION TYPE, AND OPERATED WITH A "T" HANDLE OPERATING HANDLE. INLET SHALL BE 1-1/4" MJ, OUTLET SHALL BE 3/4" GHT.
2. HYDRANTS SHALL HAVE A DUCTILE IRON EXTERIOR CASING PIPE, A STAINLESS STEEL INTERIOR NON-TURNING OPERATING ROD WITH A HEAVY WALL, AND A BRASS BOX AND LOCKING LID.
3. PRINCIPAL INTERIOR OPERATING PARTS SHALL BE BRASS, BRONZE OR ALUMINUM AND BE REMOVABLE FOR SERVICING WITHOUT EXCAVATING THE HYDRANT.
4. GROUND HYDRANTS SHALL BE SET IN 4 CUBIC FEET OF CRUSHED STONE BEDDING TO ALLOW FOR PROPER DRAINAGE OF THE HYDRANT. RECOMMENDATIONS OF THE AWWA SHOULD FOLLOWED WHEN INSTALLING THE HYDRANT.
5. CRUSHED STONE BEDDING SHALL BE 3/4" (REFER TO TABLE 704.02B IN THE STANDARD SPECIFICATIONS).

SPECIAL PROVISION (GROUND HYDRANT)

N.T.S

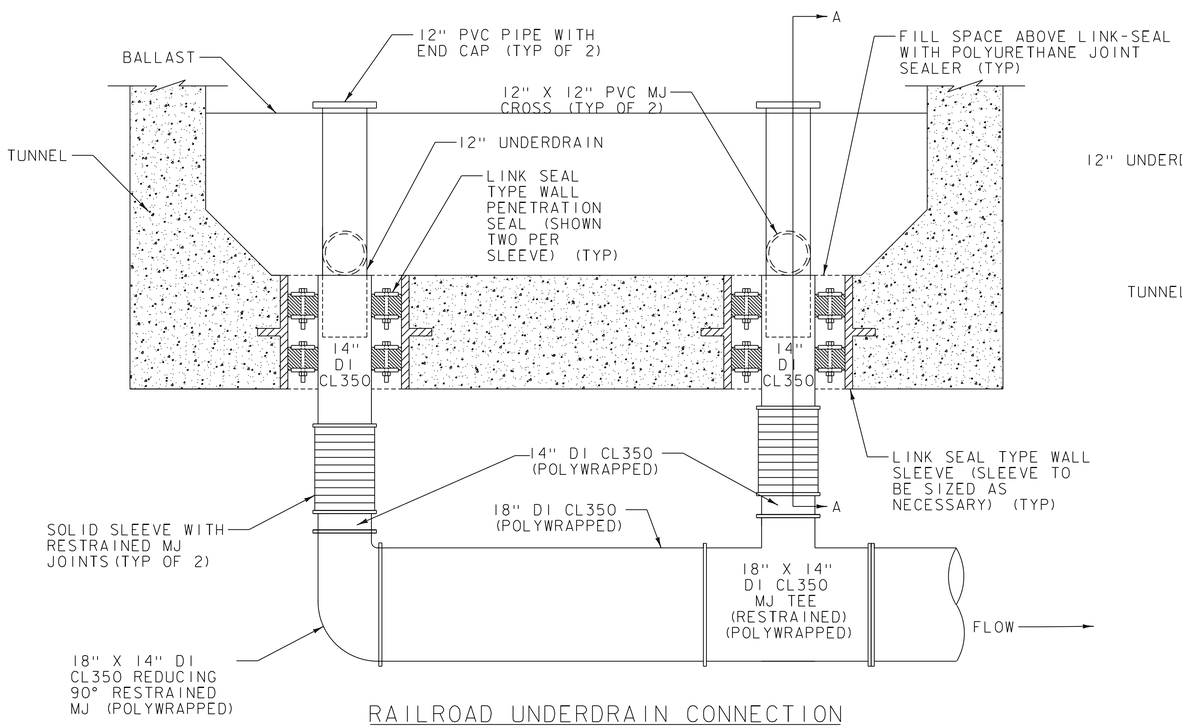

RAILROAD UNDERDRAIN CONNECTION

N.T.S

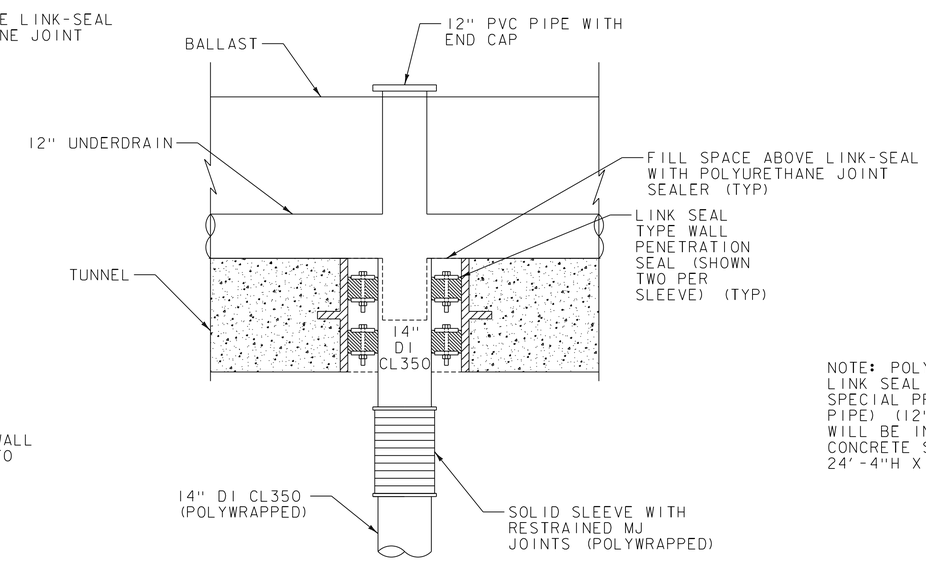

NOTE: POLYURETHANE JOINT SEALER AND LINK SEAL WILL BE INCIDENTAL TO SPECIAL PROVISION (PERFORATED PVC PIPE) (12"). STEEL SLEEVE IN PRECAST WILL BE INCIDENTAL TO PRECAST CONCRETE STRUCTURE (17'-9"W X 24'-4"H X 345'-0"L TUNNEL).

RAILROAD UNDERDRAIN CONNECTION SECTION VIEW (A-A)

N.T.S

vhb

PROJECT NAME: MIDDLEBURY	
PROJECT NUMBER: WCRS(23)	
FILE NAME: zl3g542details_util.dgn	PLOT DATE: 4/30/2019
PROJECT LEADER: A.P. GUYETTE	DRAWN BY: J.M. DUFFY
DESIGNED BY: A.P. GUYETTE	CHECKED BY: A.P. GUYETTE
DRAINAGE & UTILITY DETAILS (3 OF 5)	SHEET 139 OF 328

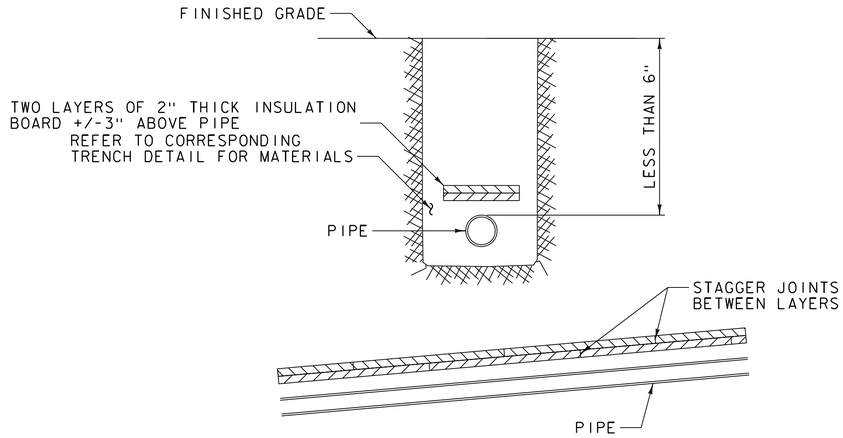

INSULATION BOARD
N.T.S

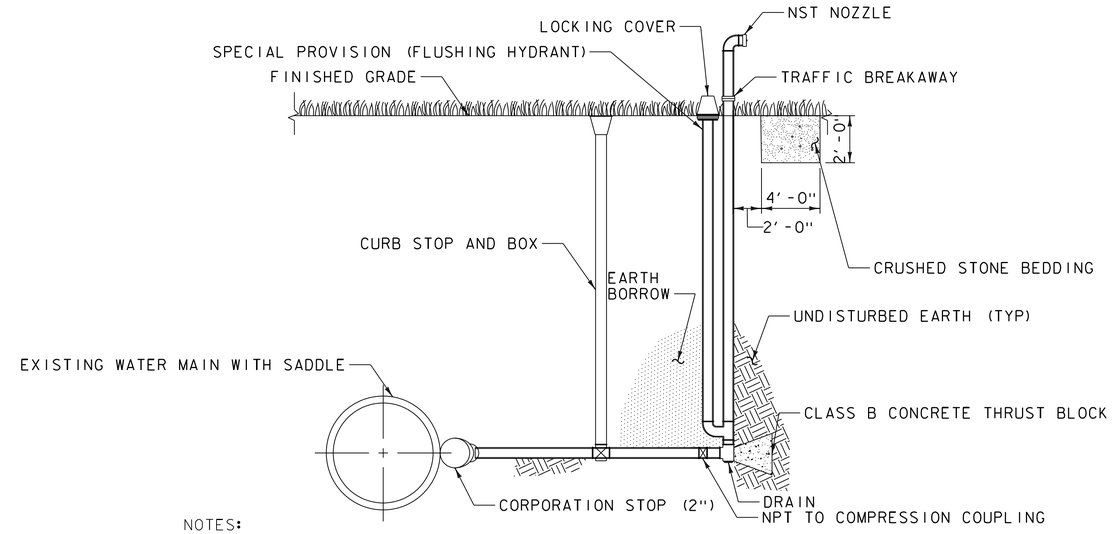

NOTES:

1. POST HYDRANTS SHALL BE SELF-DRAINING TYPE (UNLESS IN AREA OF HIGH GROUNDWATER) WITH 6' BURY DEPTH. THESE HYDRANTS SHALL BE FURNISHED WITH A HORIZONTAL INLET, A NON-TURNING OPERATION ROD, AND SHALL OPEN TO THE LEFT. ALL OF THE WORKING PARTS SHALL BE BRONZE-TO-BRONZE DESIGN, AND BE SERVICEABLE FROM ABOVE GRADE WITH NO DIGGING. THE OUTLET SHALL ALSO BE BRONZE AND BE 2-1/2" NST.
2. EARTH BORROW SHALL BE APPROVED BY THE ENGINEER PRIOR TO USE.
3. CURB STOP WITH EXTENSION SERVICE BOX, CORPORATION STOP, FITTINGS AND PIPE SHOWN HERE TO BE INCIDENTAL TO SPECIAL PROVISION (FLUSHING HYDRANT).
4. CRUSHED STONE BEDDING SHALL BE 1-1/2" (REFER TO TABLE 704.02C IN STANDARD SPECIFICATIONS

SPECIAL PROVISION (FLUSHING HYDRANT)
N.T.S

TABLE OF DIMENSIONS

BENDS	B	C	D	E	F	BENDS	B	C	D	E	F
6" 11 ¼°	8"	15"	12"	24"	12"	6" 45°	8"	30"	12"	24"	14"
6" 22 ½°	"	19"	"	"	13"	6" 90°	"	30"	"	"	27"
8" 11 ¼°	"	20"	"	"	12"	8" 45°	"	30"	"	"	24"
8" 22 ½°	"	22"	"	"	17"	8" 90°	"	38"	"	"	36"
12" 11 ¼°	"	30"	"	"	15"	12" 45°	"	40"	"	"	40"
12" 22 ½°	"	35"	"	"	25"	12" 90°	"	60"	"	"	52"

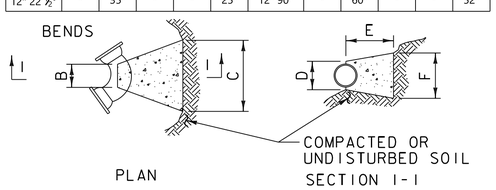

TABLE OF DIMENSIONS

TEES	G	H	I	J	TEES	G	H	I	J
6"X6"X6"	12"	24"	24"	18"	12"X12"X6"	12"	24"	24"	18"
8"X8"X6"	"	"	"	"	12"X12"X8"	"	"	"	24"
8"X8"X8"	"	"	"	24"	12"X12"X12"	"	36"	"	36"

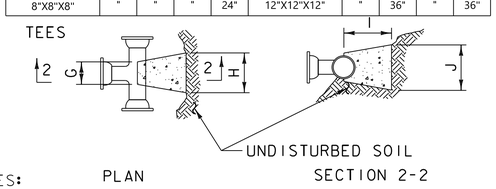

NOTES:

1. PROVIDE BLOCKS FOR TAPPING SLEEVES, DEAD ENDS, GATE VALVES, AND VERTICAL BENDS (SAME SIZE AS REQUIRED FOR TEES). PROVIDE ANCHOR RODS AT VERTICAL BENDS AND GATE VALVES.
2. CONCRETE SHALL NOT BE PLACED AGAINST PIPE BEYOND FITTING.
3. CONCRETE SHALL BE 3,000 PSI-TYPE I.

CONCRETE THRUST BLOCK
N.T.S

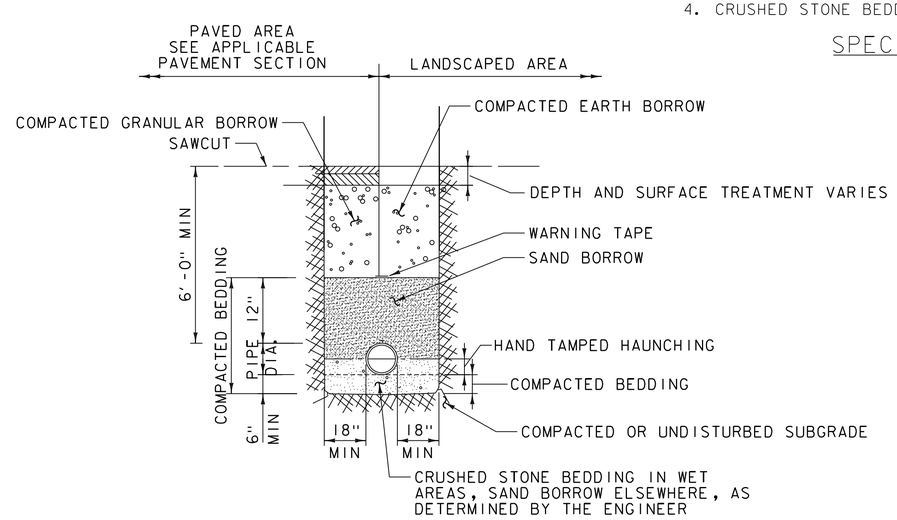

NOTES:

1. WHERE UTILITY TRENCHES ARE CONSTRUCTED THROUGH DETENTION BASIN BERMS OR OTHER SUCH SPECIAL SECTIONS, PLACE TRENCH BACKFILL WITH MATERIALS SIMILAR TO THE SPECIAL SECTION REQUIREMENTS.
2. USE METALLIC WARNING TAPE OVER ALL PIPES.
3. BEDDING TO PROVIDE A FIRM, STABLE, CONTINUOUS, AND UNIFORM SUPPORT FOR THE FULL LENGTH OF THE PIPE.
4. NO MECHANICAL TAMPERS SHALL BE USED DIRECTLY OVER THE PIPE TO ENSURE PIPE IS NOT DAMAGED.
5. DUCTILE IRON WATERLINE SHALL BE POLYETHYLENE ENCASED WHERE INSTALLED SUBSURFACE.
6. CRUSHED STONE BEDDING SHALL BE 3/4" (REFER TO TABLE 704.02B IN THE STANDARD SPECIFICATIONS).

WATERLINE TRENCH
N.T.S

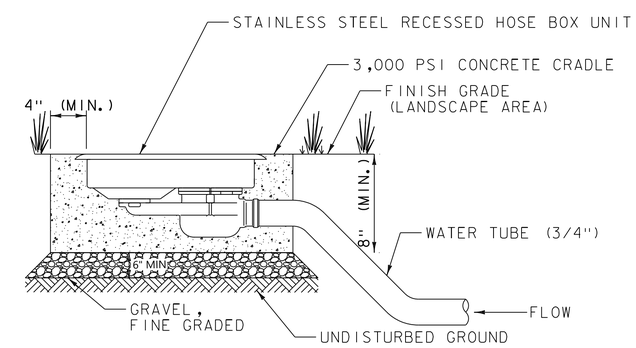

NOTES:

1. MAINTAIN POSITIVE SLOPE ON SEAMLESS COPPER WATER TUBE FROM VAULT TO HOSE BIB UNIT FOR WINTERIZATION

SPECIAL PROVISION (RECESSED HOSE BIB BOX UNIT)
N.T.S

PROJECT NAME: MIDDLEBURY	
PROJECT NUMBER: WCRS(23)	
FILE NAME: zl3g542details_util.dgn	PLOT DATE: 4/30/2019
PROJECT LEADER: A.P. GUYETTE	DRAWN BY: R.E. MARVIN
DESIGNED BY: A.P. GUYETTE	CHECKED BY: J.M. DUFFY
DRAINAGE & UTILITY DETAILS (4 OF 5)	SHEET 140 OF 328

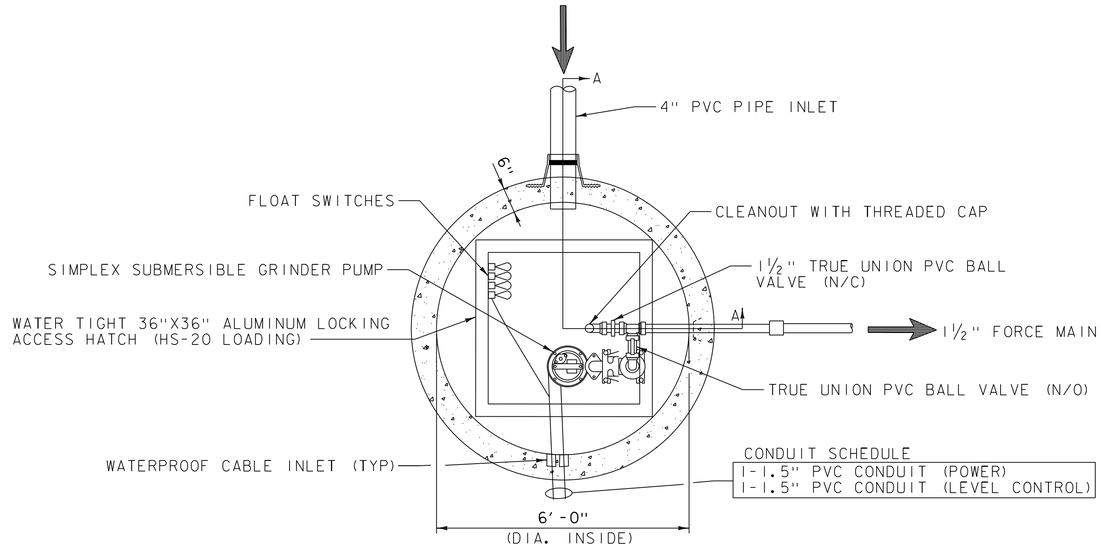

PUMP STATION PLAN

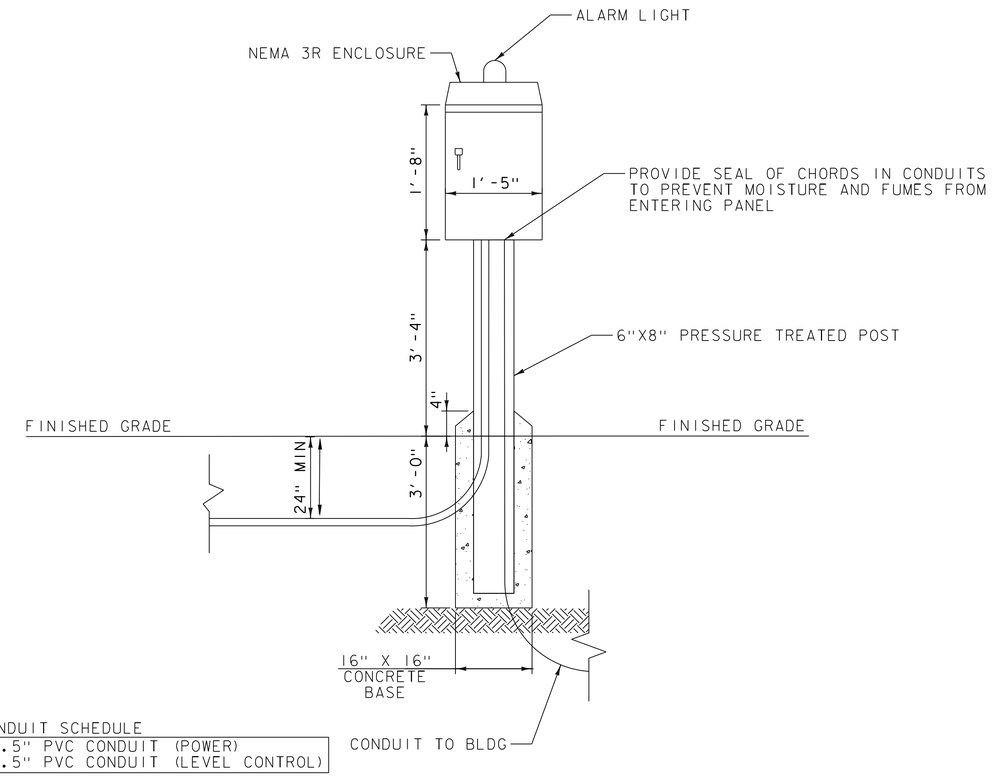

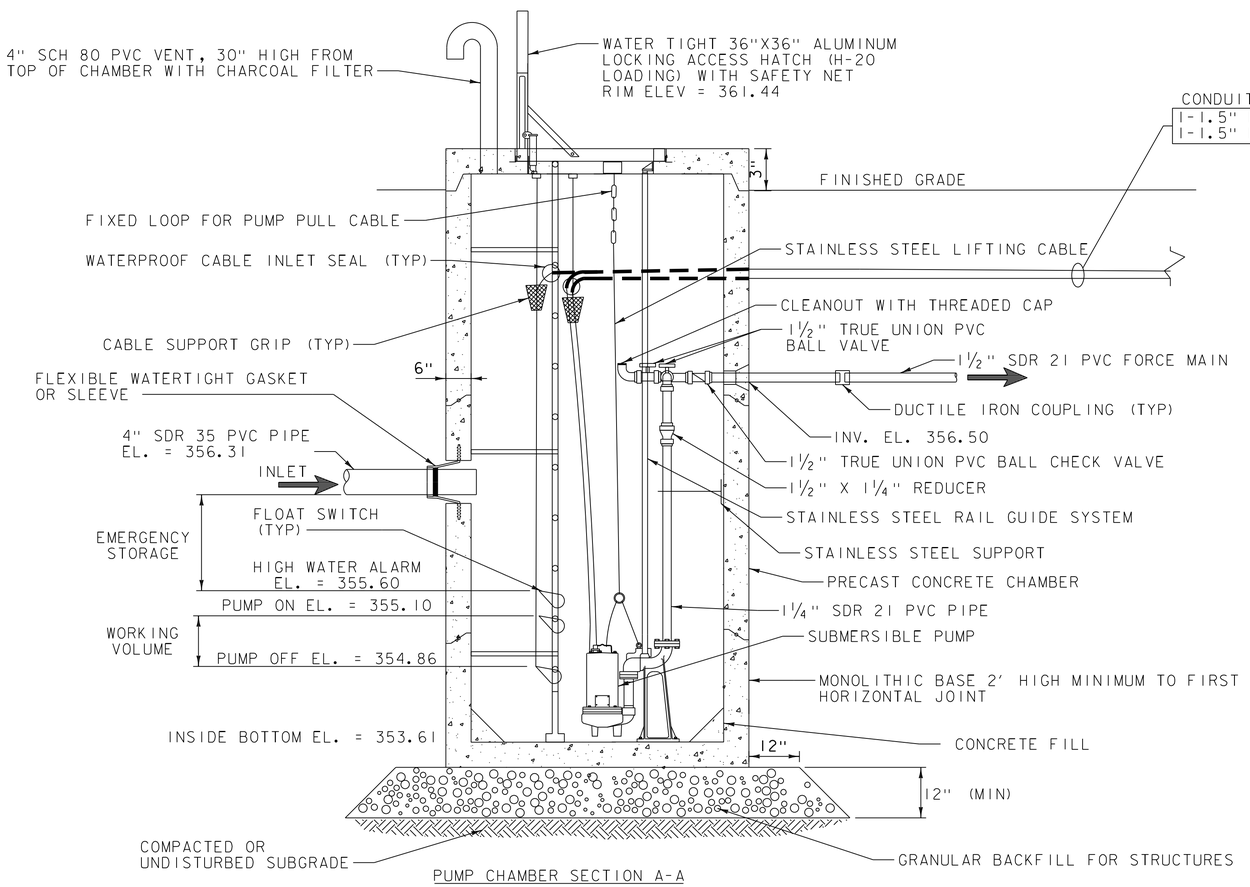

PUMP CHAMBER SECTION A-A

PUMP CRITERIA

INSTALL ONE SUBMERSIBLE GRINDER PUMP WITH THE FOLLOWING CAPABILITIES:
- RATED FOR CLASS 1, DIVISION 1, GROUP D USE
- INTENDED FOR PUMPING SANITARY SEWAGE
- MOUNTED ON NON-SPARKING BREAK AWAY FITTING
- 3-3/4" DIAMETER IMPELLER, STAINLESS STEEL SHAFT
- 2 H.P., 1-PHASE, 230 VOLT
- 3450 RPM WITH CONNECTION TO 1-1/4" DISCHARGE ON A LIFT OUT RAIL SYSTEM
- DESIGN POINT 18.5 GPM @ 36 FEET OF TOTAL DYNAMIC HEAD

ITEMS IN CONTROL PANEL:

1. PUMP CONTROLS
2. GFI 120 V RECEPTACLE AND RECEPTACLE BREAKER
3. MAIN DISCONNECT
4. GROUNDING
5. ALARM LIGHT
6. AUDIBLE ALARM HORN
7. LOCKABLE WITH PAD LOCK
8. 1-INCH O&M LOG AND INSPECTION RECORD SLEEVE
9. PANEL HEATER
10. MANUAL TRANSFER SWITCH FOR BACKUP GENERATOR POWER

SPECIAL PROVISION (SEWER PUMP STATION)

N.T.S

PROJECT NAME: MIDDLEBURY	
PROJECT NUMBER: WCRS(23)	
FILE NAME: zl3g542details_util.dgn	PLOT DATE: 4/30/2019
PROJECT LEADER: A.P. GUYETTE	DRAWN BY: R.E. MARVIN
DESIGNED BY: A.P. GUYETTE	CHECKED BY: J.M. DUFFY
DRAINAGE & UTILITY DETAILS (5 OF 5)	SHEET 141 OF 328

REMOVING SIGNS
STA. 200+40, RT
STA. 200+50, LT (3)
STA. 200+57, RT
STA. 200+64, RT
STA. 201+09, LT
STA. 201+13, RT
STA. 201+29, RT
STA. 202+03, RT
STA. 202+64, RT (2)
STA. 203+06, RT
STA. 203+23, RT
STA. 203+25, RT
STA. 203+45, LT
STA. 204+16, RT (4)
STA. 204+43, LT
STA. 300+48, LT
STA. 301+13, LT (4)
STA. 301+16, LT
STA. 301+24, RT

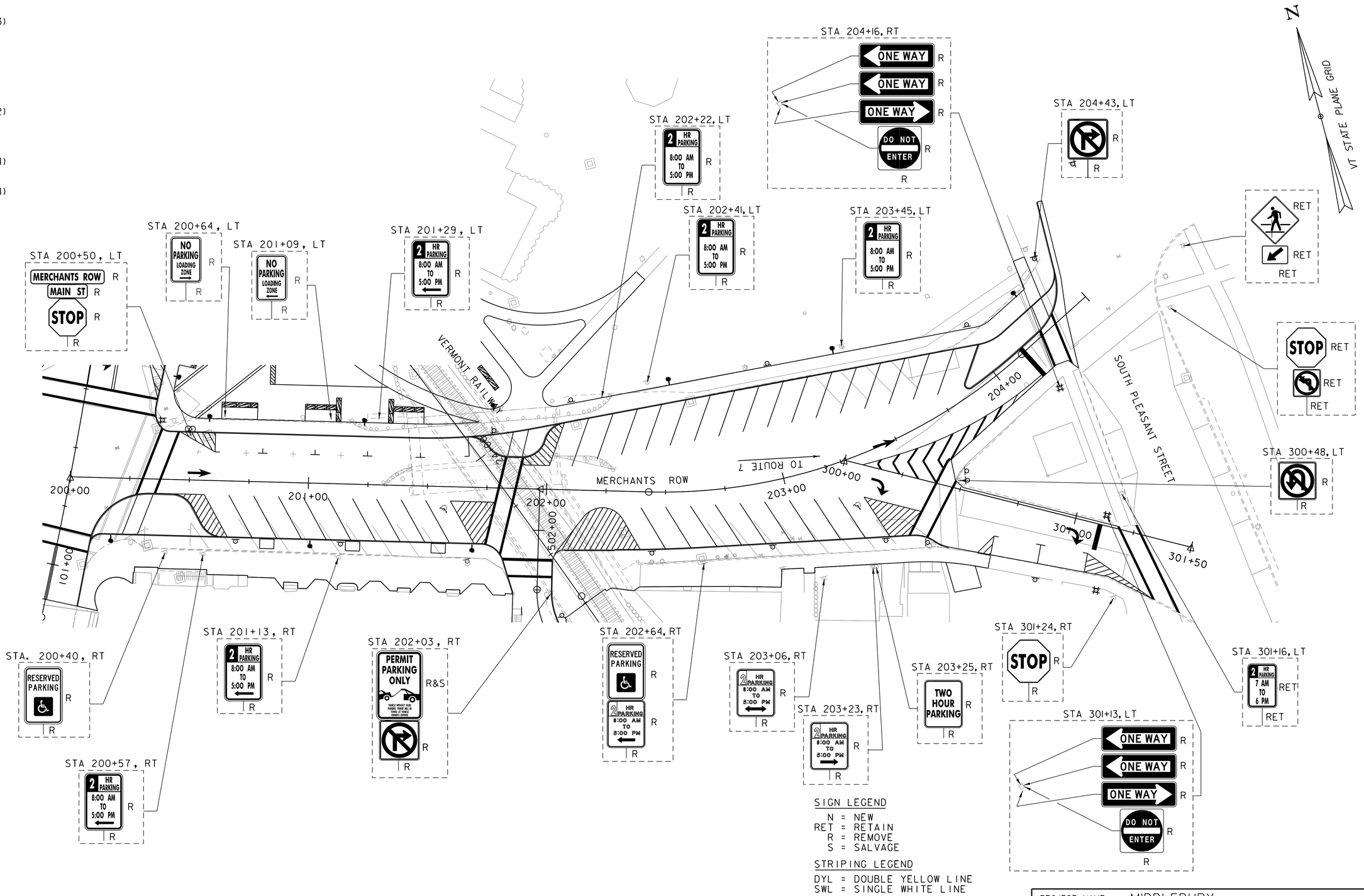

SIGN LEGEND
N = NEW
RET = RETAIN
R = REMOVE
S = SALVAGE

STRIPING LEGEND
DYL = DOUBLE YELLOW LINE
SWL = SINGLE WHITE LINE

MERCHANTS ROW TRAFFIC SIGNS & LINE STRIPING

SCALE 1" = 20'-0"
20 0 20

vhb

PROJECT NAME: MIDDLEBURY	
PROJECT NUMBER: WCRS(23)	
FILE NAME: zl3g542tsl.dgn	PLOT DATE: 4/30/2019
PROJECT LEADER: A.P. GUYETTE	DRAWN BY: A.J. GOUDREAU
DESIGNED BY: A.J. GOUDREAU	CHECKED BY: VHB
TRAFFIC SIGNS & STRIPING SHEET (1 OF 5)	SHEET 142 OF 328

4 INCH WHITE LINE
STA. 200+43 - 200+66, RT (NO PARKING AREA)
STA. 200+46 - 200+60, LT (NO PARKING AREA)
STA. 200+60 - 201+67, LT (PARALLEL PARKING)
STA. 200+67 - 201+60, RT (DIAGONAL PARKING)
STA. 201+60 - 201+78, RT (NO PARKING AREA)
STA. 201+90 - 202+07, LT (NO PARKING AREA)
STA. 202+04 - 202+40, RT (NO PARKING AREA)
STA. 202+10 - 203+92, LT (DIAGONAL PARKING)
STA. 202+40 - 203+24, RT (DIAGONAL PARKING)
STA. 203+33 - 204+15, RT (SWL)
STA 300+08 - 300+39, BL (SWL)
STA. 300+12 - 300+36, RT (NO PARKING AREA)
STA. 300+64 - 300+69, RT (NO PARKING AREA)
STA. 300+69 - 301+08, RT (PARALLEL PARKING)
STA. 301+08 - 301+39, RT (NO PARKING AREA)

4 INCH YELLOW LINE
STA. 300+47 - 301+12, BL (SYL)

8 INCH WHITE LINE
STA. 203+33 - 204+02 (PAINTED GORE)

CROSSWALK MARKING
STA. 200+32 - 200+41, RT-LT
STA. 201+78 - 201+86, RT-LT
STA. 204+24 - 204+30, RT-LT
STA. 300+38 - 300+45, RT-LT
STA. 301+20 - 301+28, RT-LT
STA. 501+84, LT-RT

24 INCH STOP BAR
STA. 204+15, LT-RT
STA. 301+12, RT

DURABLE LETTER OR SYMBOL
STA. 200+54, LT (THRU ARROW)
STA. 201+57, RT (HCAP SYMBOL)
STA. 203+25, RT (HCAP SYMBOL)
STA. 203+45, BL (THRU ARROW)
STA. 300+15, RT (RIGHT ARROW)
STA. 301+00, RT (RIGHT ARROW)

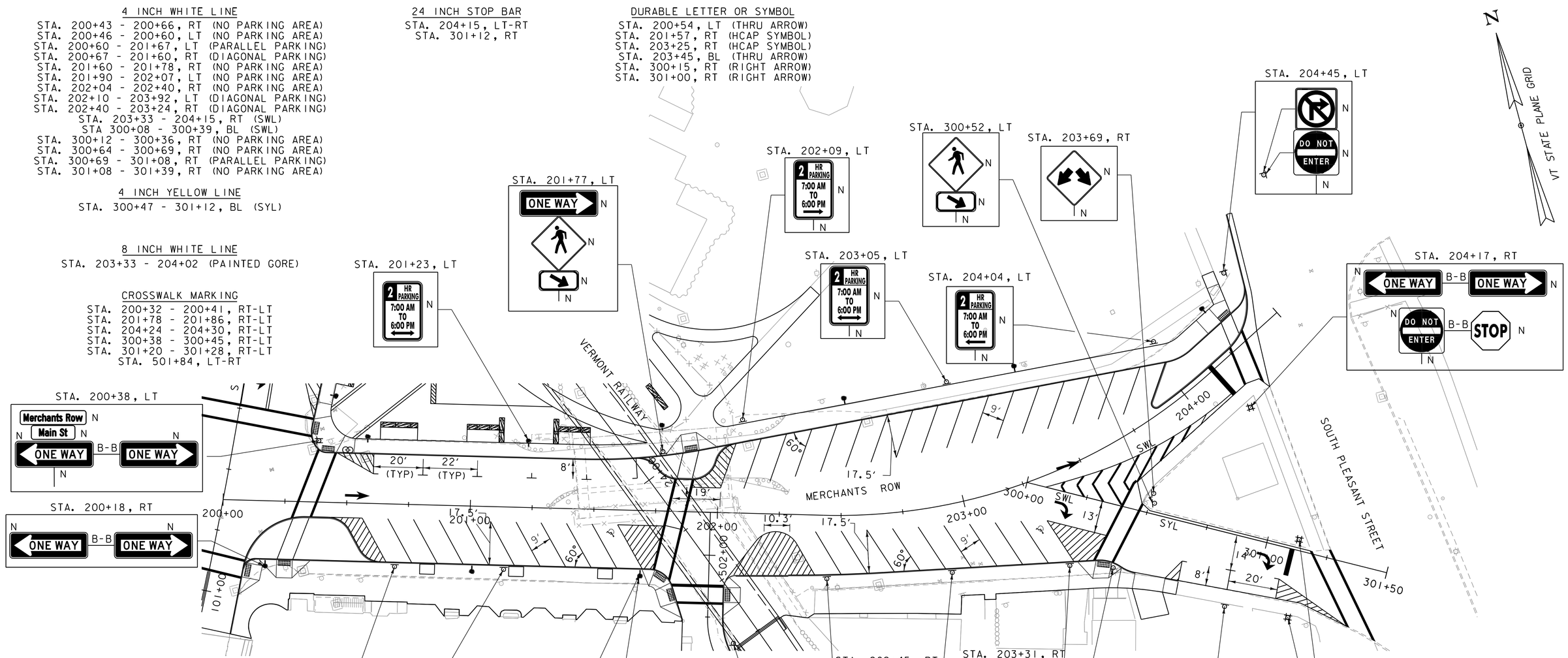

RESETTING SIGNS
STA. 202+08, RT

TRAFFIC SIGN, TYPE A
STA. 200+18, RT (2)
STA. 200+38, LT (4)
STA. 200+70, RT
STA. 201+14, RT
STA. 201+23, LT
STA. 201+69, RT (4)
STA. 201+77, LT (3)
STA. 202+08, RT
STA. 202+09, LT
STA. 202+45, RT
STA. 202+90, RT
STA. 203+05, LT
STA. 203+31, RT (2)
STA. 203+69, RT
STA. 204+04, LT
STA. 204+17, RT (4)
STA. 204+45, LT (2)
STA. 300+42, RT (2)
STA. 300+52, LT (2)
STA. 300+90, RT
STA. 301+12, LT (5)
STA. 301+16, RT (5)

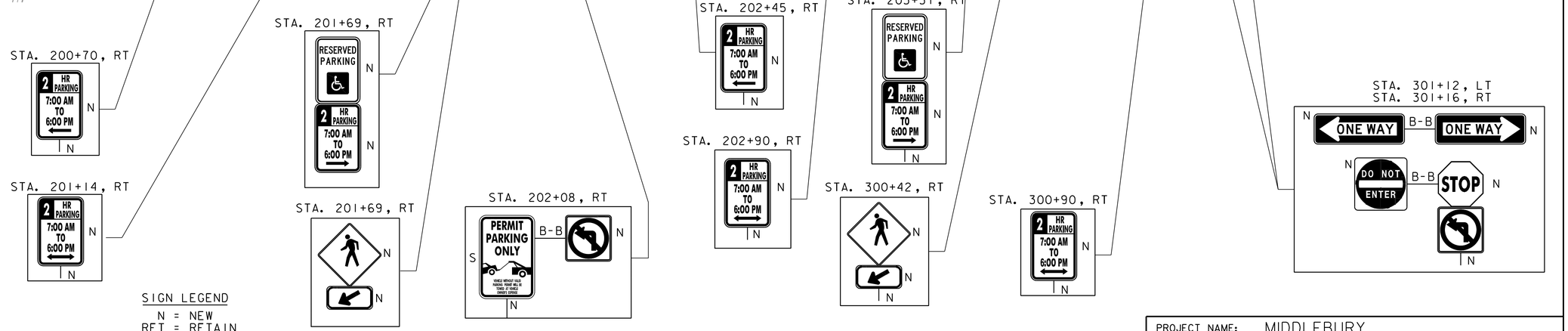

SIGN LEGEND
N = NEW
RET = RETAIN
R = REMOVE
S = SALVAGE

STRIPING LEGEND
SYL = SINGLE YELLOW LINE
SWL = SINGLE WHITE LINE

MERCHANTS ROW TRAFFIC SIGNS & LINE STRIPING

SCALE 1" = 20'-0"
20 0 20

vhb

PROJECT NAME: MIDDLEBURY	
PROJECT NUMBER: WCRS(23)	
FILE NAME: zl3g542tsl.dgn	PLOT DATE: 4/30/2019
PROJECT LEADER: A.P. GUYETTE	DRAWN BY: A.J. GOUDREAU
DESIGNED BY: A.J. GOUDREAU	CHECKED BY: VHB
TRAFFIC SIGNS & STRIPING SHEET (2 OF 5)	SHEET 143 OF 328

REMOVING SIGNS

STA. 21+22, 17 LT
STA. 101+90, 23 LT
STA. 102+39, 38 RT
STA. 103+17, 35 LT (2)
STA. 103+50, 39 LT
STA. 103+84, 45 RT
STA. 103+84, 48 LT
STA. 104+46, 47 RT
STA. 104+49, 39 RT
STA. 104+59, 35 LT (3)
STA. 104+76, 39 RT
STA. 104+80, 39 RT
STA. 105+50, 32 RT

RESETTING SIGNS

STA. 103+17, LT (2) TO STA. 103+19, LT (2)
STA. 103+17, LT TO STA. 113+20, LT

SIGN LEGEND

N = NEW
RET = RETAIN
R = REMOVE
S = SALVAGE
R&R = REMOVE & REPLACE

STRIPING LEGEND

DYL = DOUBLE YELLOW LINE
SWL = SINGLE WHITE LINE
SDL = SINGLE DOTTED WHITE LINE

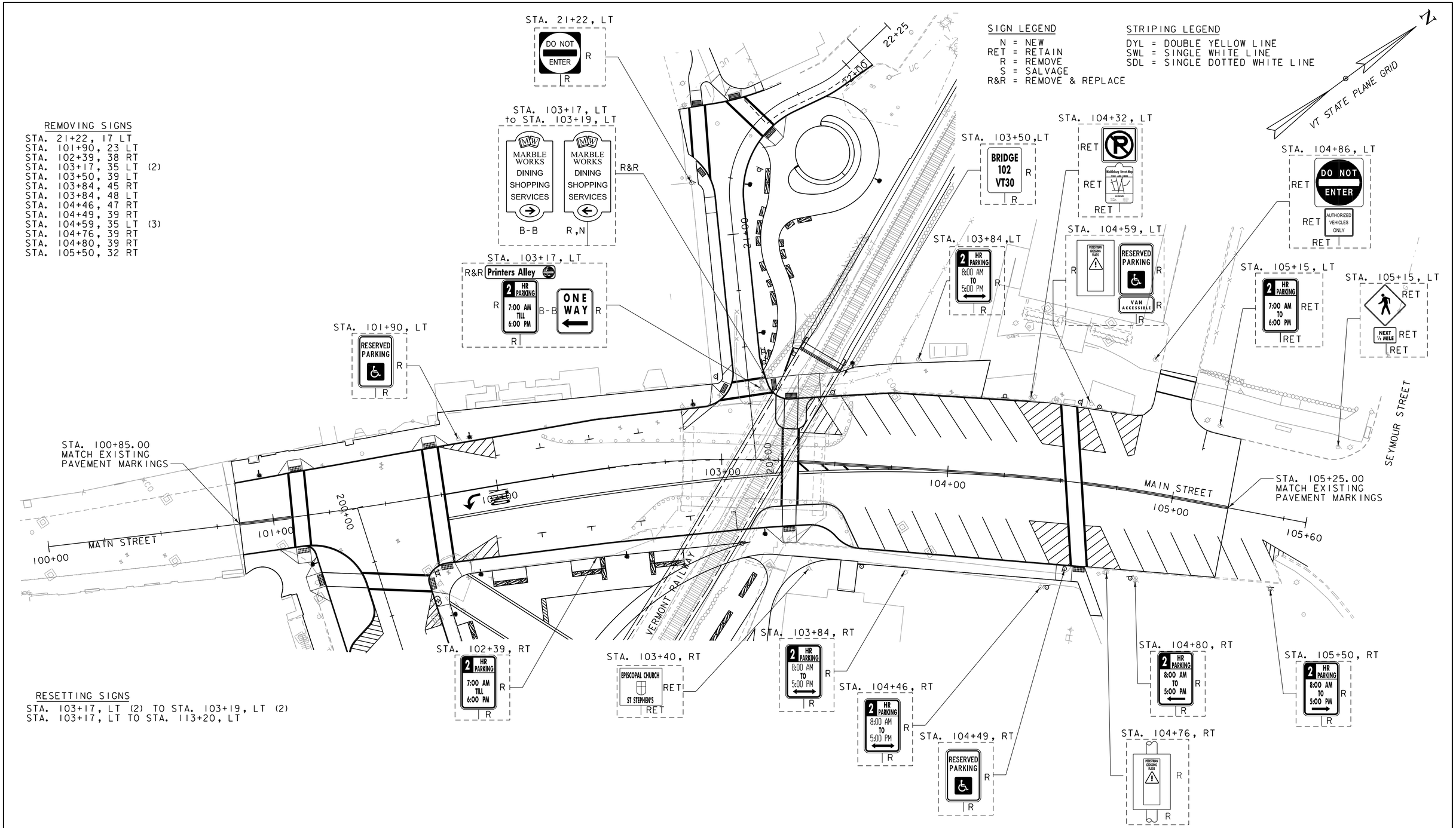

MAIN STREET TRAFFIC SIGNS & LINE STRIPING

SCALE 1" = 20'-0"
20 0 20

vhb

PROJECT NAME: MIDDLEBURY	
PROJECT NUMBER: WCRS(23)	
FILE NAME: zl3g542tsl.dgn	PLOT DATE: 4/30/2019
PROJECT LEADER: A.P. GUYETTE	DRAWN BY: A.J. GOUDREAU
DESIGNED BY: A.J. GOUDREAU	CHECKED BY: VHB
TRAFFIC SIGNS & STRIPING SHEET (3 OF 5)	SHEET 144 OF 328

TRAFFIC SIGN, TYPE A

STA. 20+47, RT (2)
STA. 21+22, LT
STA. 21+32, RT
STA. 101+86, RT
STA. 101+92, LT
STA. 102+79, LT
STA. 102+88, LT
STA. 103+17, LT
STA. 103+20, RT
STA. 103+47, LT
STA. 103+47, LT
STA. 103+65, RT
STA. 103+09, RT
STA. 104+23, LT
STA. 104+23, LT
STA. 104+49, RT
STA. 104+55, LT
STA. 104+57, RT
STA. 104+63, LT
STA. 104+88, RT
STA. 105+50, RT

4 INCH WHITE LINE

STA. 101+76 - 101+96, RT (NO PARKING AREA)
STA. 101+77 - 102+53, BL (SWL)
STA. 101+77 - 102+02, LT (NO PARKING AREA)
STA. 101+96 - 103+07, RT (PARALLEL PARKING)
STA. 102+02 - 102+84, LT (PARALLEL PARKING)
STA. 102+53 - 103+26, RT (SDL)
STA. 102+84 - 103+00, LT (NO PARKING AREA)
STA. 103+34 - 103+52, LT (NO PARKING AREA)
STA. 103+51 - 104+29, LT (DIAGONAL PARKING)
STA. 103+65 - 104+38, RT (DIAGONAL PARKING)
STA. 104+27 - 104+49, LT (NO PARKING AREA)
STA. 104+38 - 104+59, RT (NO PARKING AREA)
STA. 104+54 - 104+68, LT (NO PARKING AREA)
STA. 104+63 - 104+82, RT (NO PARKING AREA)
STA. 104+68 - 104+81, LT (NO PARKING AREA)
STA. 104+81 - 105+45, RT (DIAGONAL PARKING)
STA. 105+10, LT (PARALLEL PARKING)
STA. 105+43 - 105+60, RT (NO PARKING)

SIGN LEGEND

N = NEW
RET = RETAIN
R = REMOVE
S = SALVAGE
R&R = REMOVE & REPLACE

STRIPING LEGEND

DYL = DOUBLE YELLOW LINE
SWL = SINGLE WHITE LINE
SDL = SINGLE DOTTED WHITE LINE

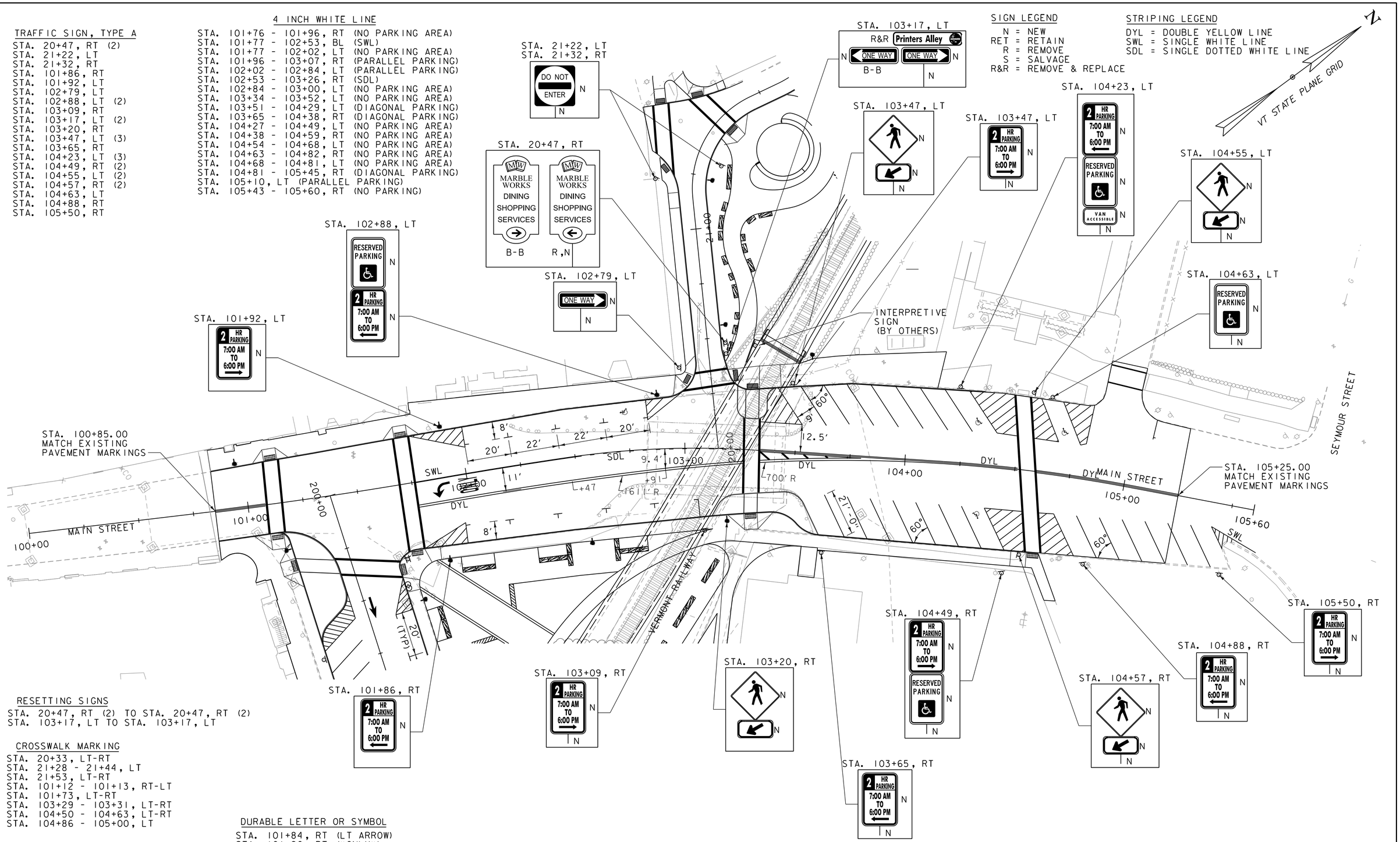

RESETTING SIGNS

STA. 20+47, RT (2) TO STA. 20+47, RT (2)
STA. 103+17, LT TO STA. 103+17, LT

CROSSWALK MARKING

STA. 20+33, LT-RT
STA. 21+28 - 21+44, LT
STA. 21+53, LT-RT
STA. 101+12 - 101+13, RT-LT
STA. 101+73, LT-RT
STA. 103+29 - 103+31, LT-RT
STA. 104+50 - 104+63, LT-RT
STA. 104+86 - 105+00, LT

4 INCH YELLOW LINE

STA. 100+85 - 101+08, BL (DYL)
STA. 101+76 - 103+26, RT (DYL)
STA. 103+34 - 104+51, RT & BL (DYL)
STA. 104+59 - 105+25, BL (DYL)

DURABLE LETTER OR SYMBOL

STA. 101+84, RT (LT ARROW)
STA. 101+96, RT ("ONLY")
STA. 102+74, LT (HCAP SYMBOL)
STA. 104+32, LT (HCAP SYMBOL)
STA. 104+34, RT (HCAP SYMBOL)
STA. 104+70, LT (HCAP SYMBOL)

MAIN STREET TRAFFIC SIGNS & LINE STRIPING

SCALE 1" = 20'-0"
20 0 20

PROJECT NAME: MIDDLEBURY	
PROJECT NUMBER: WCRS(23)	
FILE NAME: z13g542tsl.dgn	PLOT DATE: 4/30/2019
PROJECT LEADER: A.P. GUYETTE	DRAWN BY: A.J. GOUDREAU
DESIGNED BY: A.J. GOUDREAU	CHECKED BY: VHB
TRAFFIC SIGNS & STRIPING SHEET (4 OF 5)	SHEET 145 OF 328

4" WHITE LINE

STA. 500+70 - 500+80, LT (NO PARKING AREA)
STA. 500+73 - 501+14, LT (DIAGONAL PARKING)
STA. 501+14 - 501+25, LT (NO PARKING AREA)
STA. 500+73 - 501+04, LT (NO PARKING AREA)
STA. 500+90 - 501+42, LT (DIAGONAL PARKING)
STA. 500+01 - 500+40, LT (DIAGONAL PARKING)
STA. 500+01, LT (NO PARKING AREA)
STA. 500+01, LT (PARKING)

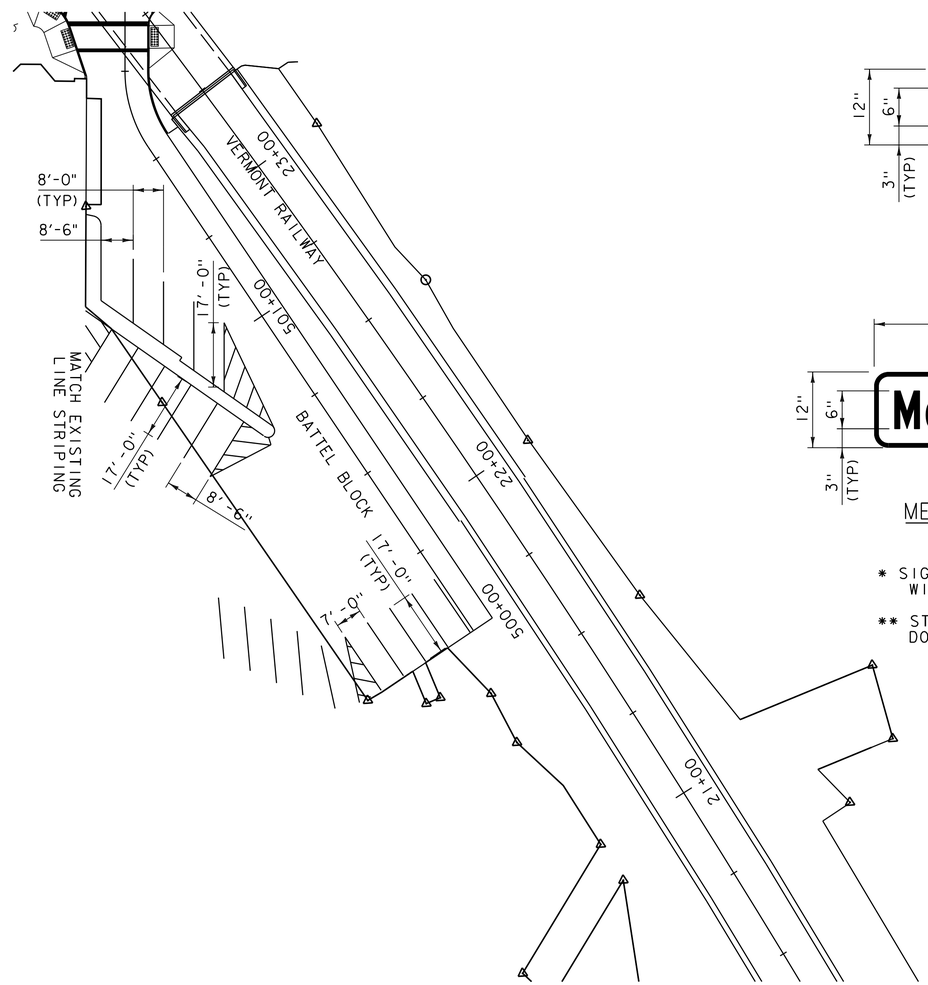

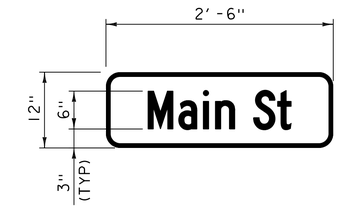

MAIN ST SIGN
NOT TO SCALE

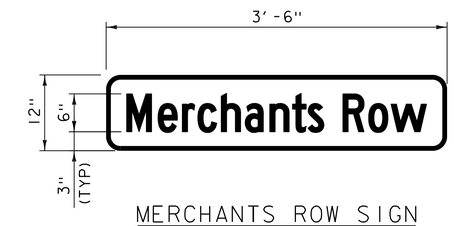

MERCHANTS ROW SIGN
NOT TO SCALE

* SIGN BACKGROUND SHALL BE GREEN WITH WHITE LETTERING

** STREET NAME SIGNS SHALL BE DOUBLE SIDED

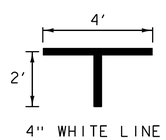

PARALLEL PARKING SPACE DETAIL
NOT TO SCALE

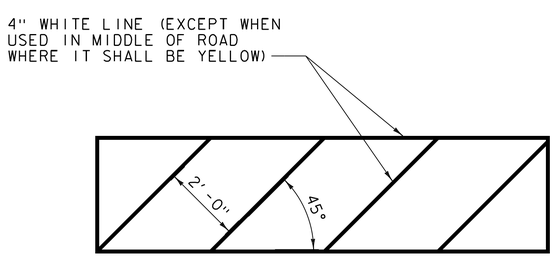

HATCHING PAVEMENT MARKING DETAIL
NOT TO SCALE

BATTEL BLOCK TRAFFIC SIGNS & LINE STRIPING

SCALE 1" = 20'-0"
20 0 20

PROJECT NAME: MIDDLEBURY	
PROJECT NUMBER: WCRS(23)	
FILE NAME: z13g542tsl.dgn	PLOT DATE: 4/30/2019
PROJECT LEADER: A.P. GUYETTE	DRAWN BY: A.J. GOUDREAU
DESIGNED BY: A.J. GOUDREAU	CHECKED BY: VHB
TRAFFIC SIGNS & STRIPING SHEET (5 OF 5)	SHEET 146 OF 328

STATE OF VERMONT
AGENCY OF TRANSPORTATION

TRAFFIC SIGN SUMMARY SHEET

MILE MARKER, STATION, OR SIGN NUMBER	SIGN LEGEND	SIGN DIMENSIONS EA	WIDTH (IN)	HEIGHT (IN)	NEW & SALVAGED SIGNS "A"	"B"	SALV SIGN	SALV TIS	EXIST POST RETAIN	SALVAGE	NEW SIGN POSTS NO. OF POSTS	FLANGED CHANNEL LB/FT 1.12	2.0	3.0	SQUARE STEEL (IN) LB/FT 1.75	2.0	2.5	ANCHOR	SLEEVE	TUBULAR ALUMINUM Ø (IN) LB/FT 3.0	4.0	4.0 MOD	FOUND-ATION	TUBULAR STEEL Ø (IN) LB/FT 3.0	3.5	4.0	5.0	W-SHAPE STEEL FTG. SIZE 24"	30"	WEIGHT	POST SIZE	SIGN FRAME REQUIRED	REMARKS	SIGN DETAIL DETAIL ON SHEET NUMBER	STD. SHEET NUMBER
											OPTION ITEMS									1.3	1.7	1.7		7.6	9.0	10.8	14.6								
MERCHANTS ROW																																			
200+18, RT	ONE WAY	1	36	12	3.0																												R6-1R		SHSM
	ONE WAY	1	36	12	3.0																												R6-1L MOUNTED BACK TO BACK WITH R6-1R MOUNT ON LIGHT POST		SHSM
200+38, LT	Merchants Row	1	42	12	5.25																												WHITE ON GREEN USE 12" BRACKET D3-1 DOUBLE-SIDED SIGN AREA HAS BEEN		122
	Main St	1	30	12	3.75																												WHITE ON GREEN USE 12" BRACKET D3-1 MULTIPLIED BY 1.5		122
	ONE WAY	1	36	12	3.0						1					X		X	X														R6-1R		SHSM
	ONE WAY	1	36	12	3.0																												R6-1L MOUNTED BACK TO BACK WITH R6-1R		SHSM
201+69, RT 202+09, LT 203+31, RT	2 HR PARKING 7:00 AM TO 6:00 PM	3	12	18	4.5						1				X			X	X														R7-108R MOUNT ON LIGHT POST AT STA. 201+69, RT		SHSM
201+69, RT 203+31, RT	RESERVED PARKING	2	12	18	3.0																												R7-8 MOUNT ABOVE R7-108L AT STA 201+69, RT & 203+31, RT MOUNT ON LIGHT POST AT STA. 201+69, RT		SHSM
200+70, RT 202+45, RT 204+04, LT	2 HR PARKING 7:00 AM TO 6:00 PM	3	12	18	4.5						3				X			X	X														R7-108L		SHSM
201+14, RT 201+23, LT 202+90, RT 203+05, LT 300+90, RT	2 HR PARKING 7:00 AM TO 6:00 PM	5	12	18	7.5						4				X			X	X														R7-108 MOUNT ON LIGHT POST AT STA. 201+23, LT		SHSM
201+77, LT	ONE WAY	1	36	12	3.0																												R6-1R MOUNTED ABOVE W11-02 & W16-7PR AT STA 201+77 LT		SHSM
202+08, RT	PERMIT PARKING ONLY						1																										EXISTING SIGN MOUNT BACK TO BACK WITH R3-2		
		1	24	24	4.0						1				X			X	X														R3-2		SHSM
AVERAGE POST LENGTH = 15 FEET WHEN • APPEARS, ASSUME POST LENGTH OF 20 FEET. FINAL POST LENGTHS ARE TO BE DETERMINED IN THE FIELD. POST SIZES ARE COMPUTED BASED ON INFORMATION FURNISHED ON THE STANDARD SHEETS AND THE VTRANS "SIGN POST DESIGN GUIDELINE."											FT	FT	FT	FT 150	FT 15	FT		EA 10	LB	LB	LB		LB	LB	LB	LB								
	TOTALS				SF 47.5	SF	EA. 1	SF			FT				FT 165					LB			EA.	LB				EA.	EA.	LB					

PROJECT NAME: MIDDLEBURY
PROJECT NUMBER: WCRS(23)

FILE NAME: zl3g542tss.dgn
PROJECT LEADER: A.P. GUYETTE
DESIGNED BY: A.J. GOUDREAU
TRAFFIC SIGN SUMMARY SHEET (1 OF 4)

PLOT DATE: 4/30/2019
DRAWN BY: A.J. GOUDREAU
CHECKED BY: VHB
SHEET 147 OF 328

STATE OF VERMONT
AGENCY OF TRANSPORTATION

TRAFFIC SIGN SUMMARY SHEET

MILE MARKER, STATION, OR SIGN NUMBER	SIGN LEGEND	SIGN DIMENSIONS EA	SIGN DIMENSIONS WIDTH (IN)	SIGN DIMENSIONS HEIGHT (IN)	NEW & SALVAGED SIGNS "A"	NEW & SALVAGED SIGNS "B"	NEW & SALVAGED SIGNS SALV SIGN	NEW & SALVAGED SIGNS SALV TIS	EXIST POST RETAIN	EXIST POST SALVAGE	NEW SIGN POSTS NO. OF POSTS	FLANGED CHANNEL LB/FT 1.12	FLANGED CHANNEL LB/FT 2.0	FLANGED CHANNEL LB/FT 3.0	SQUARE STEEL (IN) LB/FT 1.75	SQUARE STEEL (IN) LB/FT 2.0	SQUARE STEEL (IN) LB/FT 2.5	ANCHOR	SLEEVE	TUBULAR ALUMINUM Ø (IN) LB/FT 3.0	TUBULAR ALUMINUM Ø (IN) LB/FT 4.0	TUBULAR ALUMINUM Ø (IN) LB/FT 4.0 MOD	FOUND-ATION	TUBULAR STEEL Ø (IN) LB/FT 3.0	TUBULAR STEEL Ø (IN) LB/FT 3.5	TUBULAR STEEL Ø (IN) LB/FT 4.0	TUBULAR STEEL Ø (IN) LB/FT 5.0	W-SHAPE STEEL FTG. SIZE 24"	W-SHAPE STEEL FTG. SIZE 30"	W-SHAPE STEEL WEIGHT	W-SHAPE STEEL POST SIZE	SIGN FRAME REQUIRED	REMARKS	SIGN DETAIL DETAIL ON SHEET NUMBER	SIGN DETAIL STD. SHEET NUMBER
											OPTION ITEMS																									
MERCHANTS ROW																																				
201+69, RT 300+42, RT		2 2	36 24	36 12	18.0 4.0						1					X		X	X														W11-2 W16-7PL MOUNT ON LIGHT POST AT STA. 201+69, RT		SHSM SHSM
201+77, LT 300+52, LT		2 2	36 24	36 12	18.0 4.0						2					X		X	X														W11-2 W16-7PR		SHSM SHSM
203+69, RT		1	36	36	9.0						1					X		X	X														W11-2		SHSM
204+45, LT		1 1	30 24	30 24	6.25 4.0						1				X	X		X	X														R5-1 R3-1		SHSM SHSM
204+17, RT 301+12, LT 301+16, RT		3 3 3 3	36 36 30 36	12 12 30 36	9.0 9.0 18.75 27.0						3					X		X*	X														R6-1L R6-1R MOUNTED BACK TO BACK WITH R6-1L R5-1 R1-1 MOUNTED BACK TO BACK WITH R5-1		SHSM SHSM SHSM SHSM
301+12, LT 201+16, RT		2	24	24	8.0																												R3-2 MOUNT BELOW R1-1 AT STA. 300+12, LT & 300+16, RT		SHSM
AVERAGE POST LENGTH = 15 FEET WHEN * APPEARS, ASSUME POST LENGTH OF 20 FEET. FINAL POST LENGTHS ARE TO BE DETERMINED IN THE FIELD. POST SIZES ARE COMPUTED BASED ON INFORMATION FURNISHED ON THE STANDARD SHEETS AND THE VTRANS "SIGN POST DESIGN GUIDELINE."											FT	FT	FT	FT 15	FT 120	FT		EA 8	LB	LB	LB		LB	LB	LB	LB								
	TOTALS				SF 135.0	SF	EA.	SF			FT			FT 135					LB			EA.	LB				EA.	EA.	LB					

PROJECT NAME: MIDDLEBURY
PROJECT NUMBER: WCRS(23)

FILE NAME: zl3g542tss.dgn
PROJECT LEADER: A.P. GUYETTE
DESIGNED BY: A.J. GOUDREAU
TRAFFIC SIGN SUMMARY SHEET (2 OF 4)

PLOT DATE: 4/30/2019
DRAWN BY: A.J. GOUDREAU
CHECKED BY: VHB
SHEET 148 OF 328

STATE OF VERMONT
AGENCY OF TRANSPORTATION

TRAFFIC SIGN SUMMARY SHEET

MILE MARKER, STATION, OR SIGN NUMBER	SIGN LEGEND	SIGN DIMENSIONS EA	WIDTH (IN)	HEIGHT (IN)	NEW & SALVAGED SIGNS "A"	"B"	SALV SIGN	SALV TIS	EXIST POST RETAIN	SALVAGE	NEW SIGN POSTS NO. OF POSTS	FLANGED CHANNEL LB/FT 1.12	2.0	3.0	SQUARE STEEL (IN) LB/FT 1.75 1.88	2.0 2.42	2.5 3.35	ANCHOR	SLEEVE	TUBULAR ALUMINUM Ø (IN) LB/FT 3.0 1.3	4.0 1.7	4.0 MOD 1.7	FOUND-ATION	TUBULAR STEEL Ø (IN) LB/FT 3.0 7.6	3.5 9.0	4.0 10.8	5.0 14.6	W-SHAPE STEEL FTG. SIZE 24"	30"	WEIGHT	POST SIZE	SIGN FRAME REQUIRED	REMARKS	SIGN DETAIL DETAIL ON SHEET NUMBER	STD. SHEET NUMBER
											OPTION ITEMS																								
MAIN ST																																			
101+86, RT 102+88, LT 103+65, RT 104+23, LT 104+88, RT		5	12	18	7.5						3				X			X	X														R7-108L		SHSM
101+92, LT 103+09, RT 103+47, LT 104+49, RT 105+50, RT		5	12	18	7.5						4				X			X	X														R7-108R		SHSM
104+23, LT		1	12	6	0.5																												R7-8A (MOUNT BELOW R7-8 AND R7-108L)		SHSM
102+88, LT 104+23, LT 104+49, RT 104+63, LT		4	12	18	6.0						1				X			X	X														R7-8 MOUNT ABOVE AND BELOW R7-108L AT STA. 102+88, LT, 104+23, LT, & 104+49, RT MOUNT ON LIGHT POST AT STA. 102+88, LT		SHSM
103+20, RT 103+47, LT 104+55, LT 104+57, RT		4 4	36 24	36 12	36.0 8.0						2					X		X	X														W11-2 W16-7P MOUNT ON SAME POST AS R7-108R STA. 103+47, LT		SHSM SHSM
102+79, LT		1	36	12	3						1					X		X	X														R6-1R		
103+17, LT		1	36	12	3.00		1				1					X		X	X														WAYFINDING STREET SIGN WOB R6-1R		SHSM
103+17, LT		1	36	12	3.00																												R6-1L MOUNT BELOW R6-1R		SHSM
AVERAGE POST LENGTH = 15 FEET WHEN • APPEARS, ASSUME POST LENGTH OF 20 FEET. FINAL POST LENGTHS ARE TO BE DETERMINED IN THE FIELD. POST SIZES ARE COMPUTED BASED ON INFORMATION FURNISHED ON THE STANDARD SHEETS AND THE VTRANS "SIGN POST DESIGN GUIDELINE."											FT	FT	FT	FT 120	FT 60	FT		EA 12	LB	LB	LB		LB	LB	LB	LB							
	TOTALS				SF 74.5	SF	EA. 1	SF			FT				FT 180					LB			EA.	LB				EA.	EA.	LB				

PROJECT NAME: MIDDLEBURY
PROJECT NUMBER: WCRS(23)

FILE NAME: zl3g542tss.dgn
PROJECT LEADER: A.P. GUYETTE
DESIGNED BY: A.J. GOUDREAU
TRAFFIC SIGN SUMMARY SHEET (3 OF 4)

PLOT DATE: 4/30/2019
DRAWN BY: A.J. GOUDREAU
CHECKED BY: VHB
SHEET 149 OF 328

STATE OF VERMONT
AGENCY OF TRANSPORTATION

TRAFFIC SIGN SUMMARY SHEET

MILE MARKER, STATION, OR SIGN NUMBER	SIGN LEGEND	SIGN DIMENSIONS EA	SIGN DIMENSIONS WIDTH (IN)	SIGN DIMENSIONS HEIGHT (IN)	NEW & SALVAGED SIGNS "A"	NEW & SALVAGED SIGNS "B"	NEW & SALVAGED SIGNS SALV SIGN	NEW & SALVAGED SIGNS SALV TIS	EXIST POST RETAIN	EXIST POST SALVAGE	NEW SIGN POSTS NO. OF POSTS	FLANGED CHANNEL LB/FT 1.12	FLANGED CHANNEL LB/FT 2.0	FLANGED CHANNEL LB/FT 3.0	SQUARE STEEL (IN) LB/FT 1.75	SQUARE STEEL (IN) LB/FT 2.0	SQUARE STEEL (IN) LB/FT 2.5	ANCHOR	SLEEVE	TUBULAR ALUMINUM Ø (IN) LB/FT 3.0	TUBULAR ALUMINUM Ø (IN) LB/FT 4.0	TUBULAR ALUMINUM Ø (IN) LB/FT 4.0 MOD	FOUND-ATION	TUBULAR STEEL Ø (IN) LB/FT 3.0	TUBULAR STEEL Ø (IN) LB/FT 3.5	TUBULAR STEEL Ø (IN) LB/FT 4.0	TUBULAR STEEL Ø (IN) LB/FT 5.0	W-SHAPE STEEL FTG. SIZE 24"	W-SHAPE STEEL FTG. SIZE 30"	W-SHAPE STEEL WEIGHT	W-SHAPE STEEL POST SIZE	SIGN FRAME REQUIRED	REMARKS	SIGN DETAIL DETAIL ON SHEET NUMBER	SIGN DETAIL STD. SHEET NUMBER
											OPTION ITEMS																								
PRINTER'S ALLY																																			
21+22, LT 21+32, RT		2	30	30	12.5						2					X		X	X													R5-1		SHSM
20+47, RT							1				1					X		X	X													WAYFINDING SIGN		
20+47, RT							1																									WAYFINDING SIGN (NOTE: MOUNT BACK TO BACK WITH WAYFINDING SIGN)		
AVERAGE POST LENGTH = 15 FEET WHEN • APPEARS, ASSUME POST LENGTH OF 20 FEET. FINAL POST LENGTHS ARE TO BE DETERMINED IN THE FIELD. POST SIZES ARE COMPUTED BASED ON INFORMATION FURNISHED ON THE STANDARD SHEETS AND THE VTRANS "SIGN POST DESIGN GUIDELINE."											FT	FT	FT	FT	FT 45	FT		EA 3	LB	LB	LB		LB	LB	LB	LB								
	TOTALS (4 OF 4)	SF 12.5	SF	EA. 2	SF						FT 30					FT			LB			EA.	LB				EA.	EA.	LB					
	TOTALS (3 OF 4)	SF 74.5	SF	EA. 1	SF						FT 180					FT			LB			EA.	LB				EA.	EA.	LB					
	TOTALS (2 OF 4)	SF 135.0	SF	EA.	SF						FT 135					FT			LB			EA.	LB				EA.	EA.	LB					
	TOTALS (1 OF 4)	SF 47.5	SF	EA. 1	SF						FT 165					FT			LB			EA.	LB				EA.	EA.	LB					
	TOTALS	SF 269.5	SF	EA. 4	SF						FT 510					FT			LB			EA.	LB				EA.	EA.	LB					

NOTE: AREAS GIVEN FOR DOUBLE-SIDED SIGNS ON THE SIGN SUMMARY SHEETS HAVE BEEN MULTIPLIED BY A PAY FACTOR OF 1.5 AS REQUIRED PER SUBSECTION 675.10. THE ACTUAL PHYSICAL DIMNSIONS ARE GIVEN ON THE SIGN DETAIL SHEETS. THE QUANTITY SHEET TOTALS FOR ITEM 675.20 ALSO INCORPORATE THE PAY FACTOR OF 1.5 FOR DOUBLE SIDED SIGNS.

vhb

PROJECT NAME: MIDDLEBURY
PROJECT NUMBER: WCRS(23)

FILE NAME: zl3g542tss.dgn
PROJECT LEADER: A.P. GUYETTE
DESIGNED BY: A.J. GOUDREAU
TRAFFIC SIGN SUMMARY SHEET (4 OF 4)
PLOT DATE: 4/30/2019
DRAWN BY: A.J. GOUDREAU
CHECKED BY: VHB
SHEET 150 OF 328

SOIL CLASSIFICATION

AASHTO	
A1	Gravel and Sand
A3	Fine Sand
A2	Silty or Clayey Gravel and Sand
A4	Silty Soil - Low Compressibility
A5	Silty Soil - Highly Compressible
A6	Clayey Soil - Low Compressibility
A7	Clayey Soil - Highly Compressible

ROCK QUALITY DESIGNATION

R.Q.D. (%)	ROCK DESCRIPTION
<25	Very Poor
25 to 50	Poor
51 to 75	Fair
76 to 90	Good
>90	Excellent

SHEAR STRENGTH

UNDRAINED SHEAR STRENGTH IN P.S.F.	CONSISTENCY
<250	Very Soft
250-500	Soft
500-1000	Med. Stiff
1000-2000	Stiff
2000-4000	Very Stiff
>4000	Hard

CORRELATION GUIDE OF "N" TO DENSITY/CONSISTENCY

DENSITY (GRANULAR SOILS)		CONSISTENCY (COHESIVE SOILS)	
N	DESCRIPTIVE TERM	N	DESCRIPTIVE TERM
<5	Very Loose	<2	Very Soft
5-10	Loose	2-4	Soft
11-24	Med. Dense	5-8	Med. Stiff
25-50	Dense	9-15	Stiff
>50	Very Dense	16-30	Very Stiff
		31-60	Hard
		>60	Very Hard

COMMONLY USED SYMBOLS

▼	Water Elevation
⊗	Standard Penetration Boring
⊕	Auger Boring
⊙	Rod Sounding
S	Sample
N	Standard Penetration Test Blow Count Per Foot For: 2" O.D. Sampler 1 3/8" I.D. Sampler Hammer Weight Of 140 Lbs. Hammer Fall Of 30"
VS	Field Vane Shear Test
US	Undisturbed Soil Sample
B	Blast
DC	Diamond Core
MD	Mud Drill
WA	Wash Ahead
HSA	Hollow Stem Auger
AX	Core Size 1 1/8"
BX	Core Size 1 5/8"
NX	Core Size 2 1/8"
M	Double Tube Core Barrel Used
LL	Liquid Limit
PL	Plastic Limit
PI	Plasticity Index
NP	Non Plastic
w	Moisture Content (Dry Wgt. Basis)
D	Dry
M	Moist
MTW	Moist To Wet
W	Wet
Sat	Saturated
Bo	Boulder
Gr	Gravel
Sa	Sand
Si	Silt
Cl	Clay
HP	Hardpan
Le	Ledge
NLTD	No Ledge To Depth
CNPF	Can Not Penetrate Further
TLOB	Top of Ledge Or Boulder
NR	No Recovery
Rec.	Recovery
%Rec.	Percent Recovery
RQD	Rock Quality Designation
CBR	California Bearing Ratio
<	Less Than
>	Greater Than
R	Refusal (N > 100)
VTSPG	NAD83 - See Note 7

COLOR

blk	Black	pnk	Pink
bl	Blue	pu	Purple
brn	Brown	rd	Red
dk	Dark	tn	Tan
gry	Gray	wh	White
gn	Green	yel	Yellow
lt	Light	mltc	Multicolored
or	Orange		

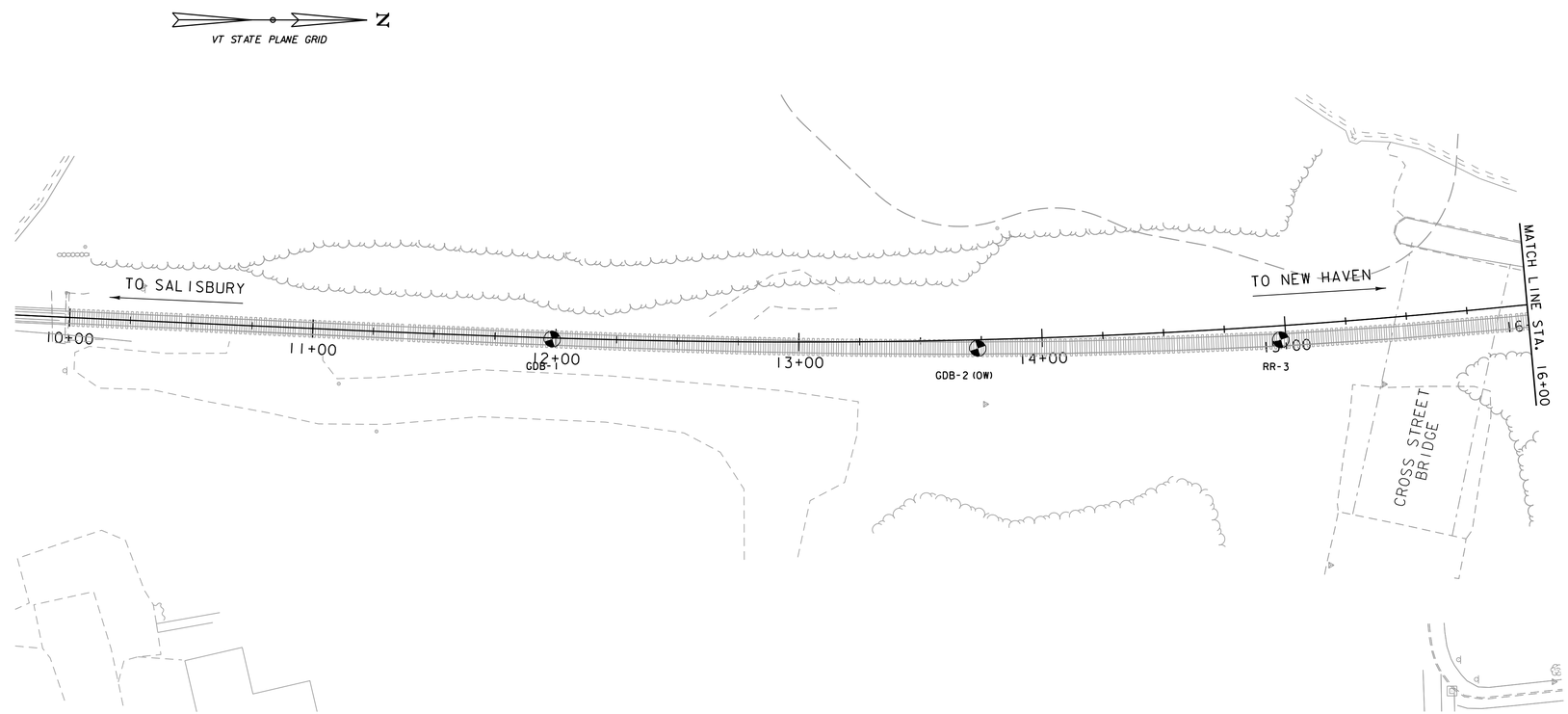

BORING LAYOUT

SCALE 1" = 30'-0"
30 0 30

BORING CHART

HOLE NO.	SURV. STATION	OFFSET	GROUND ELEV.	ELEV. TLOB	NORTHING	EASTING
GBD-1	11+98.54	0.38 RT	350.78'	N/A	551271.76	1464975.84
GBD-2(OW)	13+73.47	3.14 RT	351.24'	N/A	551446.76	1464979.44
RR-3	14+97.94	5.21 RT	351.06'	N/A	551571.35	1464975.76

DEFINITIONS (AASHTO)

BEDROCK (LEDGE) - Rock in its native location of indefinite thickness.

BOULDER - A rock fragment with an average dimension > 12 inches.

COBBLE - Rock fragments with an average dimension between 3 and 12 inches.

GRAVEL - Rounded particles of rock < 3" and > 0.0787" (#10 sieve).

SAND - Particles of rock < 0.0787" (#10 sieve) and > 0.0029" (#200 sieve).

SILT - Soil < 0.0029" (#200 sieve), non or slightly plastic and exhibits no strength when air-dried.

CLAY - Fine grained soil, exhibits plasticity when moist and considerable strength when air-dried.

VARVED - Alternate layers of silt and clay.

HARDPAN - Extremely dense soil, cemented layer, not softened when wet.

MUCK - Soft organic soil (containing > 10% organic material.

MOISTURE CONTENT - Weight of water divided by dry weight of soil.

FLOWING SAND - Granular soil so saturated (loose) that it flows into drill casing during extraction of wash rod.

STRIKE - Angle from magnetic north to line of intersection of bed with a horizontal plane.

DIP - Inclination of bed with a horizontal plane.

GENERAL NOTES

1. The subsurface explorations shown herein were made between March 2013 and December 2015 by GeoDesign, Inc.
2. Soil and rock classifications, properties and descriptions are based on engineering interpretation from available subsurface information by GeoDesign, Inc. and may not necessarily reflect actual variations in subsurface conditions that may be encountered between individual boring or sample locations.
3. Observed water levels and/or conditions indicated are as recorded at the time of exploration and may vary according to the prevailing rainfall, methods of exploration and other factors.
4. Engineering judgment was exercised in preparing the subsurface information presented herein. Analysis and interpretation of subsurface data was performed and interpreted for Agency design and estimating purposes. Presentation of the information in the Contract is intended to provide the Contractor access to the same data available to the Agency. The subsurface information is presented in good faith and is not intended as a substitute for personal investigation, independent interpretation, independent analysis or judgment by the Contractor.
5. Pictorial structure details shown on the boring plan layout or soils profile are for illustrative purposes only and may not accurately portray final contract details.
6. Terminology used on boring logs to describe the hardness, degree of weathering, and spacing of fractures, joints and other discontinuities in the bedrock is defined in the AASHTO Manual on Subsurface Investigations, 1988.
7. Northing and Easting coordinates are shown in Vermont State Plane Grid North American Datum 1983 in survey feet.
8. Boring logs are available in the geotechnical data report.

vhb

PROJECT NAME: MIDDLEBURY
PROJECT NUMBER: WCRS(23)

FILE NAME: zl3g542bor.dgn
PROJECT LEADER: A.P. GUYETTE
DESIGNED BY: GEODESIGN
BORING INFORMATION SHEET (1 OF 6)

PLOT DATE: 4/30/2019
DRAWN BY: C.J. HAKEY
CHECKED BY: GEODESIGN
SHEET 151 OF 328

SOIL CLASSIFICATION

AASHTO	
A1	Gravel and Sand
A3	Fine Sand
A2	Silty or Clayey Gravel and Sand
A4	Silty Soil - Low Compressibility
A5	Silty Soil - Highly Compressible
A6	Clayey Soil - Low Compressibility
A7	Clayey Soil - Highly Compressible

ROCK QUALITY DESIGNATION

R.Q.D. (%)	ROCK DESCRIPTION
<25	Very Poor
25 to 50	Poor
51 to 75	Fair
76 to 90	Good
>90	Excellent

SHEAR STRENGTH

UNDRAINED SHEAR STRENGTH IN P.S.F.	CONSISTENCY
<250	Very Soft
250-500	Soft
500-1000	Med. Stiff
1000-2000	Stiff
2000-4000	Very Stiff
>4000	Hard

CORRELATION GUIDE OF "N" TO DENSITY/CONSISTENCY

DENSITY (GRANULAR SOILS)		CONSISTENCY (COHESIVE SOILS)	
N	DESCRIPTIVE TERM	N	DESCRIPTIVE TERM
<5	Very Loose	<2	Very Soft
5-10	Loose	2-4	Soft
11-24	Med. Dense	5-8	Med. Stiff
25-50	Dense	9-15	Stiff
>50	Very Dense	16-30	Very Stiff
		31-60	Hard
		>60	Very Hard

COMMONLY USED SYMBOLS

▼	Water Elevation
⊗	Standard Penetration Boring
⊕	Auger Boring
⊙	Rod Sounding
S	Sample
N	Standard Penetration Test Blow Count Per Foot For: 2" O.D. Sampler 1 3/8" I.D. Sampler Hammer Weight Of 140 Lbs. Hammer Fall Of 30"
VS	Field Vane Shear Test
US	Undisturbed Soil Sample
B	Blast
DC	Diamond Core
MD	Mud Drill
WA	Wash Ahead
HSA	Hollow Stem Auger
AX	Core Size 1 1/8"
BX	Core Size 1 5/8"
NX	Core Size 2 1/8"
M	Double Tube Core Barrel Used
LL	Liquid Limit
PL	Plastic Limit
PI	Plasticity Index
NP	Non Plastic
w	Moisture Content (Dry Wgt. Basis)
D	Dry
M	Moist
MTW	Moist To Wet
W	Wet
Sat	Saturated
Bo	Boulder
Gr	Gravel
Sa	Sand
Si	Silt
Cl	Clay
HP	Hardpan
Le	Ledge
NLTD	No Ledge To Depth
CNPF	Can Not Penetrate Further
TLOB	Top of Ledge Or Boulder
NR	No Recovery
Rec.	Recovery
%Rec.	Percent Recovery
RQD	Rock Quality Designation
CBR	California Bearing Ratio
<	Less Than
>	Greater Than
R	Refusal (N > 100)
VTSPG	NAD83 - See Note 7

COLOR

blk	Black	pnk	Pink
bl	Blue	pu	Purple
brn	Brown	rd	Red
dk	Dark	tn	Tan
gry	Gray	wh	White
gn	Green	yel	Yellow
lt	Light	mltc	Multicolored
or	Orange		

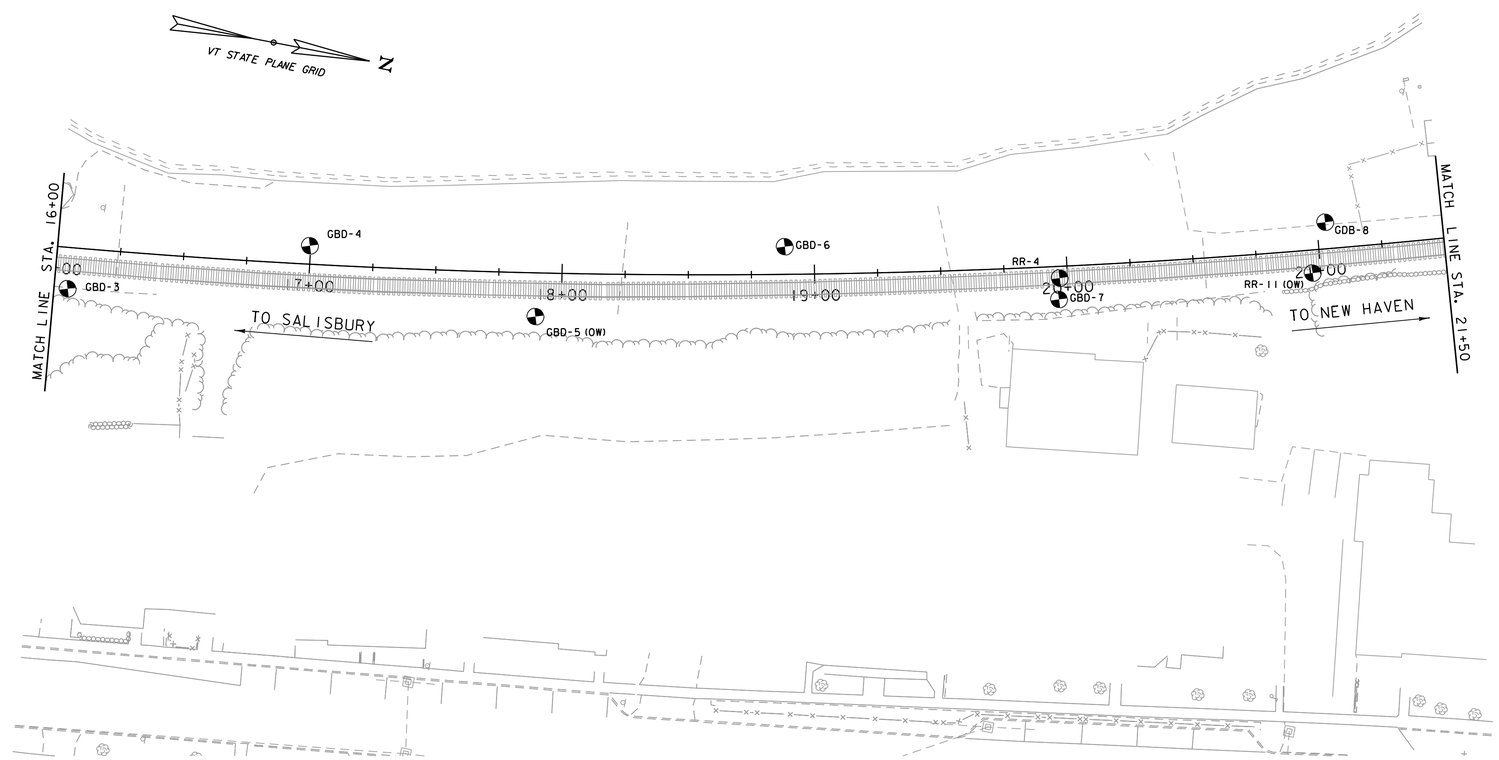

BORING LAYOUT

SCALE 1" = 30'-0"
30 0 30

BORING CHART

HOLE NO.	SURV. STATION	OFFSET	GROUND ELEV.	ELEV. TLOB	NORTHING	EASTING
GBD-3	16+05.36	15.68 RT	350.23'	N/A	551679.66	1464976.94
GBD-4	16+99.78	8.03 LT	349.48'	N/A	551770.66	1464942.04
GBD-5(OW)	17+89.97	16.55 RT	349.65'	N/A	551863.66	1464952.64
GBD-6	18+88.46	11.74 LT	349.07'	N/A	551955.36	1464906.74
GBD-7	19+96.41	12.31 RT	349.86'	N/A	552065.96	1464906.64
GBD-8	21+03.59	11.23 LT	349.86'	N/A	552163.66	1464856.64
RR-4	19+97.08	3.89 RT	350.23'	N/A	552064.62	1464898.30
RR-11(OW)	20+96.97	8.43 RT	350.50'	N/A	552162.61	1464877.36

DEFINITIONS (AASHTO)

BEDROCK (LEDGE) - Rock in its native location of indefinite thickness.

BOULDER - A rock fragment with an average dimension > 12 inches.

COBBLE - Rock fragments with an average dimension between 3 and 12 inches.

GRAVEL - Rounded particles of rock < 3" and > 0.0787" (#10 sieve).

SAND - Particles of rock < 0.0787" (#10 sieve) and > 0.0029" (#200 sieve).

SILT - Soil < 0.0029" (#200 sieve), non or slightly plastic and exhibits no strength when air-dried.

CLAY - Fine grained soil, exhibits plasticity when moist and considerable strength when air-dried.

VARVED - Alternate layers of silt and clay.

HARDPAN - Extremely dense soil, cemented layer, not softened when wet.

MUCK - Soft organic soil (containing > 10% organic material.

MOISTURE CONTENT - Weight of water divided by dry weight of soil.

FLOWING SAND - Granular soil so saturated (loose) that it flows into drill casing during extraction of wash rod.

STRIKE - Angle from magnetic north to line of intersection of bed with a horizontal plane.

DIP - Inclination of bed with a horizontal plane.

GENERAL NOTES

1. The subsurface explorations shown herein were made between March 2013 and December 2015 by GeoDesign, Inc.
2. Soil and rock classifications, properties and descriptions are based on engineering interpretation from available subsurface information by GeoDesign, Inc. and may not necessarily reflect actual variations in subsurface conditions that may be encountered between individual boring or sample locations.
3. Observed water levels and/or conditions indicated are as recorded at the time of exploration and may vary according to the prevailing rainfall, methods of exploration and other factors.
4. Engineering judgment was exercised in preparing the subsurface information presented herein. Analysis and interpretation of subsurface data was performed and interpreted for Agency design and estimating purposes. Presentation of the information in the Contract is intended to provide the Contractor access to the same data available to the Agency. The subsurface information is presented in good faith and is not intended as a substitute for personal investigation, independent interpretation, independent analysis or judgment by the Contractor.
5. Pictorial structure details shown on the boring plan layout or soils profile are for illustrative purposes only and may not accurately portray final contract details.
6. Terminology used on boring logs to describe the hardness, degree of weathering, and spacing of fractures, joints and other discontinuities in the bedrock is defined in the AASHTO Manual on Subsurface Investigations, 1988.
7. Northing and Easting coordinates are shown in Vermont State Plane Grid North American Datum 1983 in survey feet.
8. Boring logs are available in the geotechnical data report.

PROJECT NAME: MIDDLEBURY
PROJECT NUMBER: WCRS(23)

FILE NAME: zl3g542bor.dgn
PROJECT LEADER: A.P. GUYETTE
DESIGNED BY: GEODESIGN
BORING INFORMATION SHEET (2 OF 6)

PLOT DATE: 4/30/2019
DRAWN BY: C.J. HAKEY
CHECKED BY: GEODESIGN
SHEET 152 OF 328

SOIL CLASSIFICATION

AASHTO

A1	Gravel and Sand
A3	Fine Sand
A2	Silty or Clayey Gravel and Sand
A4	Silty Soil - Low Compressibility
A5	Silty Soil - Highly Compressible
A6	Clayey Soil - Low Compressibility
A7	Clayey Soil - Highly Compressible

ROCK QUALITY DESIGNATION

R.Q.D. (%)	ROCK DESCRIPTION
<25	Very Poor
25 to 50	Poor
51 to 75	Fair
76 to 90	Good
>90	Excellent

SHEAR STRENGTH

UNDRAINED SHEAR STRENGTH IN P.S.F.	CONSISTENCY
<250	Very Soft
250-500	Soft
500-1000	Med. Stiff
1000-2000	Stiff
2000-4000	Very Stiff
>4000	Hard

CORRELATION GUIDE OF "N" TO DENSITY/CONSISTENCY

DENSITY (GRANULAR SOILS)

N	DESCRIPTIVE TERM
<5	Very Loose
5-10	Loose
11-24	Med. Dense
25-50	Dense
>50	Very Dense

CONSISTENCY (COHESIVE SOILS)

N	DESCRIPTIVE TERM
<2	Very Soft
2-4	Soft
5-8	Med. Stiff
9-15	Stiff
16-30	Very Stiff
31-60	Hard
>60	Very Hard

COMMONLY USED SYMBOLS

▼	Water Elevation
⊗	Standard Penetration Boring
⊕	Auger Boring
⊙	Rod Sounding
S	Sample
N	Standard Penetration Test Blow Count Per Foot For: 2" O.D. Sampler 1 3/8" I.D. Sampler Hammer Weight Of 140 Lbs. Hammer Fall Of 30"
VS	Field Vane Shear Test
US	Undisturbed Soil Sample
B	Blast
DC	Diamond Core
MD	Mud Drill
WA	Wash Ahead
HSA	Hollow Stem Auger
AX	Core Size 1 1/8"
BX	Core Size 1 5/8"
NX	Core Size 2 1/8"
M	Double Tube Core Barrel Used
LL	Liquid Limit
PL	Plastic Limit
PI	Plasticity Index
NP	Non Plastic
w	Moisture Content (Dry Wgt. Basis)
D	Dry
M	Moist
MTW	Moist To Wet
W	Wet
Sat	Saturated
Bo	Boulder
Gr	Gravel
Sa	Sand
Si	Silt
Cl	Clay
HP	Hardpan
Le	Ledge
NLTD	No Ledge To Depth
CNPF	Can Not Penetrate Further
TLOB	Top of Ledge Or Boulder
NR	No Recovery
Rec.	Recovery
%Rec.	Percent Recovery
RQD	Rock Quality Designation
CBR	California Bearing Ratio
<	Less Than
>	Greater Than
R	Refusal (N > 100)
VTSPG	NAD83 - See Note 7

COLOR

blk	Black	pnk	Pink
bl	Blue	pu	Purple
brn	Brown	rd	Red
dk	Dark	tn	Tan
gry	Gray	wh	White
gn	Green	yel	Yellow
lt	Light	mltc	Multicolored
or	Orange		

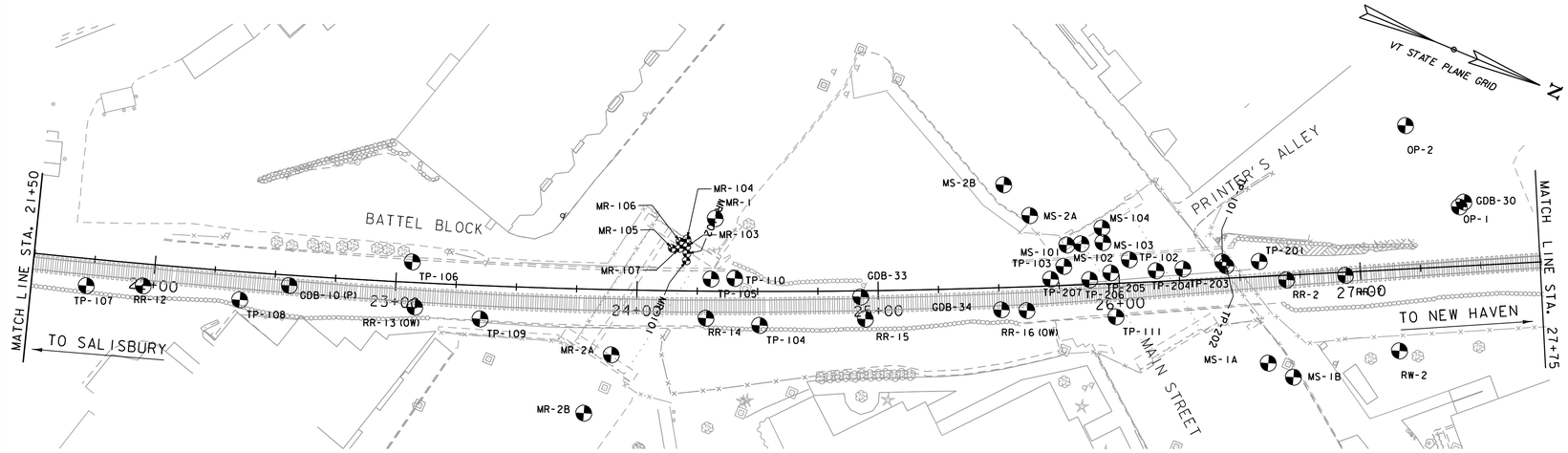

BORING LAYOUT

SCALE 1" = 30'-0"
30 0 30

BORING CHART

HOLE NO.	SURV. STATION	OFFSET	GROUND ELEV.	ELEV. TLOB	NORTHING	EASTING
GBD-10(P)	22+56.25	3.72 RT	350.03'	N/A	552313.66	1464825.64
GDB-30	27+44.52	26.40 LT	361.17'	N/A	552749.86	1464606.74
GDB-33	24+92.96	2.33 RT	350.10'	N/A	552534.16	1464739.04
GDB-34	25+50.98	9.06 RT	350.33'	N/A	552590.06	1464721.54
MR-1	24+32.52	30.43 LT	366.71'	N/A	552466.01	1464732.20
MR-2A	23+90.15	26.60 RT	369.77'	N/A	552447.91	1464800.88
MR-2B	23+79.44	51.01 RT	370.18'	N/A	552446.67	1464827.56
MS-1A	26+60.15	35.98 RT	370.29'	N/A	552700.66	1464699.45
MS-1B	26+70.22	42.33 RT	370.30'	N/A	552712.50	1464700.82
MS-2A	25+64.09	29.57 LT	366.97'	N/A	552585.87	1464680.97
MS-2B	25+53.66	42.66 LT	366.23'	N/A	552571.03	1464673.37
MS-101	25+79.06	16.78 LT	368.68'	N/A	552604.76	1464686.34
MS-102	25+85.03	17.00 LT	368.80'	N/A	552610.06	1464683.64
MS-103	25+94.09	17.20 LT	369.00'	N/A	552618.16	1464679.64
MS-104	25+93.95	23.24 LT	368.57'	N/A	552615.47	1464674.23
RR-2	26+69.45	1.94 RT	350.92'	349.42'	552694.38	1464664.71
RR-7	26+93.95	1.34 RT	351.06'	N/A	552716.22	1464653.60
RR-12	21+95.98	8.50 RT	350.30'	332.10'	552257.78	1464849.03
RR-13(OW)	23+08.54	9.69 RT	350.19'	333.10'	552365.10	1464813.95
RR-14	24+28.94	10.88 RT	350.31'	326.30'	552478.33	1464771.79
RR-15	24+94.73	11.53 RT	350.32'	327.32'	522539.45	1464746.77

BORING CHART

HOLE NO.	SURV. STATION	OFFSET	GROUND ELEV.	ELEV. TLOB	NORTHING	EASTING
RR-16(OW)	25+61.50	9.75 RT	350.37'	338.40'	552599.93	1464717.78
RW-2	27+14.66	33.75 RT	369.60'	349.29'	552748.90	1464673.88
OP-1	27+42.54	24.58 LT	361.25'	N/A	552748.86	1464609.24
OP-2	27+22.04	59.34 LT	360.68'	N/A	552715.36	1464586.74
MR-101	24+20.58	12.85 LT	367.28'	N/A	552461.66	1464752.94
MR-102	24+20.77	15.81 LT	367.96'	N/A	552460.72	1464750.13
MR-103	24+20.70	18.74 LT	367.80'	N/A	552459.56	1464747.44
MR-104	24+20.76	21.84 LT	367.59'	N/A	552458.46	1464744.54
MR-105	24+14.62	17.94 LT	367.91'	N/A	552457.06	1464749.34
MR-106	24+17.86	20.78 LT	367.74'	N/A	552456.18	1464746.60
MR-107	24+17.65	17.91 LT	367.95'	N/A	552454.26	1464750.44
TP-101	26+43.31	6.88 LT	352.50'	N/A	552667.00	1464668.00
TP-102	26+04.74	9.62 LT	350.50'	N/A	552631.00	1464682.00
TP-103	25+77.45	7.98 T	350.40'	N/A	552607.00	1464695.00
TP-104	24+51.09	13.79 RT	350.20'	N/A	552500.00	1464766.00
TP-105	24+30.90	5.37 LT	351.10'	N/A	552474.00	1464756.00
TP-106	23+06.66	9.00 LT	349.60'	N/A	552357.00	1464797.00
TP-107	21+72.60	10.57 RT	350.30'	N/A	552236.00	1464858.00
TP-108	22+36.25	11.08 RT	350.20'	N/A	552297.00	1464839.00
TP-109	23+35.74	13.33 RT	350.10'	N/A	552392.00	1464808.00
TP-110	24+40.76	5.66 LT	351.50'	N/A	552483.00	1464752.00
TP-111	25+98.18	13.81 RT	350.40'	N/A	552635.00	1464706.00
TP-201	26+58.54	6.28 LT	350.00'	N/A	552681.00	1464662.00
TP-202	26+44.69	5.12 LT	350.00'	N/A	552669.00	1464669.00
TP-203	26+26.80	4.76 LT	350.00'	N/A	552653.00	1464677.00
TP-204	26+15.61	4.51 LT	350.00'	N/A	552643.00	1464682.00
TP-205	25+96.81	4.50 LT	350.00'	N/A	552626.00	1464690.00
TP-206	25+87.92	2.02 LT	350.00'	N/A	552619.00	1464696.00
TP-207	25+71.78	2.89 LT	350.00'	N/A	552604.00	1464702.00

DEFINITIONS (AASHTO)

BEDROCK (LEDGE) - Rock in its native location of indefinite thickness.

BOULDER - A rock fragment with an average dimension > 12 inches.

COBBLE - Rock fragments with an average dimension between 3 and 12 inches.

GRAVEL - Rounded particles of rock < 3" and > 0.0787" (#10 sieve).

SAND - Particles of rock < 0.0787" (#10 sieve) and > 0.0029" (#200 sieve).

SILT - Soil < 0.0029" (#200 sieve), non or slightly plastic and exhibits no strength when air-dried.

CLAY - Fine grained soil, exhibits plasticity when moist and considerable strength when air-dried.

VARVED - Alternate layers of silt and clay.

HARDPAN - Extremely dense soil, cemented layer, not softened when wet.

MUCK - Soft organic soil (containing > 10% organic material.

MOISTURE CONTENT - Weight of water divided by dry weight of soil.

FLOWING SAND - Granular soil so saturated (loose) that it flows into drill casing during extraction of wash rod.

STRIKE - Angle from magnetic north to line of intersection of bed with a horizontal plane.

DIP - Inclination of bed with a horizontal plane.

GENERAL NOTES

1. The subsurface explorations shown herein were made between March 2013 and December 2015 by GeoDesign, Inc.
2. Soil and rock classifications, properties and descriptions are based on engineering interpretation from available subsurface information by GeoDesign, Inc. and may not necessarily reflect actual variations in subsurface conditions that may be encountered between individual boring or sample locations.
3. Observed water levels and/or conditions indicated are as recorded at the time of exploration and may vary according to the prevailing rainfall, methods of exploration and other factors.
4. Engineering judgment was exercised in preparing the subsurface information presented herein. Analysis and interpretation of subsurface data was performed and interpreted for Agency design and estimating purposes. Presentation of the information in the Contract is intended to provide the Contractor access to the same data available to the Agency. The subsurface information is presented in good faith and is not intended as a substitute for personal investigation, independent interpretation, independent analysis or judgment by the Contractor.
5. Pictorial structure details shown on the boring plan layout or soils profile are for illustrative purposes only and may not accurately portray final contract details.
6. Terminology used on boring logs to describe the hardness, degree of weathering, and spacing of fractures, joints and other discontinuities in the bedrock is defined in the AASHTO Manual on Subsurface Investigations, 1988.
7. Northing and Easting coordinates are shown in Vermont State Plane Grid North American Datum 1983 in survey feet.
8. Boring logs are available in the geotechnical data report.

vhb

PROJECT NAME: MIDDLEBURY
PROJECT NUMBER: WCRS(23)

FILE NAME: zi3g542bor.dgn
PROJECT LEADER: A.P. GUYETTE
DESIGNED BY: GEODESIGN
BORING INFORMATION SHEET (3 OF 6)

PLOT DATE: 4/30/2019
DRAWN BY: C.J. HAKEY
CHECKED BY: GEODESIGN
SHEET 153 OF 328

SOIL CLASSIFICATION

AASHTO

A1	Gravel and Sand
A3	Fine Sand
A2	Silty or Clayey Gravel and Sand
A4	Silty Soil - Low Compressibility
A5	Silty Soil - Highly Compressible
A6	Clayey Soil - Low Compressibility
A7	Clayey Soil - Highly Compressible

ROCK QUALITY DESIGNATION

R.Q.D. (%)	ROCK DESCRIPTION
<25	Very Poor
25 to 50	Poor
51 to 75	Fair
76 to 90	Good
>90	Excellent

SHEAR STRENGTH

UNDRAINED SHEAR STRENGTH IN P.S.F.	CONSISTENCY
<250	Very Soft
250-500	Soft
500-1000	Med. Stiff
1000-2000	Stiff
2000-4000	Very Stiff
>4000	Hard

CORRELATION GUIDE OF "N" TO DENSITY/CONSISTENCY

DENSITY (GRANULAR SOILS)

N	DESCRIPTIVE TERM
<5	Very Loose
5-10	Loose
11-24	Med. Dense
25-50	Dense
>50	Very Dense

CONSISTENCY (COHESIVE SOILS)

N	DESCRIPTIVE TERM
<2	Very Soft
2-4	Soft
5-8	Med. Stiff
9-15	Stiff
16-30	Very Stiff
31-60	Hard
>60	Very Hard

COMMONLY USED SYMBOLS

▼	Water Elevation
⊗	Standard Penetration Boring
⊕	Auger Boring
⊙	Rod Sounding
S	Sample
N	Standard Penetration Test Blow Count Per Foot For: 2" O.D. Sampler 1 3/8" I.D. Sampler Hammer Weight Of 140 Lbs. Hammer Fall Of 30"
VS	Field Vane Shear Test
US	Undisturbed Soil Sample
B	Blast
DC	Diamond Core
MD	Mud Drill
WA	Wash Ahead
HSA	Hollow Stem Auger
AX	Core Size 1 1/8"
BX	Core Size 1 5/8"
NX	Core Size 2 1/8"
M	Double Tube Core Barrel Used
LL	Liquid Limit
PL	Plastic Limit
PI	Plasticity Index
NP	Non Plastic
w	Moisture Content (Dry Wgt. Basis)
D	Dry
M	Moist
MTW	Moist To Wet
W	Wet
Sat	Saturated
Bo	Boulder
Gr	Gravel
Sa	Sand
Si	Silt
Cl	Clay
HP	Hardpan
Le	Ledge
NLTD	No Ledge To Depth
CNPF	Can Not Penetrate Further
TLOB	Top of Ledge Or Boulder
NR	No Recovery
Rec.	Recovery
%Rec.	Percent Recovery
RQD	Rock Quality Designation
CBR	California Bearing Ratio
<	Less Than
>	Greater Than
R	Refusal (N > 100)
VTSPG	NAD83 - See Note 7

COLOR

blk	Black	pnk	Pink
bl	Blue	pu	Purple
brn	Brown	rd	Red
dk	Dark	tn	Tan
gry	Gray	wh	White
gn	Green	yel	Yellow
lt	Light	mltc	Multicolored
or	Orange		

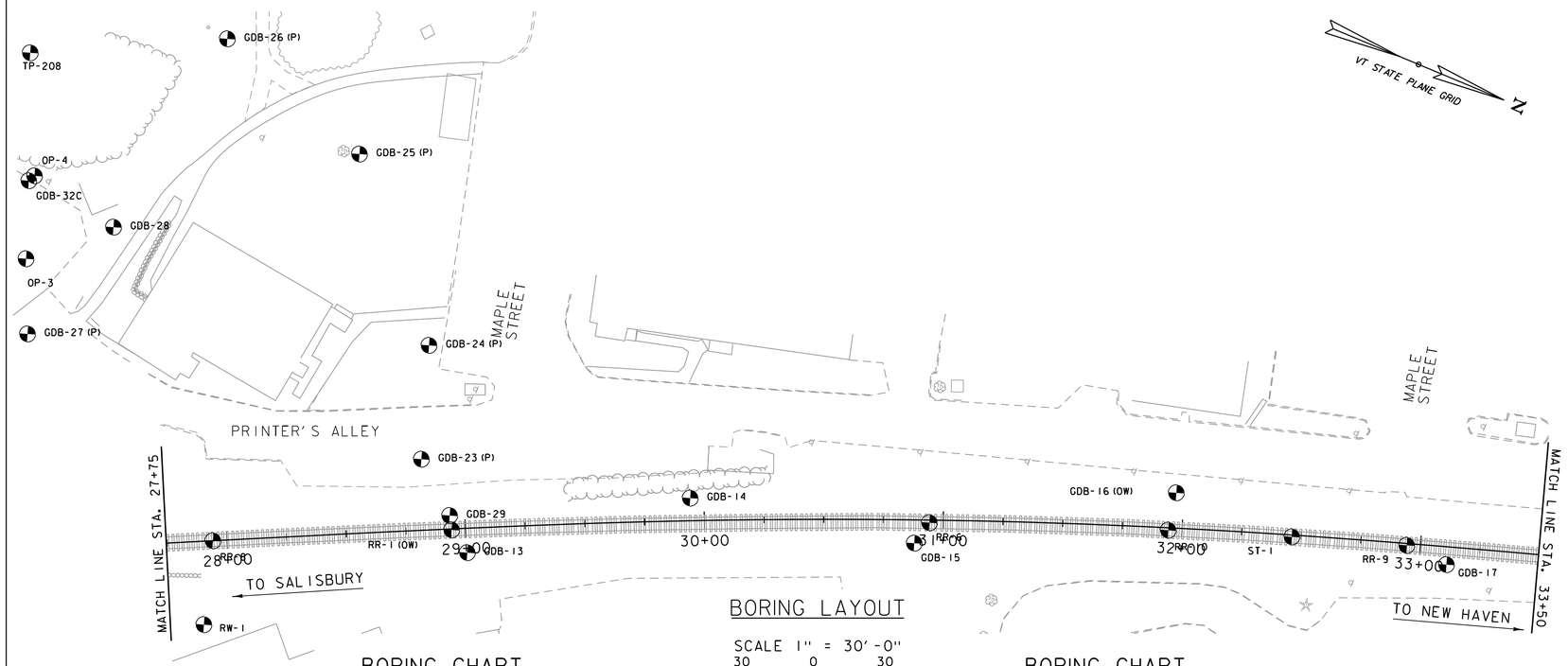

BORING LAYOUT

SCALE 1" = 30'-0"
30 0 30

BORING CHART

HOLE NO.	SURV. STATION	OFFSET	GROUND ELEV.	ELEV. TLOB	NORTHING	EASTING
GDB-13	29+00.48	10.22 RT	352.23'	338.70'	552906.36	1464572.64
GDB-14	29+94.46	9.48 LT	354.29'	N/A	552983.66	1464515.64
GDB-15	30+88.16	9.75 RT	355.63'	N/A	553077.46	1464496.94
GDB-16(OW)	31+97.04	14.78 LT	355.88'	N/A	553170.56	1464435.24
GDB-23(P)	28+83.07	29.73 LT	353.77'	N/A	552873.56	1464543.94
GDB-17	33+11.71	7.47 RT	357.02'	N/A	553286.46	1464419.44
GDB-24(P)	28+88.43	77.18 LT	353.78'	N/A	552858.16	1464498.74
GDB-25(P)	28+63.49	158.55 LT	352.22'	N/A	552800.46	1464436.04
GDB-26(P)	28+11.12	209.49 LT	350.34'	N/A	552730.86	1464412.84
GDB-27(P)	27+21.29	90.41 LT	360.20'	N/A	552701.26	1464559.04
GDB-28	27+59.51	133.20 LT	357.57'	352.40'	552717.26	1464503.94
GDB-29	28+93.79	5.64 LT	352.97'	N/A	552893.56	1464561.14

BORING CHART

HOLE NO.	SURV. STATION	OFFSET	GROUND ELEV.	ELEV. TLOB	NORTHING	EASTING
GDB-32C	27+25.11	154.44 LT	358.06'	N/A	552677.06	1464499.64
OP-3	27+22.27	121.87 LT	359.02'	N/A	552688.56	1464530.24
OP-4	27+27.58	156.36 LT	357.92'	N/A	552678.46	1464496.84
RR-1(OW)	28+94.34	0.41 RT	353.05'	N/A	552896.63	1464566.37
RR-6	30+94.39	1.11 RT	355.04'	N/A	553080.01	1464486.61
RR-8	27+94.34	0.03 RT	352.04'	N/A	552806.20	1464609.06
RR-9	32+94.44	0.78 RT	356.74'	N/A	553267.98	1464418.41
RR-10	31+94.43	1.04 RT	355.92'	N/A	553173.45	1464451.01
RW-1	27+88.77	34.89 RT	362.81'	350.28'	552816.23	1464642.91
ST-1	32+46.24	0.77 RT	356.37'	N/A	553222.26	1464433.64
TP-208	27+28.45	207.87 LT	325.70'	N/A	552657.00	1464450.00

DEFINITIONS (AASHTO)

BEDROCK (LEDGE) - Rock in its native location of indefinite thickness.

BOULDER - A rock fragment with an average dimension > 12 inches.

COBBLE - Rock fragments with an average dimension between 3 and 12 inches.

GRAVEL - Rounded particles of rock < 3" and > 0.0787" (#10 sieve).

SAND - Particles of rock < 0.0787" (#10 sieve) and > 0.0029" (#200 sieve).

SILT - Soil < 0.0029" (#200 sieve), non or slightly plastic and exhibits no strength when air-dried.

CLAY - Fine grained soil, exhibits plasticity when moist and considerable strength when air-dried.

VARVED - Alternate layers of silt and clay.

HARDPAN - Extremely dense soil, cemented layer, not softened when wet.

MUCK - Soft organic soil (containing > 10% organic material.

MOISTURE CONTENT - Weight of water divided by dry weight of soil.

FLOWING SAND - Granular soil so saturated (loose) that it flows into drill casing during extraction of wash rod.

STRIKE - Angle from magnetic north to line of intersection of bed with a horizontal plane.

DIP - Inclination of bed with a horizontal plane.

GENERAL NOTES

1. The subsurface explorations shown herein were made between March 2013 and December 2015 by GeoDesign, Inc.
2. Soil and rock classifications, properties and descriptions are based on engineering interpretation from available subsurface information by GeoDesign, Inc. and may not necessarily reflect actual variations in subsurface conditions that may be encountered between individual boring or sample locations.
3. Observed water levels and/or conditions indicated are as recorded at the time of exploration and may vary according to the prevailing rainfall, methods of exploration and other factors.
4. Engineering judgment was exercised in preparing the subsurface information presented herein. Analysis and interpretation of subsurface data was performed and interpreted for Agency design and estimating purposes. Presentation of the information in the Contract is intended to provide the Contractor access to the same data available to the Agency. The subsurface information is presented in good faith and is not intended as a substitute for personal investigation, independent interpretation, independent analysis or judgment by the Contractor.
5. Pictorial structure details shown on the boring plan layout or soils profile are for illustrative purposes only and may not accurately portray final contract details.
6. Terminology used on boring logs to describe the hardness, degree of weathering, and spacing of fractures, joints and other discontinuities in the bedrock is defined in the AASHTO Manual on Subsurface Investigations, 1988.
7. Northing and Easting coordinates are shown in Vermont State Plane Grid North American Datum 1983 in survey feet.
7. Boring logs are available in the geotechnical data report.

vhb

PROJECT NAME: MIDDLEBURY
PROJECT NUMBER: WCRS(23)

FILE NAME: zl3g542bor.dgn
PROJECT LEADER: A.P. GUYETTE
DESIGNED BY: GEODESIGN
BORING INFORMATION SHEET (4 OF 6)

PLOT DATE: 4/30/2019
DRAWN BY: C.J. HAKEY
CHECKED BY: GEODESIGN
SHEET 154 OF 328

SOIL CLASSIFICATION

AASHTO

A1	Gravel and Sand
A3	Fine Sand
A2	Silty or Clayey Gravel and Sand
A4	Silty Soil - Low Compressibility
A5	Silty Soil - Highly Compressible
A6	Clayey Soil - Low Compressibility
A7	Clayey Soil - Highly Compressible

ROCK QUALITY DESIGNATION

R.Q.D. (%)	ROCK DESCRIPTION
<25	Very Poor
25 to 50	Poor
51 to 75	Fair
76 to 90	Good
>90	Excellent

SHEAR STRENGTH

UNDRAINED SHEAR STRENGTH IN P.S.F.	CONSISTENCY
<250	Very Soft
250-500	Soft
500-1000	Med. Stiff
1000-2000	Stiff
2000-4000	Very Stiff
>4000	Hard

CORRELATION GUIDE OF "N" TO DENSITY/CONSISTENCY

DENSITY (GRANULAR SOILS)

N	DESCRIPTIVE TERM
<5	Very Loose
5-10	Loose
11-24	Med. Dense
25-50	Dense
>50	Very Dense

CONSISTENCY (COHESIVE SOILS)

N	DESCRIPTIVE TERM
<2	Very Soft
2-4	Soft
5-8	Med. Stiff
9-15	Stiff
16-30	Very Stiff
31-60	Hard
>60	Very Hard

COMMONLY USED SYMBOLS

▼	Water Elevation
⊗	Standard Penetration Boring
⊕	Auger Boring
⊙	Rod Sounding
S	Sample
N	Standard Penetration Test Blow Count Per Foot For: 2" O.D. Sampler 1 3/8" I.D. Sampler Hammer Weight Of 140 Lbs. Hammer Fall Of 30"
VS	Field Vane Shear Test
US	Undisturbed Soil Sample
B	Blast
DC	Diamond Core
MD	Mud Drill
WA	Wash Ahead
HSA	Hollow Stem Auger
AX	Core Size 1 1/8"
BX	Core Size 1 5/8"
NX	Core Size 2 1/8"
M	Double Tube Core Barrel Used
LL	Liquid Limit
PL	Plastic Limit
PI	Plasticity Index
NP	Non Plastic
w	Moisture Content (Dry Wgt. Basis)
D	Dry
M	Moist
MTW	Moist To Wet
W	Wet
Sat	Saturated
Bo	Boulder
Gr	Gravel
Sa	Sand
Si	Silt
Cl	Clay
HP	Hardpan
Le	Ledge
NLTD	No Ledge To Depth
CNPF	Can Not Penetrate Further
TLOB	Top of Ledge Or Boulder
NR	No Recovery
Rec.	Recovery
%Rec.	Percent Recovery
RQD	Rock Quality Designation
CBR	California Bearing Ratio
<	Less Than
>	Greater Than
R	Refusal (N > 100)
VTSPG	NAD83 - See Note 7

COLOR

blk	Black	pnk	Pink
bl	Blue	pu	Purple
brn	Brown	rd	Red
dk	Dark	tn	Tan
gry	Gray	wh	White
gn	Green	yel	Yellow
lt	Light	mltc	Multicolored
or	Orange		

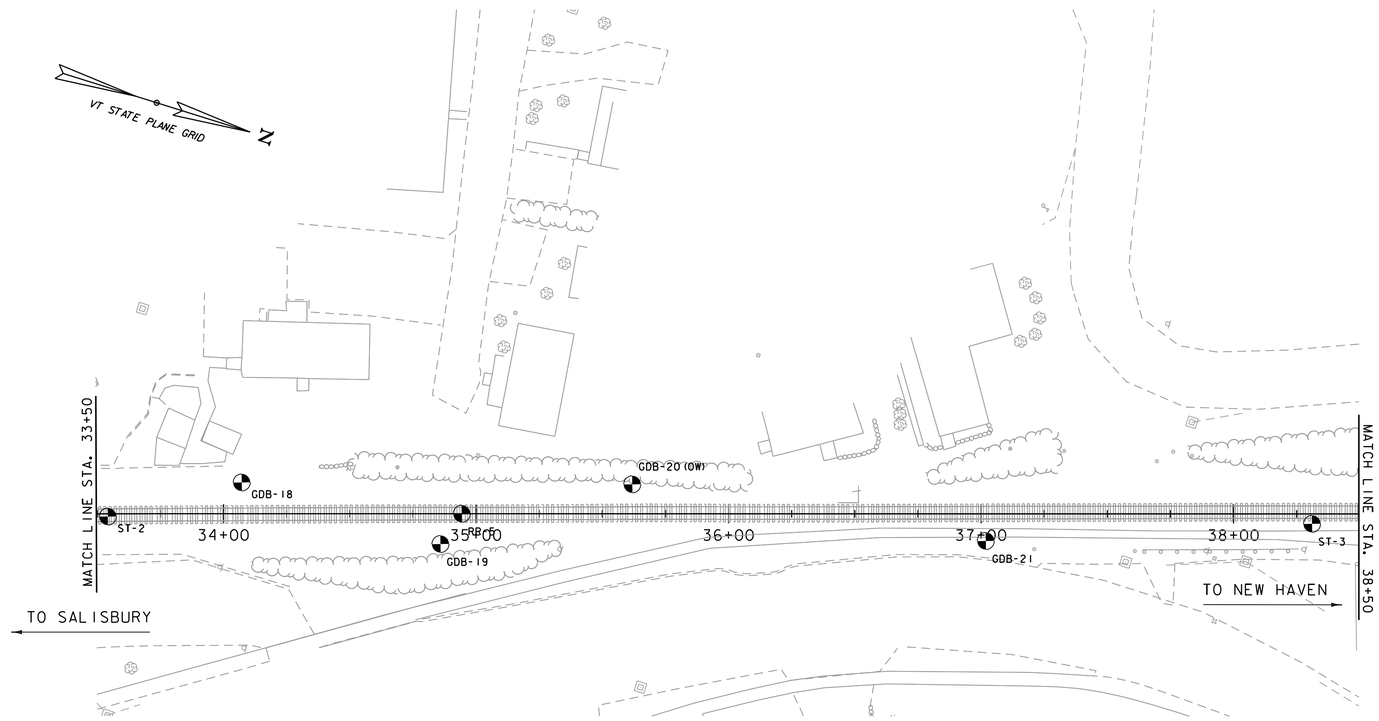

BORING LAYOUT

SCALE 1" = 30'-0"
30 0 30

BORING CHART

HOLE NO.	SURV. STATION	OFFSET	GROUND ELEV.	ELEV. TLOB	NORTHING	EASTING
GDB-20(OW)	35+62.04	11.67 LT	359.55'	N/A	553519.46	1464326.04
GDB-18	34+07.37	12.38 LT	357.31'	N/A	553371.66	1464371.64
GDB-19	34+86.09	11.99 RT	358.72'	N/A	553454.06	1464371.34
GDB-21	37+02.05	10.74 RT	360.36'	N/A	553659.76	1464305.54
RR-5	34+94.52	0.03 LT	358.24'	N/A	553458.51	1464357.36

DEFINITIONS (AASHTO)

BEDROCK (LEDGE) - Rock in its native location of indefinite thickness.

BOULDER - A rock fragment with an average dimension > 12 inches.

COBBLE - Rock fragments with an average dimension between 3 and 12 inches.

GRAVEL - Rounded particles of rock < 3" and > 0.0787" (#10 sieve).

SAND - Particles of rock < 0.0787" (#10 sieve) and > 0.0029" (#200 sieve).

SILT - Soil < 0.0029" (#200 sieve), non or slightly plastic and exhibits no strength when air-dried.

CLAY - Fine grained soil, exhibits plasticity when moist and considerable strength when air-dried.

VARVED - Alternate layers of silt and clay.

HARDPAN - Extremely dense soil, cemented layer, not softened when wet.

MUCK - Soft organic soil (containing > 10% organic material.

MOISTURE CONTENT - Weight of water divided by dry weight of soil.

FLOWING SAND - Granular soil so saturated (loose) that it flows into drill casing during extraction of wash rod.

STRIKE - Angle from magnetic north to line of intersection of bed with a horizontal plane.

DIP - Inclination of bed with a horizontal plane.

GENERAL NOTES

1. The subsurface explorations shown herein were made between March 2013 and December 2015 by GeoDesign, Inc.
2. Soil and rock classifications, properties and descriptions are based on engineering interpretation from available subsurface information by GeoDesign, Inc. and may not necessarily reflect actual variations in subsurface conditions that may be encountered between individual boring or sample locations.
3. Observed water levels and/or conditions indicated are as recorded at the time of exploration and may vary according to the prevailing rainfall, methods of exploration and other factors.
4. Engineering judgment was exercised in preparing the subsurface information presented herein. Analysis and interpretation of subsurface data was performed and interpreted for Agency design and estimating purposes. Presentation of the information in the Contract is intended to provide the Contractor access to the same data available to the Agency. The subsurface information is presented in good faith and is not intended as a substitute for personal investigation, independent interpretation, independent analysis or judgment by the Contractor.
5. Pictorial structure details shown on the boring plan layout or soils profile are for illustrative purposes only and may not accurately portray final contract details.
6. Terminology used on boring logs to describe the hardness, degree of weathering, and spacing of fractures, joints and other discontinuities in the bedrock is defined in the AASHTO Manual on Subsurface Investigations, 1988.
7. Northing and Easting coordinates are shown in Vermont State Plane Grid North American Datum 1983 in survey feet.
8. Boring logs are available in the geotechnical data report.

PROJECT NAME: MIDDLEBURY
PROJECT NUMBER: WCRS(23)

FILE NAME: z13g542bor.dgn
PROJECT LEADER: A.P. GUYETTE
DESIGNED BY: GEODESIGN
BORING INFORMATION SHEET (5 OF 6)

PLOT DATE: 4/30/2019
DRAWN BY: C.J. HAKEY
CHECKED BY: GEODESIGN
SHEET 155 OF 328

SOIL CLASSIFICATION

AASHTO

A1	Gravel and Sand
A3	Fine Sand
A2	Silty or Clayey Gravel and Sand
A4	Silty Soil - Low Compressibility
A5	Silty Soil - Highly Compressible
A6	Clayey Soil - Low Compressibility
A7	Clayey Soil - Highly Compressible

ROCK QUALITY DESIGNATION

R.Q.D. (%)	ROCK DESCRIPTION
<25	Very Poor
25 to 50	Poor
51 to 75	Fair
76 to 90	Good
>90	Excellent

SHEAR STRENGTH

UNDRAINED SHEAR STRENGTH IN P.S.F.	CONSISTENCY
<250	Very Soft
250-500	Soft
500-1000	Med. Stiff
1000-2000	Stiff
2000-4000	Very Stiff
>4000	Hard

CORRELATION GUIDE OF "N" TO DENSITY/CONSISTENCY

DENSITY (GRANULAR SOILS)

N	DESCRIPTIVE TERM
<5	Very Loose
5-10	Loose
11-24	Med. Dense
25-50	Dense
>50	Very Dense

CONSISTENCY (COHESIVE SOILS)

N	DESCRIPTIVE TERM
<2	Very Soft
2-4	Soft
5-8	Med. Stiff
9-15	Stiff
16-30	Very Stiff
31-60	Hard
>60	Very Hard

COMMONLY USED SYMBOLS

▼	Water Elevation
⊗	Standard Penetration Boring
⊕	Auger Boring
⊙	Rod Sounding
S	Sample
N	Standard Penetration Test Blow Count Per Foot For: 2" O.D. Sampler 1 3/8" I.D. Sampler Hammer Weight Of 140 Lbs. Hammer Fall Of 30"
VS	Field Vane Shear Test
US	Undisturbed Soil Sample
B	Blast
DC	Diamond Core
MD	Mud Drill
WA	Wash Ahead
HSA	Hollow Stem Auger
AX	Core Size 1 1/8"
BX	Core Size 1 5/8"
NX	Core Size 2 1/8"
M	Double Tube Core Barrel Used
LL	Liquid Limit
PL	Plastic Limit
PI	Plasticity Index
NP	Non Plastic
w	Moisture Content (Dry Wgt. Basis)
D	Dry
M	Moist
MTW	Moist To Wet
W	Wet
Sat	Saturated
Bo	Boulder
Gr	Gravel
Sa	Sand
Si	Silt
Cl	Clay
HP	Hardpan
Le	Ledge
NLTD	No Ledge To Depth
CNPF	Can Not Penetrate Further
TLOB	Top of Ledge Or Boulder
NR	No Recovery
Rec.	Recovery
%Rec.	Percent Recovery
RQD	Rock Quality Designation
CBR	California Bearing Ratio
<	Less Than
>	Greater Than
R	Refusal (N > 100)
VTSPG	NAD83 - See Note 7

COLOR

blk	Black	pnk	Pink
bl	Blue	pu	Purple
brn	Brown	rd	Red
dk	Dark	tn	Tan
gry	Gray	wh	White
gn	Green	yel	Yellow
lt	Light	mltc	Multicolored
or	Orange		

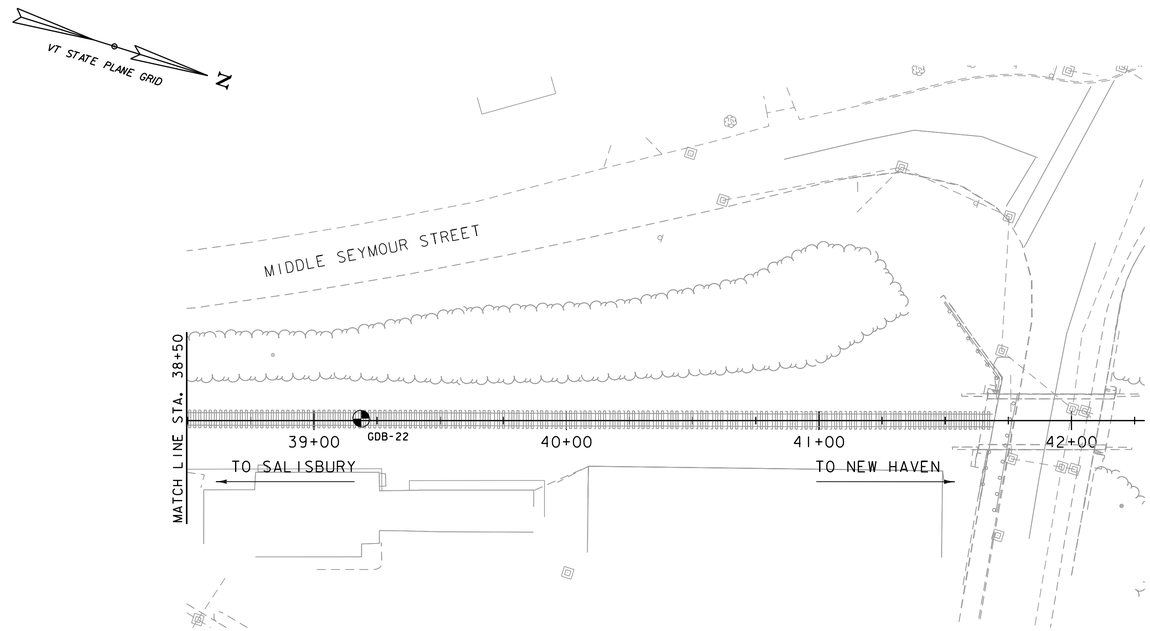

BORING LAYOUT

SCALE 1" = 30'-0"
30 0 30

BORING CHART

HOLE NO.	SURV. STATION	OFFSET	GROUND ELEV.	ELEV. TLOB	NORTHING	EASTING
GDB-22	39+18.93	0.78 LT	359.70	N/A	553863.26	1464229.67

DEFINITIONS (AASHTO)

BEDROCK (LEDGE) - Rock in its native location of indefinite thickness.

BOULDER - A rock fragment with an average dimension > 12 inches.

COBBLE - Rock fragments with an average dimension between 3 and 12 inches.

GRAVEL - Rounded particles of rock < 3" and > 0.0787" (#10 sieve).

SAND - Particles of rock < 0.0787" (#10 sieve) and > 0.0029" (#200 sieve).

SILT - Soil < 0.0029" (#200 sieve), non or slightly plastic and exhibits no strength when air-dried.

CLAY - Fine grained soil, exhibits plasticity when moist and considerable strength when air-dried.

VARVED - Alternate layers of silt and clay.

HARDPAN - Extremely dense soil, cemented layer, not softened when wet.

MUCK - Soft organic soil (containing > 10% organic material.

MOISTURE CONTENT - Weight of water divided by dry weight of soil.

FLOWING SAND - Granular soil so saturated (loose) that it flows into drill casing during extraction of wash rod.

STRIKE - Angle from magnetic north to line of intersection of bed with a horizontal plane.

DIP - Inclination of bed with a horizontal plane.

GENERAL NOTES

1. The subsurface explorations shown herein were made between March 2013 and December 2015 by GeoDesign, Inc.
2. Soil and rock classifications, properties and descriptions are based on engineering interpretation from available subsurface information by GeoDesign, Inc. and may not necessarily reflect actual variations in subsurface conditions that may be encountered between individual boring or sample locations.
3. Observed water levels and/or conditions indicated are as recorded at the time of exploration and may vary according to the prevailing rainfall, methods of exploration and other factors.
4. Engineering judgment was exercised in preparing the subsurface information presented herein. Analysis and interpretation of subsurface data was performed and interpreted for Agency design and estimating purposes. Presentation of the information in the Contract is intended to provide the Contractor access to the same data available to the Agency. The subsurface information is presented in good faith and is not intended as a substitute for personal investigation, independent interpretation, independent analysis or judgment by the Contractor.
5. Pictorial structure details shown on the boring plan layout or soils profile are for illustrative purposes only and may not accurately portray final contract details.
6. Terminology used on boring logs to describe the hardness, degree of weathering, and spacing of fractures, joints and other discontinuities in the bedrock is defined in the AASHTO Manual on Subsurface Investigations, 1988.
7. Northing and Easting coordinates are shown in Vermont State Plane Grid North American Datum 1983 in survey feet.
8. Boring logs are available in the geotechnical data report.

vhb

PROJECT NAME: MIDDLEBURY
PROJECT NUMBER: WCRS(23)

FILE NAME: zl3g542bor.dgn
PROJECT LEADER: A.P. GUYETTE
DESIGNED BY: GEODESIGN
BORING INFORMATION SHEET (6 OF 6)

PLOT DATE: 4/30/2019
DRAWN BY: C.J. HAKEY
CHECKED BY: GEODESIGN
SHEET 156 OF 328

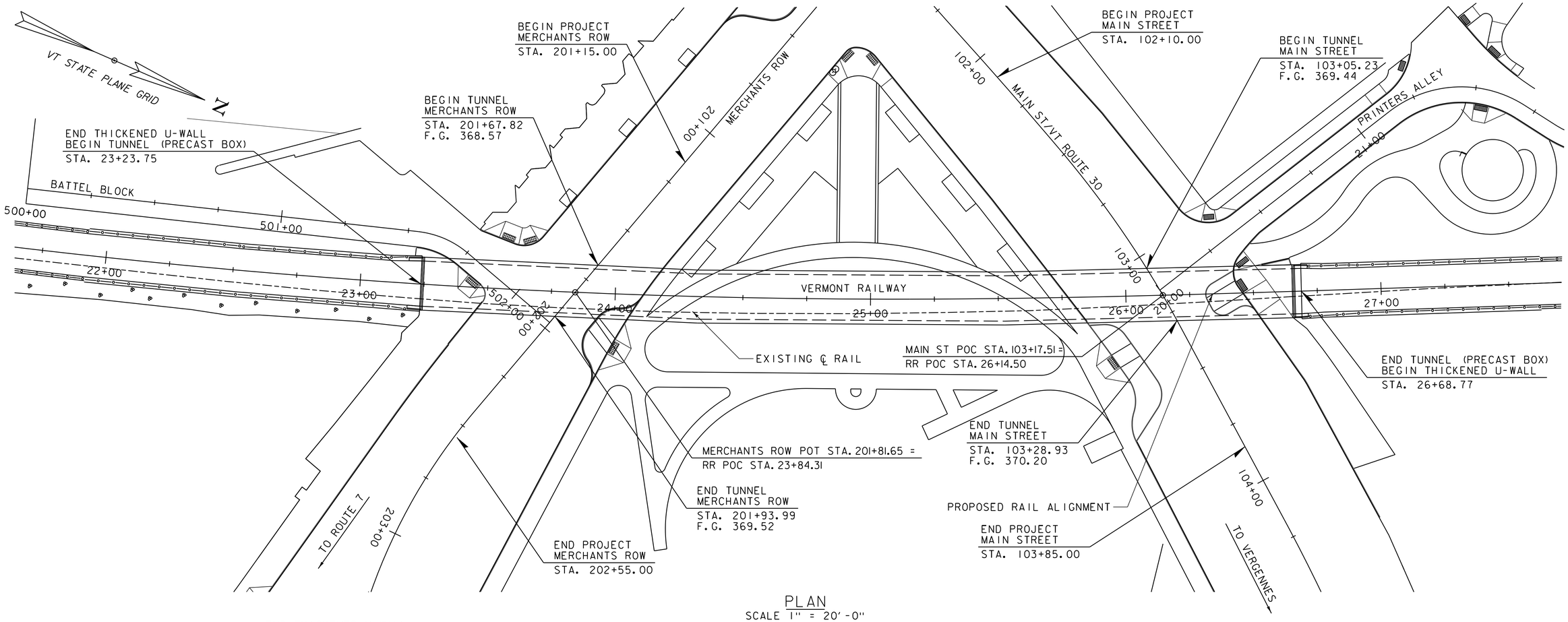

PLAN
SCALE 1" = 20'-0"

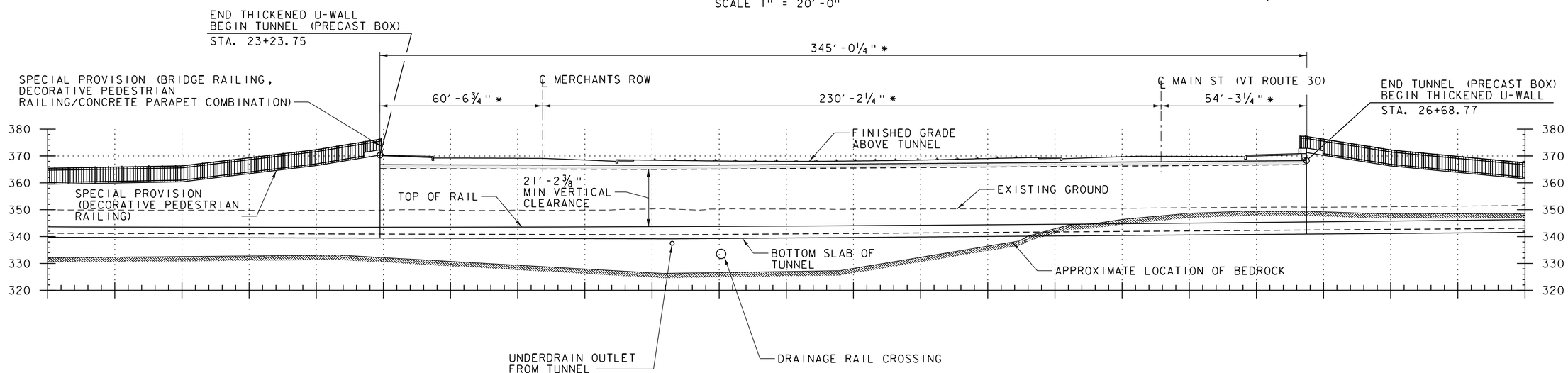

* - DIMENSIONED RADIALLY ALONG ALIGNMENT
NOTE: RETAINING WALL HEIGHTS SHOWN FOR THE WEST WALLS. EAST WALLS NOT SHOWN FOR CLARITY.

LONGITUDINAL SECTION
SCALE 1" = 20'-0"

PROJECT NAME: MIDDLEBURY	
PROJECT NUMBER: WCRS(23)	
FILE NAME: zl3g542pe.dgn	PLOT DATE: 4/30/2019
PROJECT LEADER: A.P. GUYETTE	DRAWN BY: K.C. BARRY
DESIGNED BY: VHB	CHECKED BY: R.H. BARNES
PLAN AND LONGITUDINAL SECTION	SHEET 157 OF 328

STRUCTURE NOTES

GENERAL

1. THE TUNNEL IS DESIGNED FOR HL-93 LIVE LOAD OVER THE TOP SLAB AND COOPER E-80 LIVE LOAD OVER TOP OF THE BOTTOM SLAB. THE U-WALLS ARE DESIGNED FOR COOPER E-80 LIVE LOAD.

2. THE CONTRACTOR SHALL BE RESPONSIBLE FOR COORDINATING CONSISTENCY BETWEEN THE FABRICATOR'S SHOP DRAWINGS OF RELATED COMPONENTS AND ENSURING THE FIT-UP OF ALL COMPONENTS. FABRICATION DRAWINGS SHALL SHOW RELATED COMPONENTS AND INDICATE AS SUCH.

3. THE PRECAST CONCRETE TUNNEL AND U-WALLS SHALL BE BACKFILLED WITH FLOWABLE FILL WHERE THREE FEET OR LESS IS PROVIDED BETWEEN THE LIMITS OF EXCAVATION AS SPECIFIED IN THE TYPICAL SECTIONS AND THE OUTSIDE FACE OF THE PRECAST CONCRETE STRUCTURE. IN AREAS WHERE MORE THAN THREE FEET IS PROVIDED BETWEEN THE LIMITS OF EXCAVATION AS SPECIFIED IN THE TYPICAL SECTIONS AND THE OUTSIDE FACE OF THE PRECAST CONCRETE STRUCTURE, GRANULAR BACKFILL FOR STRUCTURES SHALL BE PLACED IN THE THREE FEET ADJACENT TO THE PRECAST CONCRETE STRUCTURE AND THE AREA BETWEEN THE GRANULAR BACKFILL FOR STRUCTURES AND THE LIMITS OF EXCAVATION AS SPECIFIED IN THE TYPICAL SECTIONS SHALL BE BACKFILLED WITH SUITABLE EXCAVATED MATERIAL MEETING THE REQUIREMENTS OF EARTH BORROW.

4. CONTROLLED DENSITY (FLOWABLE) FILL SHALL BE PLACED AS BACKFILL FOR THE STRUCTURES AS SHOWN IN THE PLANS. CONTROLLED DENSITY (FLOWABLE) FILL SHALL BE LIMITED TO 5-FEET BELOW THE TOP OF THE U-WALLS IN ITS FLUID STATE, UNLESS WRITTEN APPROVAL IS PROVIDED BY THE ENGINEER FOR A GREATER LIMIT. THE FINAL LIFT OF CONTROLLED DENSITY FLOWABLE FILL TO THE TOP OF U-WALLS MAY BE PLACED IN ITS FLUID STATE FOR A MAXIMUM OF A 5-FOOT DEPTH.

5. THE TUNNEL AND U-WALLS SHALL NOT BE BACKFILLED UNTIL CONNECTION BOLTS AND POST-TENSIONING HAVE BEEN INSTALLED, GROUTED CONNECTIONS OR CAST-IN-PLACE CONCRETE HAS ACHIEVED THE SPECIFIED STRENGTH, MEMBRANE WATERPROOFING HAS BEEN INSTALLED (WHERE APPLICABLE) AND BALLAST HAS BEEN PLACED IN THE TUNNEL OR U-WALLS.

6. THE EXISTING TEMPORARY VEHICULAR BRIDGES ON MAIN STREET AND MERCHANTS ROW, AND THE TEMPORARY PEDESTRIAN BRIDGE ALONG MAIN STREET SHALL BE REMOVED. THE VEHICULAR BRIDGE SUPERSTRUCTURES SHALL BE DISMANTLED AND DELIVERED TO THE LOCATION SPECIFIED IN THE SPECIAL PROVISIONS. THE VEHICULAR BRIDGE SUBSTRUCTURES AND PEDESTRIAN BRIDGE (SUPERSTRUCTURE AND SUBSTRUCTURES) SHALL BE REMOVED AND DISPOSED OF BY THE CONTRACTOR. REMOVAL OF PAVEMENT ON THE TEMPORARY BRIDGES WILL NOT BE PAID FOR DIRECTLY AND WILL BE CONSIDERED INCIDENTAL TO THE BRIDGE REMOVAL ITEMS BELOW. PAYMENT FOR REMOVAL AND DISPOSAL, OR DELIVERY, OF THE TEMPORARY BRIDGES WILL BE MADE UNDER THE FOLLOWING ITEMS:

   A. ITEM 529.20, "PARTIAL REMOVAL OF STRUCTURE (MAIN ST. TEMP. BRIDGE)"
   B. ITEM 529.20, "PARTIAL REMOVAL OF STRUCTURE (MERCHANTS ROW TEMP. BRIDGE)"
   C. ITEM 529.20, "PARTIAL REMOVAL OF STRUCTURE (MAIN ST. TEMP. PED. BRIDGE)"

   THIS WORK WILL INCLUDE THE COMPLETE REMOVAL OF THE EXISTING BRIDGE SUPERSTRUCTURE, INCLUDING ALL BEARINGS, ANCHOR BOLTS, AND THE BRIDGE SUBSTRUCTURE THAT FALLS OUTSIDE THE LIMITS COVERED BY THE CONTRACT EXCAVATION ITEMS.

PRECAST CONCRETE TUNNEL AND U-WALLS

7. ALL PRECAST CONCRETE SHALL HAVE A COMPRESSIVE STRENGTH f'c = 5,000 PSI.

8. ITEM 514.10, "WATER REPELLENT, SILANE" SHALL BE APPLIED TO ALL EXPOSED CONCRETE ON THE TUNNEL AND U-WALLS, EXCEPT FOR THE UNDERSIDE OF THE TOP OF THE TUNNEL. WATER REPELLENT, SILANE MAY BE SHOP APPLIED FOR THE PRECAST COMPONENTS, IN ACCORDANCE WITH THE MANUFACTURER'S RECOMMENDATIONS.

9. ALL LIFTING POINTS IN THE PRECAST CONCRETE STRUCTURES SHALL BE REMOVABLE TO THE MINIMUM CLEAR COVER FOR REINFORCING STEEL AS SPECIFIED IN THE PLANS. THE LIFTING POINTS SHALL BE DETAILED IN THE APPROPRIATE FABRICATION DRAWINGS. PAYMENT FOR THIS WORK WILL BE CONSIDERED INCIDENTAL TO THE APPROPRIATE PRECAST ITEM.

10. THE METHOD OF FORMING FOR SUBSEQUENT GROUT OR CONCRETE PLACEMENTS AFTER PLACING PRECAST UNITS SHALL BE DETERMINED BY THE CONTRACTOR. THE CONTRACTOR IS ENCOURAGED TO WORK WITH THE FABRIACTOR IF ADDITIONAL SUPPORTS MAY BE REQUIRED. IF THE CONTRACTOR REQUIRES DRILLING OR SIMILAR MEANS INTO THE PRECAST UNITS FOR ATTACHMENT OF ADDITIONAL FORM SUPPORTS, THE INTENDED LOCATIONS SHALL BE NOTED ON THE FABRICATION DRAWINGS, AND APPROVED BY THE ENGINEER.

11. ALL EXPOSED EDGES OF CONCRETE SHALL BE CHAMFERED ¾" UNLESS NOTED OTHERWISE.

12. PAYMENT FOR THE PRECAST TUNNEL AND U-WALLS WILL BE MADE UNDER THE APPROPRIATE PRECAST CONCRETE STRUCTURE ITEM. PAYMENT FOR POST-TENSIONING BARS, DUCTS, HARDWARE AND GROUTING; EXPANSION MATERIAL, PREFORMED JOINT FILLER, JOINT GASKETS, MECHANICAL BAR CONNECTORS, MORTAR, AND ALL OTHER CONNECTION HARDWARE AND MATERIAL WILL NOT BE MADE SEPARATELY, BUT WILL BE CONSIDERED INCIDENTAL TO THE PRECAST CONCRETE ITEMS.

13. MORTAR, TYPE IV USED IN PRECAST JOINTS, GROUTED CONNECTIONS, FENCE POST CONNECTIONS, AND OTHER LOCATIONS INDICATED IN THE PLANS WILL NOT BE PAID FOR SEPARATELY BUT WILL BE CONSIDERED INCIDENTAL TO THE ADJACENT PRECAST OR CAST-IN-PLACE CONCRETE.

14. MEMBRANE WATERPROOFING, SPRAY APPLIED SHALL BE APPLIED TO THE TOP OF TUNNEL SLAB BETWEEN THE CURBS ON MAIN STREET AND MERCHANT'S ROW. THE MEMBRANE EXTEND UP THE FACE OF CURB THE THICKNESS OF THE PAVEMENT. PAYMENT FOR MEMBRANE WATERPROOFING, SPRAY APPLIED WILL BE MADE UNDER ITEM 519.10, "MEMBRANE WATERPROOFING, SPRAY APPLIED".

15. MEMBRANE WATERPROOFING SHALL BE APPLIED TO THE EXTERIOR OF THE TUNNEL AND U-WALLS ALONG THE TRANSVERSE AND LONGITUDINAL JOINTS. ALONG THE TUNNEL TRANSVERSE JOINTS, MEMBRANE WATERPROOFING SHALL BE APPLIED OVER THE TOP SURFACE (WHERE THE TUNNEL SLAB IS NOT PRESENT) AND DOWN THE SIDEWALLS TO THE BASE OF THE BOTTOM SLAB. ALONG THE U-WALL TRANSVERSE JOINTS, MEMBRANE WATERPROOFING SHALL BE APPLIED FROM THE TOP OF THE JOINT DOWN THE SIDEWALLS TO THE BASE OF THE BOTTOM SLAB. MEMBRANE WATERPROOFING SHALL ALSO BE APPLIED OVER THE TUNNEL AND U-WALL LONGITUDINAL JOINTS. AT THE DISCRETION OF THE ENGINEER, MEMBRANE WATERPROOFING MAY BE OMITTED IN AREAS WHERE ACCESS PREVENTS APPLICATION OF THE WATERPROOFING. PAYMENT FOR SHEET MEMBRANE WATERPROOFING, PREFORMED SHEET WILL BE MADE UNDER ITEM 900.675, "SPECIAL PROVISION (SHEET MEMBRANE WATERPROOFING, SELF ADHESIVE)".

16. AFTER PRECAST ERECTION,THE INSIDE FACE OF THE BOTTOM SLAB OF THE TUNNEL AND U-WALL AT THE TRANSVERSE JOINTS SHALL BE FILLED WITH MORTAR, TYPE IV AND COVERED WITH SHEET MEMBRANE WATERPROOFING FROM TOP OF HAUNCH TO TOP OF HAUNCH. SHEET MEMBRANE WATERPROOFING SHALL BE 2'-0" WIDE AND BE CENTERED ON THE TRANSVERSE JOINTS. PAYMENT FOR SHEET MEMBRANE WATERPROOFING WILL BE MADE UNDER ITEM 900.675, "SPECIAL PROVISION (SHEET MEMBRANE WATERPROOFING, SELF ADHESIVE)". MORTAR, TYPE IV WILL BE CONSIDERED INCIDENTAL TO THE APPROPRIATE PRECAST CONCRETE ITEM.

17. PRIOR TO THE INSTALLATION OF SELF ADHESIVE MEMBRANE, JOINTS ARE TO BE FILLED WITH ELASTOMERIC LIQUID APPLIED WATERPROOFING COMPOUND. ELASTOMERIC LIQUID MEMBRANE TO BE INSTALLED TO THE WIDTH OF THE JOINT OR WITH A MINIMUM THICKNESS OF 3/32".

18. EXPANDING WATERSTOPS IN THE TRANSVERSE AND LOGITUDINAL JOINTS OF THE TUNNEL AND U-WALLS SHOWN IN THE PLANS SHALL BE 0.44"x0.44" (NOMINAL ½") PROFILE FOR THE STANDARD 5/16" JOINT WIDTH AND 0.75"x0.75" (NOMINAL 7/8") PROFILE FOR ¾" JOINT WIDTHS.

19. EXPANDING WATERSTOP SHALL BE A RUBBER BASED CONTROLLED EXPANSION SEALANT. PRODUCT SHALL HAVE A MINIMUM EXPANSION OF 50% AND SHALL SHOW NO SIGNS OF DETERIORATION AFTER 10 CYCLES OF HYDRATION-DEHYDRATION. PRODUCT SHALL BE PROTECTED FROM MOISTURE AND DEBRIS PRIOR TO AND DURING INSTALLATION.

20. BUTYL RUBBER SEALANT SHALL CONFORM TO ASTM C-990. SEALANT DIMENSIONS ARE PROVIDED IN DRAWINGS. PRODUCT SHALL BE PROTECTED FROM MOISTURE AND DEBRIS PRIOR TO AND DURRING INSTALLATION.

21. THE CONTRACTOR IS REPSONSIBLE FOR THE DESIGN OF ALL LIFTING POINTS, LIFTING ATTACHMENTS, AND ALL TEMPORARY HARDWARE (IF NECESSARY) TO DRAW THE PRECAST UNITS TOGETHER. DESIGN CALCULATIONS FOR THE LIFTING ATTACHMENTS AND TEMPORARY HARDWARE SHALL BE SUBMITTED TO THE ENGINEER FOR APPROVAL.

22. LIFTING HOLES AND ALL OTHER RECESSES IN THE PRECAST UNITS SHALL BE FILLED WITH MORTAR, TYPE IV MEETING THE REQUIREMENTS OF SUBSECTION 707.03. ALL COSTS ASSOCIATED WITH PROVIDING AND PLACING THE MORTAR WILL BE CONSIDERED INCIDENTAL TO THE APPROPRIATE 540.10, "PRECAST CONCRETE STRUCTURE" ITEM.

REINFORCING STEEL

23. ALL REINFORCING STEEL USED IN THE PRECAST CONCRETE TUNNEL AND U-WALLS, AND CAST-IN-PLACE CONCRETE WALL CAP SHALL BE LEVEL II (CONTINUOUSLY GALVANIZED), AND ALL REINFORCING STEEL USED IN THE CAST-IN-PLACE CONCRETE TUNNEL SLAB, BRIDGE RAILING, AND SIDEWALKS SHALL BE LEVEL III, MEETING THE REQUIREMENTS OF SECTION 507.

24. ALL REINFORCING STEEL THAT IS EMBEDDED IN PRECAST CONCRETE WILL BE PAID FOR UNDER THE APPROPRIATE PRECAST CONCRETE ITEM. ALL REINFORCING STEEL NOT EMBEDDED IN CONCRETE, USED IN CAST-IN-PLACE CONCRETE WILL BE PAID FOR UNDER ITEM 507.12, "REINFORCING STEEL, LEVEL II (CONTINUOUSLY GALVANIZED)" OR ITEM 507.13, "REINFORCING STEEL, LEVEL III" AS APPROPRIATE.

25. REINFORCING STEEL THAT IS CUT TO FIT SHALL BE COMPLETED AND REPAIRED IN ACCORDANCE WITH SUBSECTION 507.04 OF THE SPECIFICATIONS.

26. TEST BARS SHALL BE PROVIDED IN ACCORDANCE WITH THE "VERMONT AGENCY OF TRANSPORTATION MATERIAL SAMPLING MANUAL" AVAILABLE ON THE AGENCY WEBSITE. ALL COSTS ASSOCIATED WITH PROVIDING BARS FOR TESTING WILL BE CONSIDERED INCIDENTAL TO THE UNIT BID PRICE FOR THE APPROPRIATE PRECAST ITEM.

27. MECHANICAL BAR CONNECTORS AND DOWEL-IN BARS MAY BE HOT-DIPPED GALVANIZED PER ASTM.

PRECAST CONCRETE RETAINING WALL

28. THE DESIGN, CONSTRUCTION, HANDLING, AND ASSEMBLY OF THE PRECAST CONCRETE RETAINING WALL SHALL BE IN ACCORDANCE WITH THE SPECIAL PROVISIONS. HANDLING AND INSTALLATION SHALL BE IN ACCORDANCE WITH THE MANUFACTURER'S RECOMMENDATIONS AS APPLICABLE.

29. THE PRECAST CONCRETE RETAINING WALL WILL BE PAID FOR UNDER ITEM 900.670, "SPECIAL PROVISION (CONCRETE RETAINING WALL).

30. THE DESIGN OF THE WALL SHALL INCORPORATE PROVISIONS FOR ADJACENT OBSTRUCTIONS SUCH AS DRAINAGE FEATURES AND GUARDRAIL POSTS IF NECESSARY. THE WALL DESIGN SHALL ALSO INCLUDE PROVISIONS FOR INSTALLING FENCE POSTS ON TOP OF THE WALL, AS SHOWN IN THE PLANS.

31. DESIGN VALUES:
   A. BACKFILL SOIL PARAMETERS (704.08 - GRANULAR BACKFILL FOR STRUCTURES)
      i. UNIT WEIGHT = 140 LB/FT^3
      ii. FRICTION ANGLE = 34º
   B. REQUIRED DESIGN LIFE = 75 YEARS

WP LAYOUT COORDINATES				
WP #	STR. STATION	RAIL STATION	NORTHING	EASTING
WP 1	50+00.00	19+97.49	552064.0788	1464893.6628
WP 2	50+15.00	20+12.49	552078.6446	1464890.0799
WP 3	50+75.00	20+72.50	552136.7201	1464875.0055
WP 4	51+35.00	21+32.50	552194.4757	1464858.7485
WP 5	51+95.00	21+92.50	552251.8873	1464841.3156
WP 6	52+55.00	22+52.50	552308.9310	1464822.7141
WP 7	53+15.00	23+12.50	552365.5830	1464802.9517
WP 8	54+35.00	24+32.51	552477.6234	1464759.9755
WP 9	55+55.00	25+52.52	552587.8202	1464712.4713

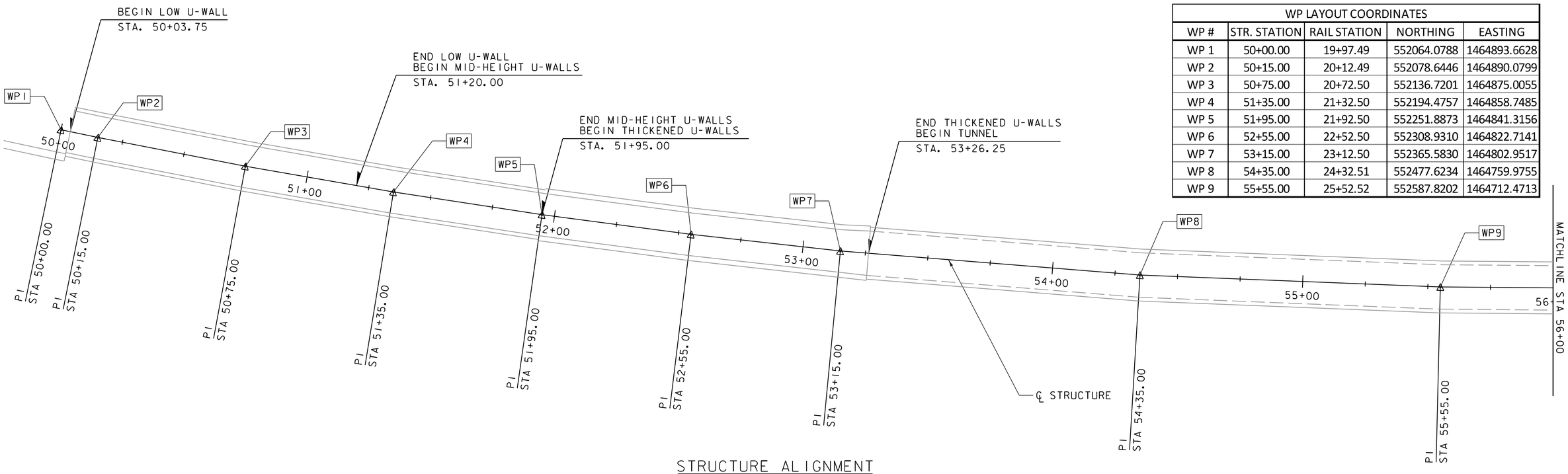

STRUCTURE ALIGNMENT
SCALE 1" = 20'

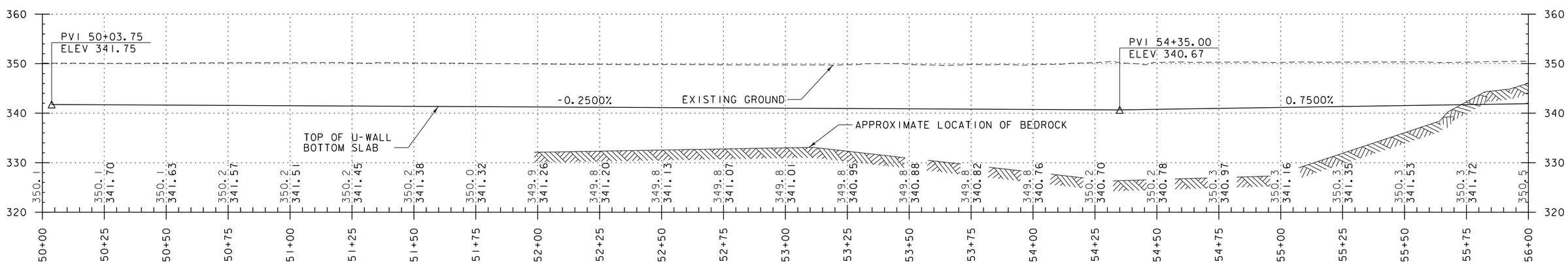

STRUCTURE PROFILE
STA. 50+00 - 56+00
SCALE 1" = 20' HORIZONTAL
1" = 10' VERTICAL

PROJECT NAME: MIDDLEBURY	
PROJECT NUMBER: WCRS(23)	
FILE NAME: zl3g542ali_struct.dgn	PLOT DATE: 4/30/2019
PROJECT LEADER: A.P. GUYETTE	DRAWN BY: K.C. BARRY
DESIGNED BY: R.H. BARNES	CHECKED BY: R.H. BARNES
GEOMETRIC STRUCT. LAYOUT PLAN (1 OF 3)	SHEET 159 OF 328

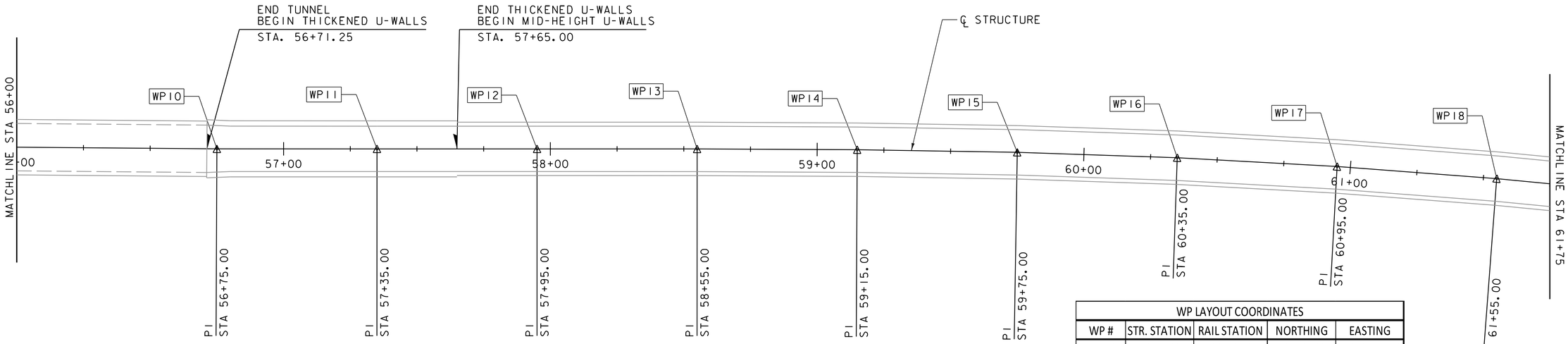

WP LAYOUT COORDINATES				
WP #	STR. STATION	RAIL STATION	NORTHING	EASTING
WP 10	56+75.00	26+72.52	552696.4826	1464661.5549
WP 11	57+35.00	27+32.52	552750.6029	1464635.6513
WP 12	57+95.00	27+92.52	552804.7198	1464609.7406
WP 13	58+55.00	28+52.52	552858.8457	1464583.8487
WP 14	59+15.00	29+12.52	552913.0884	1464558.2025
WP 15	59+75.00	29+72.52	552967.6174	1464533.1708
WP 16	60+35.00	30+32.52	553022.5808	1464509.1078
WP 17	60+95.00	30+92.52	553078.0355	1464486.1998
WP 18	61+55.00	31+52.52	553133.9578	1464464.4582

STRUCTURE ALIGNMENT
SCALE 1" = 20'

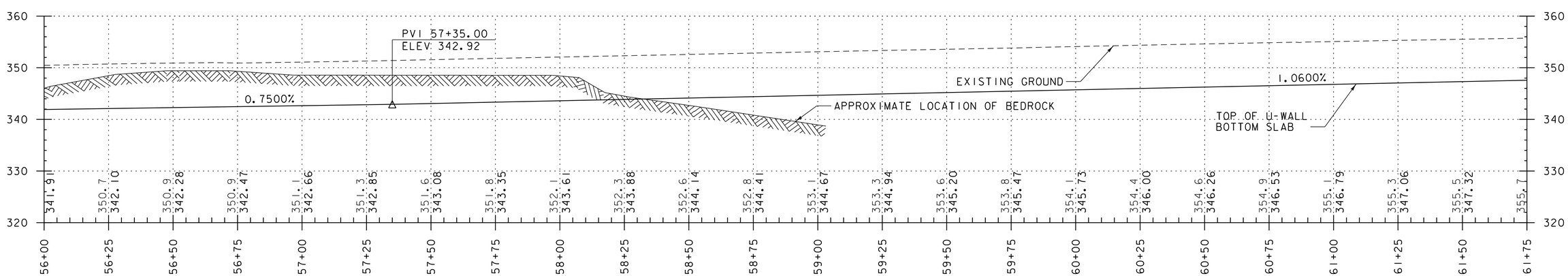

STRUCTURE PROFILE
STA. 56+00 - 61+75
SCALE 1" = 20' HORIZONTAL
1" = 10' VERTICAL

vhb

PROJECT NAME: MIDDLEBURY	
PROJECT NUMBER: WCRS(23)	
FILE NAME: z13g542a11_struct.dgn	PLOT DATE: 4/30/2019
PROJECT LEADER: A.P. GUYETTE	DRAWN BY: K.C. BARRY
DESIGNED BY: R.H. BARNES	CHECKED BY: R.H. BARNES
GEOMETRIC STRUCT. LAYOUT PLAN (2 OF 3)	SHEET 160 OF 328

WP LAYOUT COORDINATES				
WP #	STR. STATION	RAIL STATION	NORTHING	EASTING
WP 19	62+15.00	32+12.52	553190.3231	1464443.8925
WP 20	62+75.00	32+72.52	553247.0943	1464424.4753
WP 21	63+35.00	33+32.52	553304.1521	1464405.9170
WP 22	63+95.00	33+92.53	553361.3648	1464387.8421
WP 23	64+55.00	34+52.52	553418.6165	1464369.8907
WP 24	67+36.25	37+33.77	553686.9855	1464285.7503

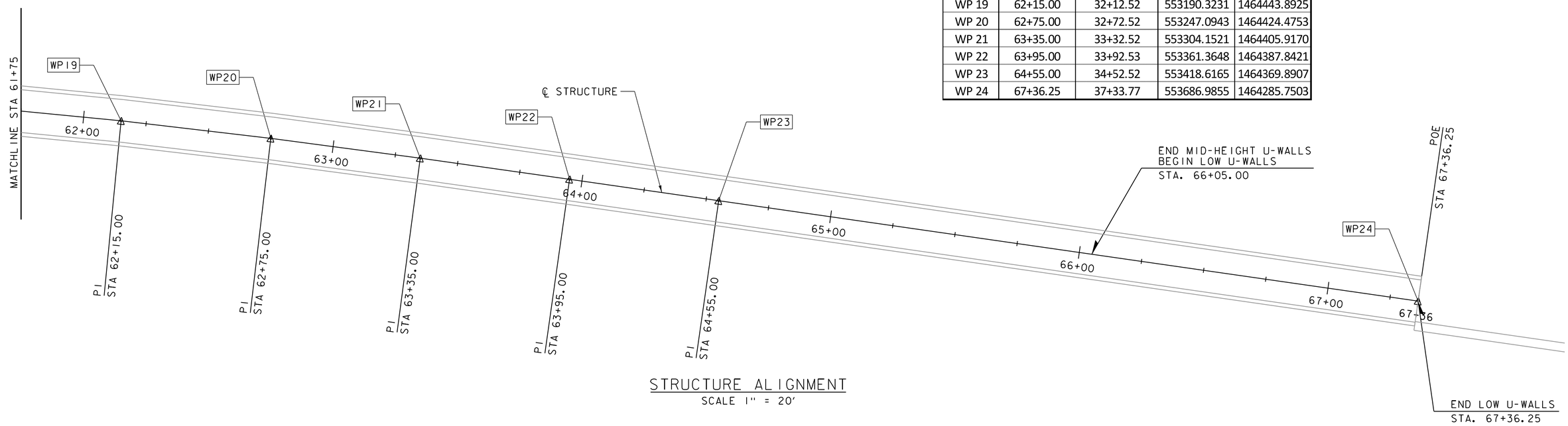

STRUCTURE ALIGNMENT
SCALE 1" = 20'

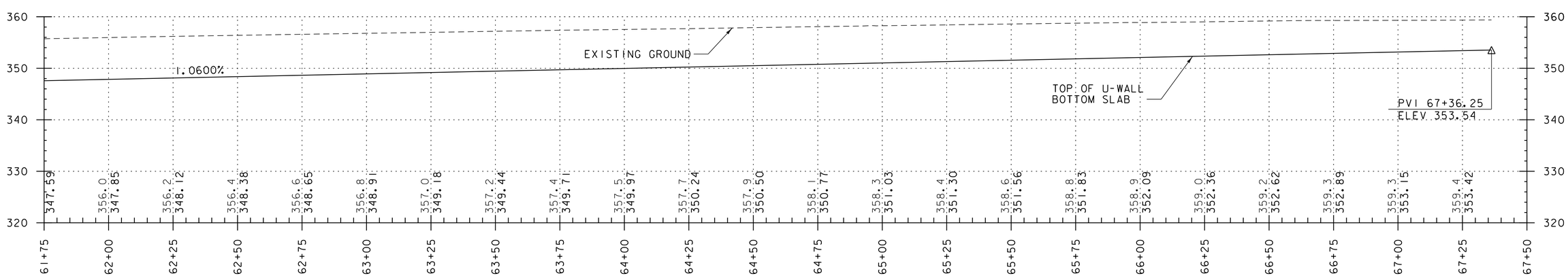

STRUCTURE PROFILE
STA. 61+75 - 67+36
SCALE 1" = 20' HORIZONTAL
1" = 10' VERTICAL

PROJECT NAME: MIDDLEBURY
PROJECT NUMBER: WCRS(23)

FILE NAME: zl3g542ali_struct.dgn
PROJECT LEADER: A.P. GUYETTE
DESIGNED BY: R.H. BARNES
GEOMETRIC STRUCT. LAYOUT PLAN (3 OF 3)

PLOT DATE: 4/30/2019
DRAWN BY: K.C. BARRY
CHECKED BY: R.H. BARNES
SHEET 161 OF 328

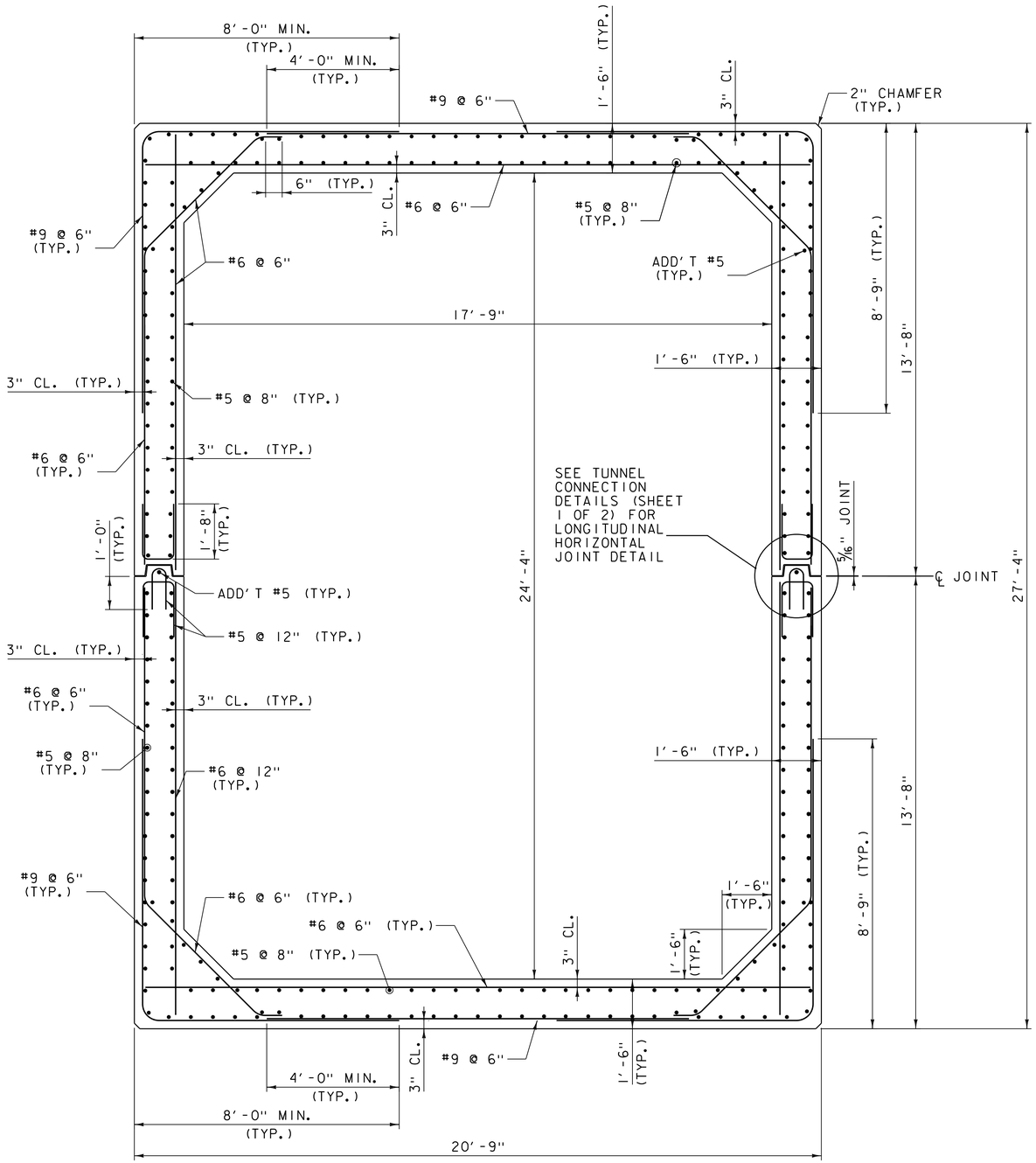

TYPICAL TUNNEL SECTION - REINFORCING DETAIL

STA. 53+26.25 - STA. 56+71.25

SCALE: ½" = 1'-0"

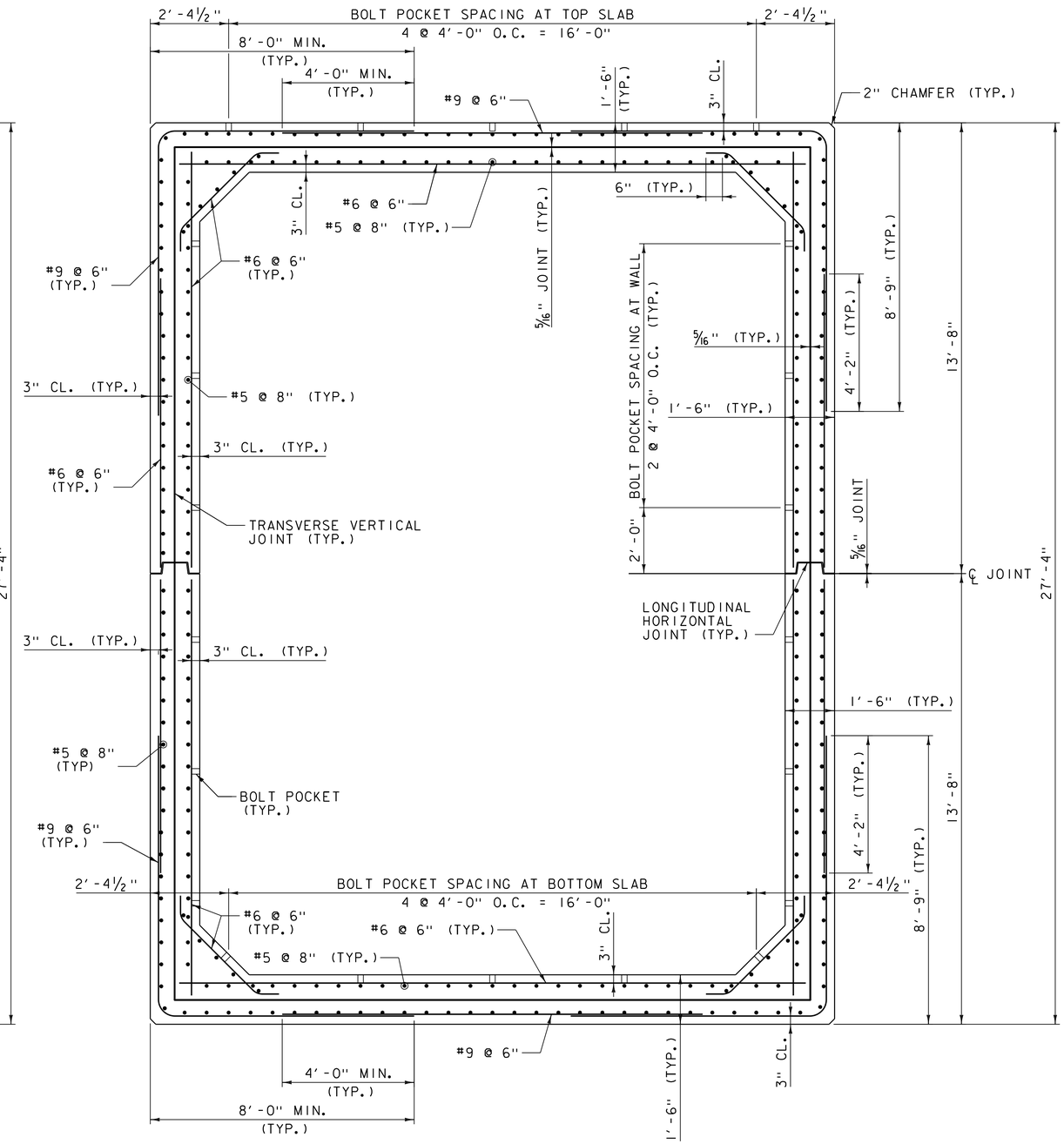

TYPICAL TUNNEL SECTION AT TRANSVERSE VERTICAL JOINT

STA. 53+26.25 - STA. 56+71.25

SCALE: ½" = 1'-0"

STATE OF VERMONT
JEFFREY J. LONG
NO. 91944
STRUCTURAL
LICENSED PROFESSIONAL ENGINEER
4/30/2019

MOTT MACDONALD

vhb

PROJECT NAME: MIDDLEBURY	
PROJECT NUMBER: WCRS(23)	
FILE NAME: zl3g542tunnel.dgn	PLOT DATE: 4/30/2019
PROJECT LEADER: A.P. GUYETTE	DRAWN BY: L.J. TONG
DESIGNED BY: L.J. TONG	CHECKED BY: J.A. PITTSINGER
TUNNEL SECTIONS	SHEET 162 OF 328

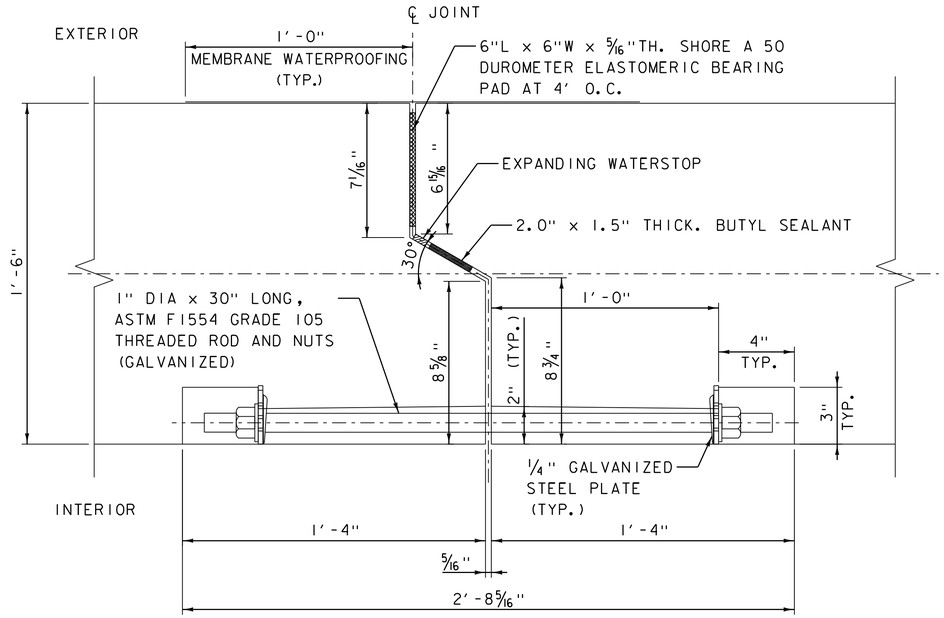

NOTE: THE TRANSVERSE VERTICAL JOINT AT BOTTOM SLAB SIMILAR

TRANSVERSE VERTICAL JOINT AT WALL

SCALE: 3" = 1'-0"

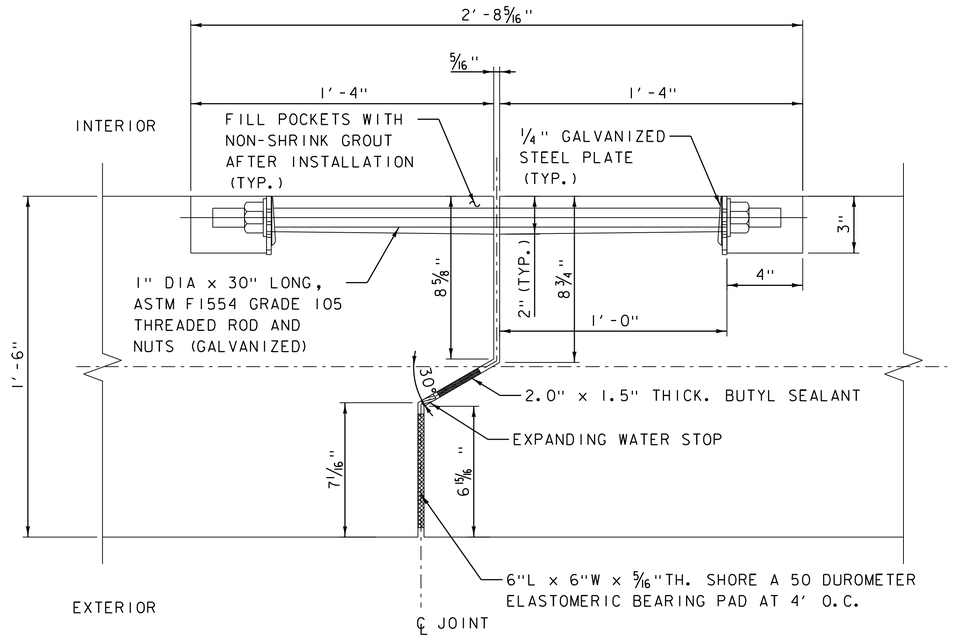

TRANSVERSE VERTICAL JOINT AT BOTTOM SLAB

SCALE: 3" = 1'-0"

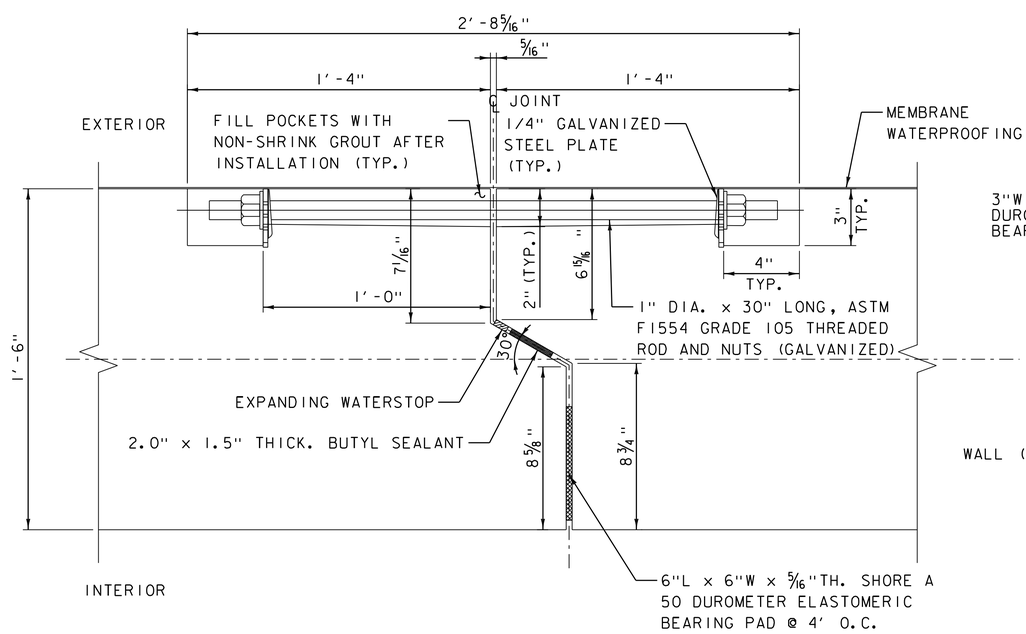

TRANSVERSE VERTICAL JOINT AT TOP SLAB

SCALE: 3" = 1'-0"

* 2'-0" WIDE STRIP UNDER VILLAGE GREEN

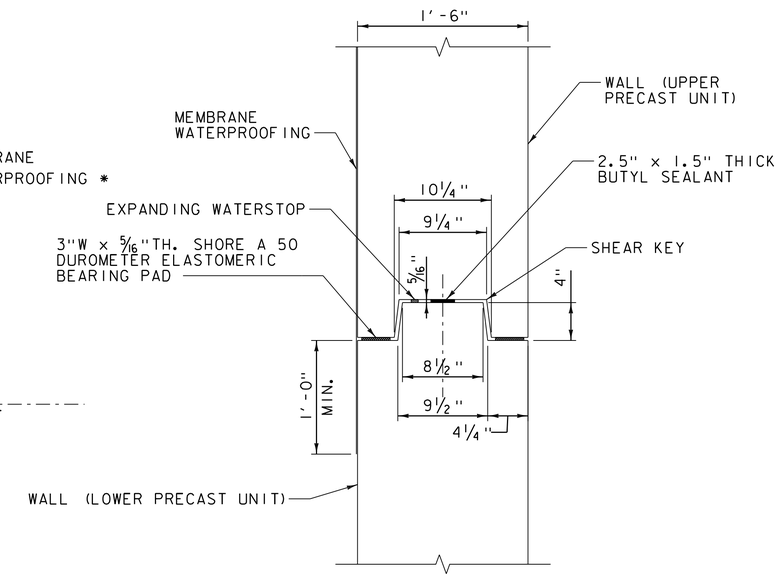

NOTE: SEE TUNNEL SECTIONS SHEET FOR REINFORCEMENT DETAILS.

LONGITUDINAL HORIZONTAL JOINT

SCALE: 1

NOTES

1. CONNECTION BOLTS TO BE PRETENSIONED TO A MINIMUM OF 6 KIPS.
2. DURING ERECTION A MINIMUM OF FIVE BOLTS MUST BE INSTALLED AND PRETENSIONED PRIOR TO CONTINUING WITH THE NEXT PRECAST PIECE. BOLT PLACEMENT SHALL BE AT THE CONNECTIONS IN EACH HAUNCH (2), AT THE CONNECTION CLOSEST TO THE HORIZONTAL JOINT (2), AND CONNECTION AT THE MID-POINT OF THE SLAB (1).
3. VERTICAL JOINTS BETWEEN TWO ADJACENT PRECAST PIECES CAN VARY BETWEEN 5/16 INCH AND 3/4 INCH TO ACCOMMODATE INSTALLATION TOLERANCES. ELASTOMERIC BEARING PAD SHALL BE FITTED TO ALLOW FOR FULL BEARING AT ALL COMPLETED GAP WIDTHS.
4. WASHERS SHALL BE DIRECT TENSION INDICATORS IN ACCORDANCE WITH SUBSECTION 714.12 OF THE SPECIFICATIONS.
5. DIMENSIONS OF THE THREADED CONNECTION ROD NUT POCKETS MAY BE MODIFIED AS NECESSARY TO ALLOW CLEARANCE FOR NUT TORQUING. THE THREADED CONNECTION ROD NUT POCKET DIMENSIONS SHALL BE INDICATED IN THE FABRICATION DRAWINGS AND APPROVED BY THE ENGINEER.

STATE OF VERMONT JEFFREY J. LONG NO. 91944 STRUCTURAL LICENSED PROFESSIONAL ENGINEER 4/30/2019

MOTT MACDONALD

vhb

PROJECT NAME: MIDDLEBURY	
PROJECT NUMBER: WCRS(23)	
FILE NAME: zl3g542sup.dgn	PLOT DATE: 4/30/2019
PROJECT LEADER: A.P. GUYETTE	DRAWN BY: L.J. TONG
DESIGNED BY: L.J. TONG	CHECKED BY: J.A. PITTSINGER
TUNNEL CONNECTION DETAILS (SHEET 1 OF 2)	SHEET 163 OF 328

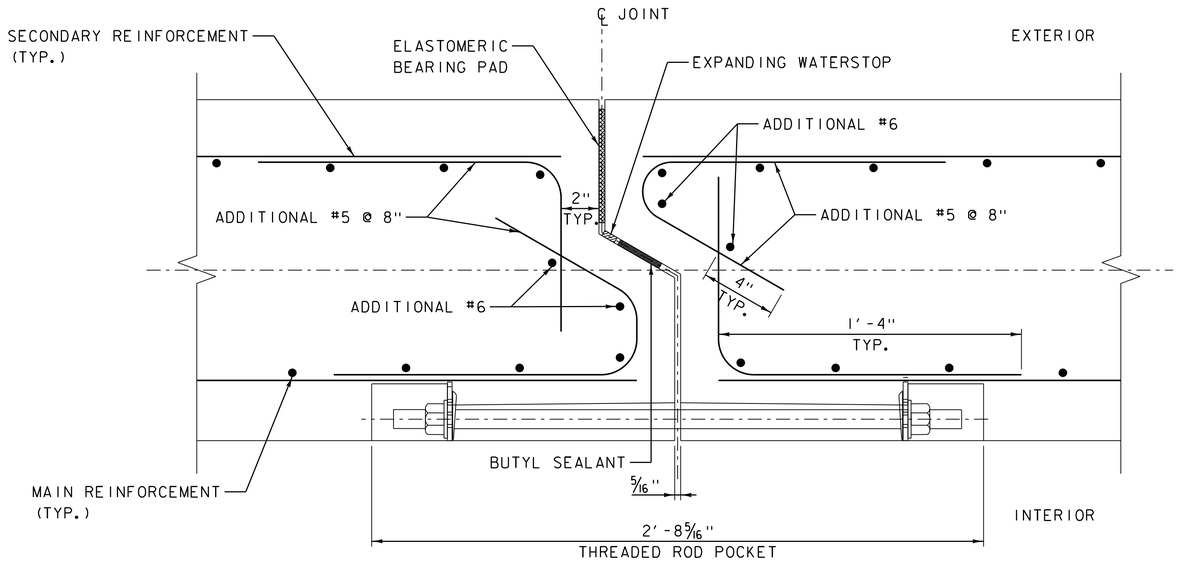

NOTES:
1. SEE TUNNEL SECTIONS SHEET FOR PRECAST CONCRETE FRAME REINFORCEMENT.
2. THE ADDITIONAL REINFORCEMENT OF WALL AND BOTTOM SLAB SHOWN, THE TOP SLAB IS SIMILAR.

TRANSVERSE VERTICAL JOINT - ADDITIONAL REINFORCEMENT

SCALE: 3" = 1'-0"

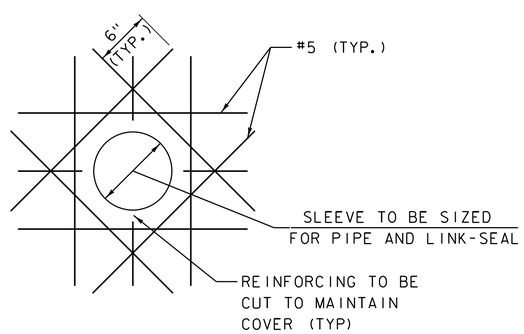

ADDITIONAL REINFORCEMENT FOR OPENING AT TUNNEL PIECE TYPE C

NOT TO SCALE

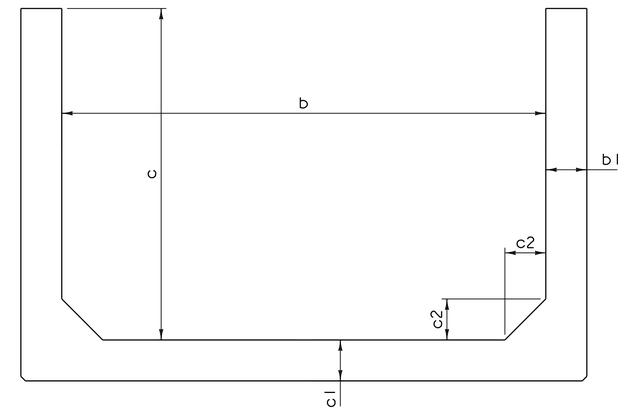

CROSS SECTION

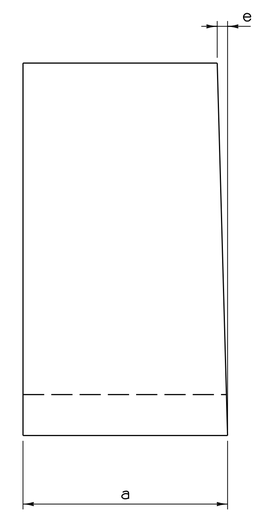

LONGITUDINAL SECTION

DIMENSION	TOLERANCE
a = LENGTH	-1/2", +1/2"
b = SPAN	+/- 1/4"
b1 = THICKNESS OF WALLS	+/- 1/4"
c = RISE	+/- 1/4"
c1 = SLAB THICKNESS	-3/16", +1/4"
c2 = HAUNCH	+/- 1/4"
e = VARIATION IN LENGTH OF OPPOSITE SURFACES	+/- 1/2"

PRECAST TUNNEL AND U-WALL FABRICATION TOLERANCES

NOT TO SCALE

STATE OF VERMONT JEFFREY J. LONG NO. 91944 STRUCTURAL LICENSED PROFESSIONAL ENGINEER
4/30/2019

MOTT MACDONALD

vhb

PROJECT NAME: MIDDLEBURY	
PROJECT NUMBER: WCRS(23)	
FILE NAME: z13g542sup.dgn	PLOT DATE: 4/30/2019
PROJECT LEADER: A.P. GUYETTE	DRAWN BY: L.J. TONG
DESIGNED BY: L.J. TONG	CHECKED BY: J.A. PITTSINGER
TUNNEL CONNECTION DETAILS (SHEET 2 OF 2)	SHEET 164 OF 328

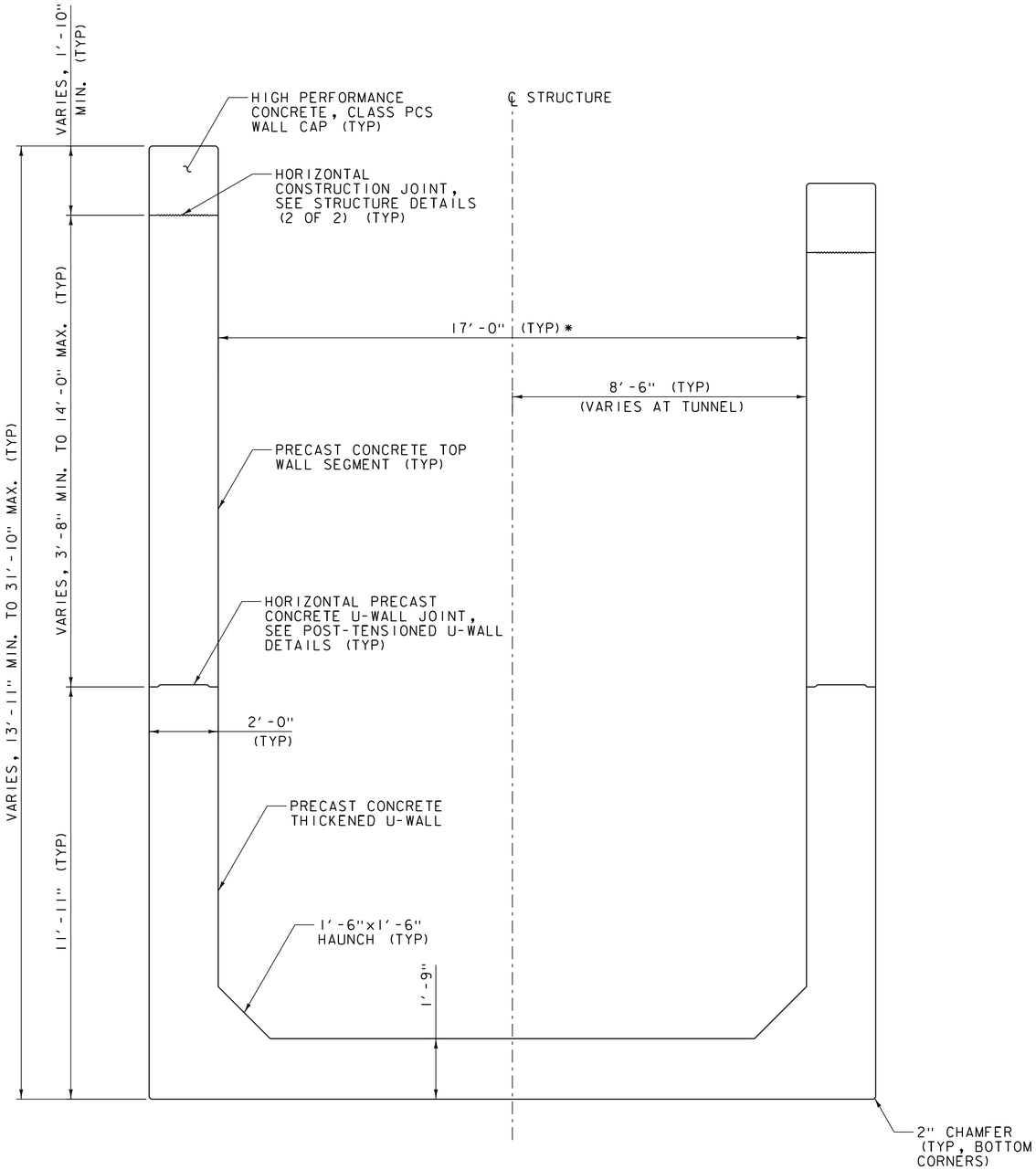

* DIMENSION INCREASES TO 17'-9" AT TUNNEL

THICKENED U-WALL SECTION

STA. 51+95.00 - STA. 53+26.25
STA. 56+71.25 - STA. 57+65.00
SCALE ½" = 1'-0"

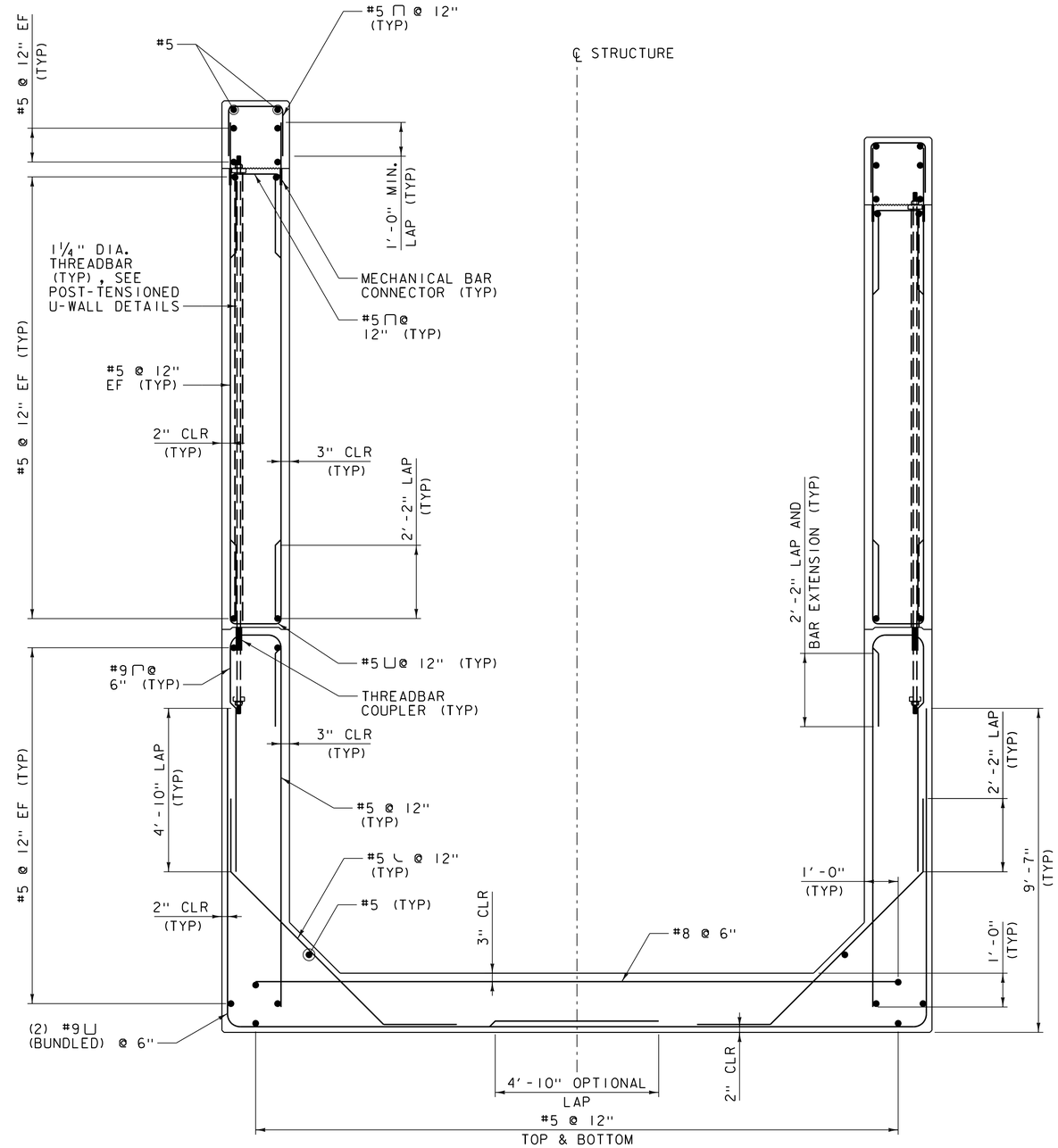

THICKENED U-WALL SECTION - REINFORCING

SCALE ½" = 1'-0"

NOTES

1. NOT ALL THICKENED U-WALL SIDE WALLS HAVE A PRECAST CONCRETE TOP WALL SEGMENT. THICKENED U-WALL SIDE WALLS WITHOUT A TOP WALL SEGMENT SHALL NOT HAVE THE THREADBAR AND ASSOCIATED POST-TENSION HARDWARE. SEE STRUCTURE DETAILS (2 OF 2) FOR CAST-IN-PLACE WALL CAP DETAIL FOR THICKENED U-WALL WITHOUT TOP WALL SEGMENT.
2. OVERALL MIN. AND MAX. WALL HEIGHTS AND PRECAST PIECE HEIGHTS ARE SHOWN HERE FOR REFERENCE ONLY. REFER TO U-WALL PLAN AND PROFILE SHEETS AND U-WALL PIECE DETAILS FOR THICKENED U-WALL STATION LIMITS AND ACTUAL HEIGHTS.
3. POST-TENSION ANCHORAGE TIE-BACK REINFORCING NOT SHOWN FOR CLARITY.

NOTE:

NF = NEAR FACE
FF = FAR FACE
EF = EACH FACE
▲ = CUT TO FIT IN FIELD
3" CLEAR, UNLESS OTHERWISE SPECIFIED ON THE PLANS.
2'-2" BAR LAP UNLESS OTHERWISE SPECIFIED ON THE PLANS.

vhb

PROJECT NAME: MIDDLEBURY	
PROJECT NUMBER: WCRS(23)	
FILE NAME: zl3g542uwall.dgn	PLOT DATE: 4/30/2019
PROJECT LEADER: A.P. GUYETTE	DRAWN BY: R.H. BARNES
DESIGNED BY: R.H. BARNES	CHECKED BY: K.C. BARRY
U-WALL SECTIONS (1 OF 3)	SHEET 165 OF 328

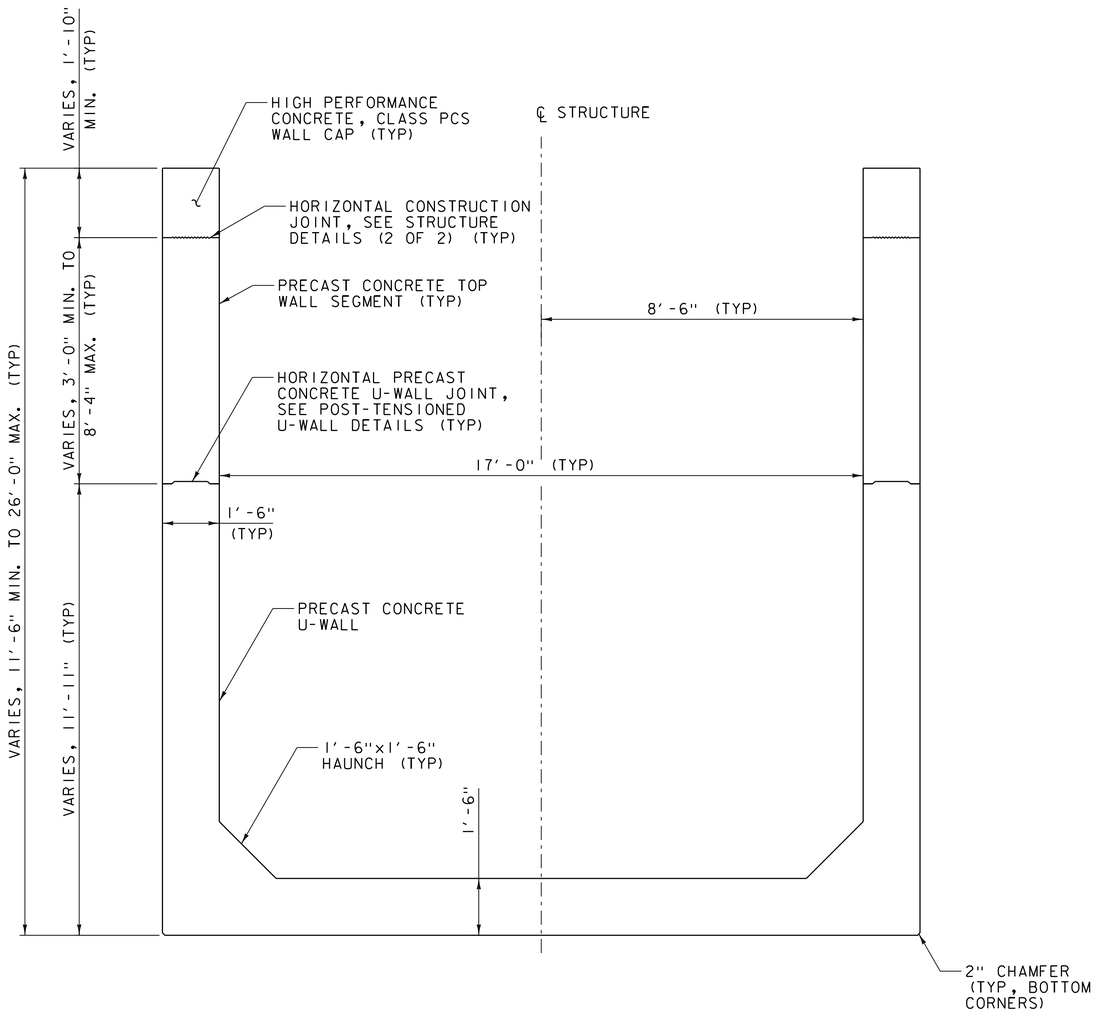

MID-HEIGHT U-WALL SECTION

STA. 51+20.00 - STA. 51+95.00
STA. 57+65.00 - STA. 66+05.00

SCALE ½" = 1'-0"

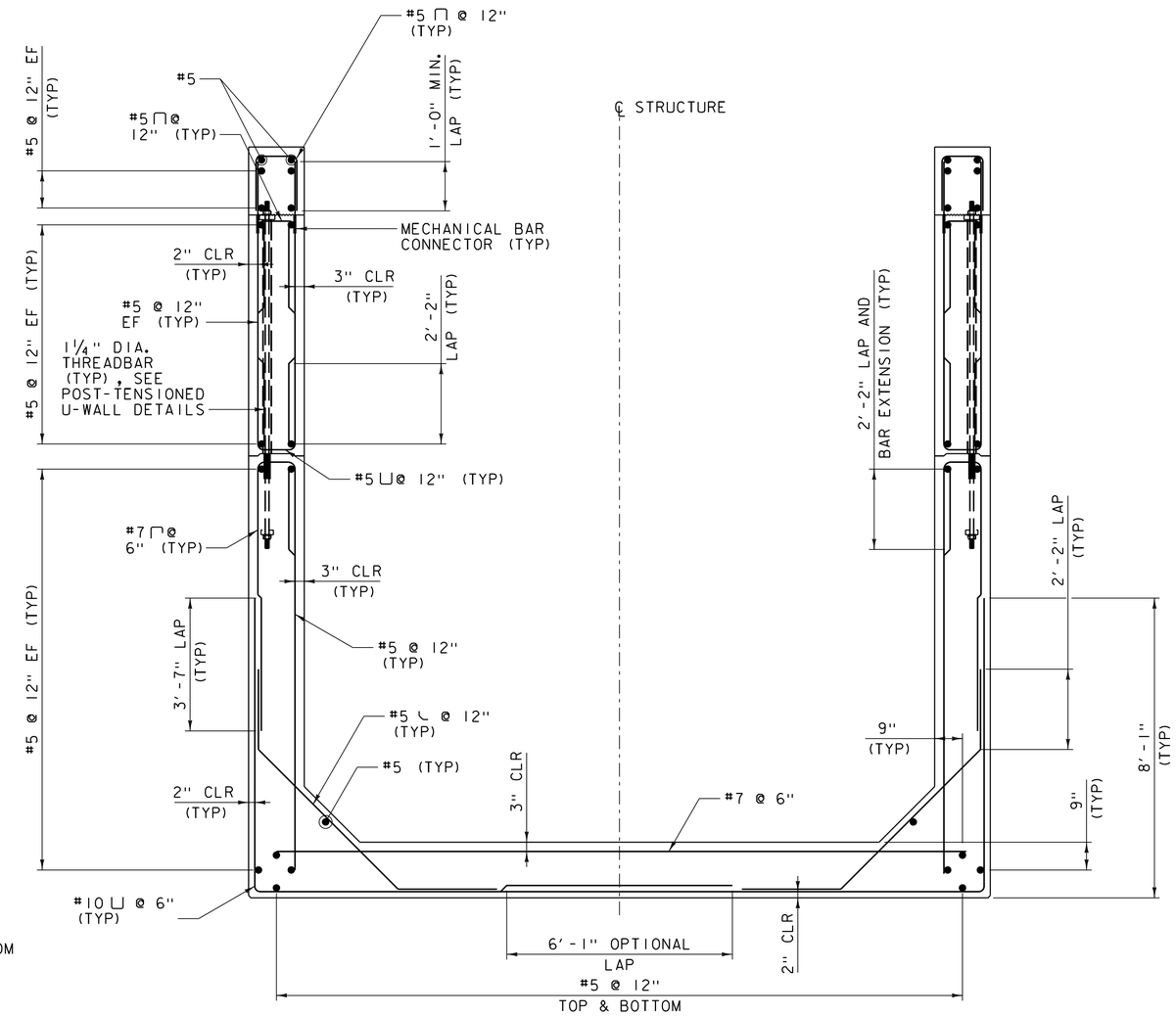

MID-HEIGHT U-WALL SECTION - REINFORCING

SCALE ½" = 1'-0"

NOTES

1. NOT ALL MID-HEIGHT U-WALL SIDE WALLS HAVE A PRECAST CONCRETE TOP WALL SEGMENT. MID-HEIGHT U-WALL SIDE WALLS WITHOUT A TOP WALL SEGMENT SHALL NOT HAVE THE THREADBAR AND ASSOCIATED POST-TENSION HARDWARE. SEE STRUCTURE DETAILS (2 OF 2) FOR CAST-IN-PLACE WALL CAP DETAIL FOR MID-HEIGHT U-WALL WITHOUT TOP WALL SEGMENT.
2. OVERALL MIN. AND MAX. WALL HEIGHTS AND PRECAST PIECE HEIGHTS ARE SHOWN HERE FOR REFERENCE ONLY. REFER TO U-WALL PLAN AND PROFILE SHEETS AND U-WALL PIECE DETAILS FOR U-WALL STATION LIMITS AND ACTUAL HEIGHTS.
3. POST-TENSION ANCHORAGE TIE-BACK REINFORCING NOT SHOWN FOR CLARITY.

NOTE:

NF = NEAR FACE
FF = FAR FACE
EF = EACH FACE
▲ = CUT TO FIT IN FIELD
3" CLEAR, UNLESS OTHERWISE SPECIFIED ON THE PLANS.
2'-2" BAR LAP UNLESS OTHERWISE SPECIFIED ON THE PLANS.

PROJECT NAME: MIDDLEBURY	
PROJECT NUMBER: WCRS(23)	
FILE NAME: zl3g542uwall.dgn	PLOT DATE: 4/30/2019
PROJECT LEADER: A.P. GUYETTE	DRAWN BY: M.F. SUFFEL
DESIGNED BY: K.C. BARRY	CHECKED BY: R.H. BARNES
U-WALL SECTIONS (2 OF 3)	SHEET 166 OF 328

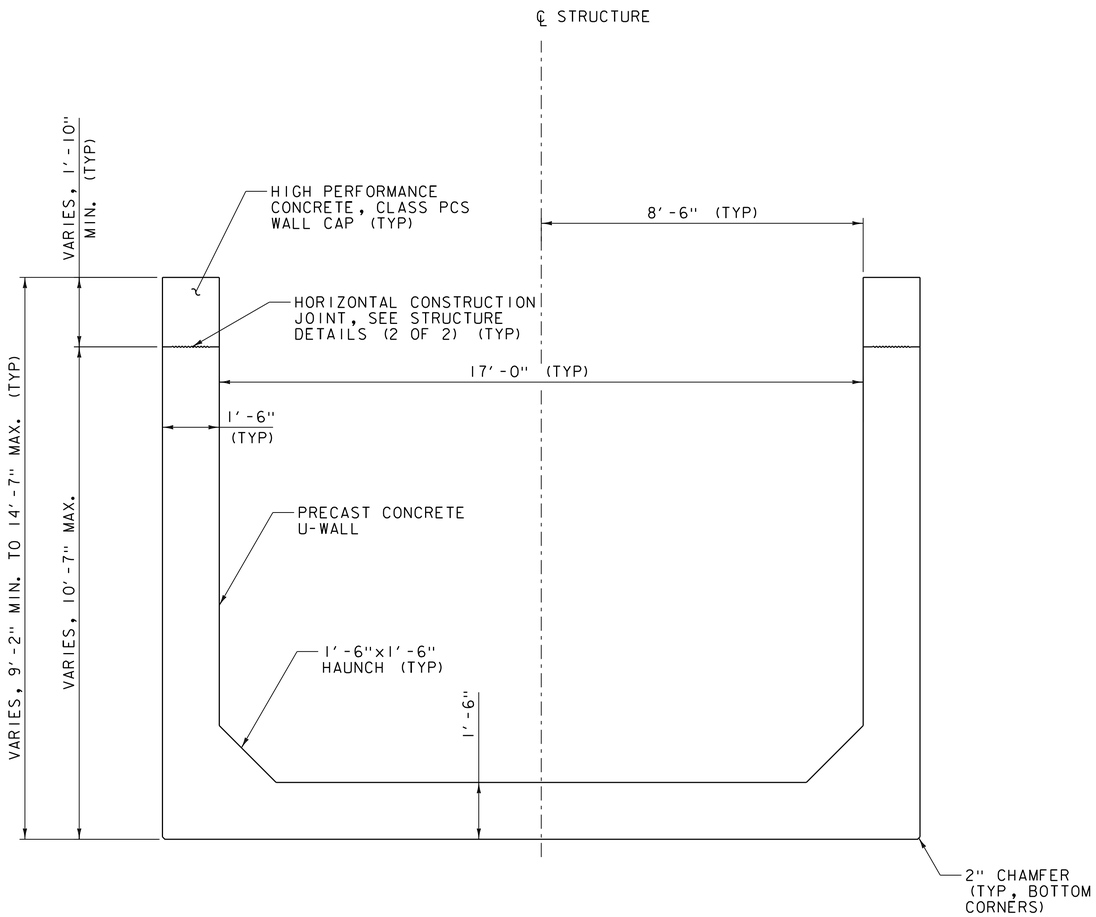

LOW U-WALL SECTION

STA. 50+03.75 - STA. 51+20.00
STA. 66+05.00 - STA. 67+36.25

SCALE ½" = 1'-0"

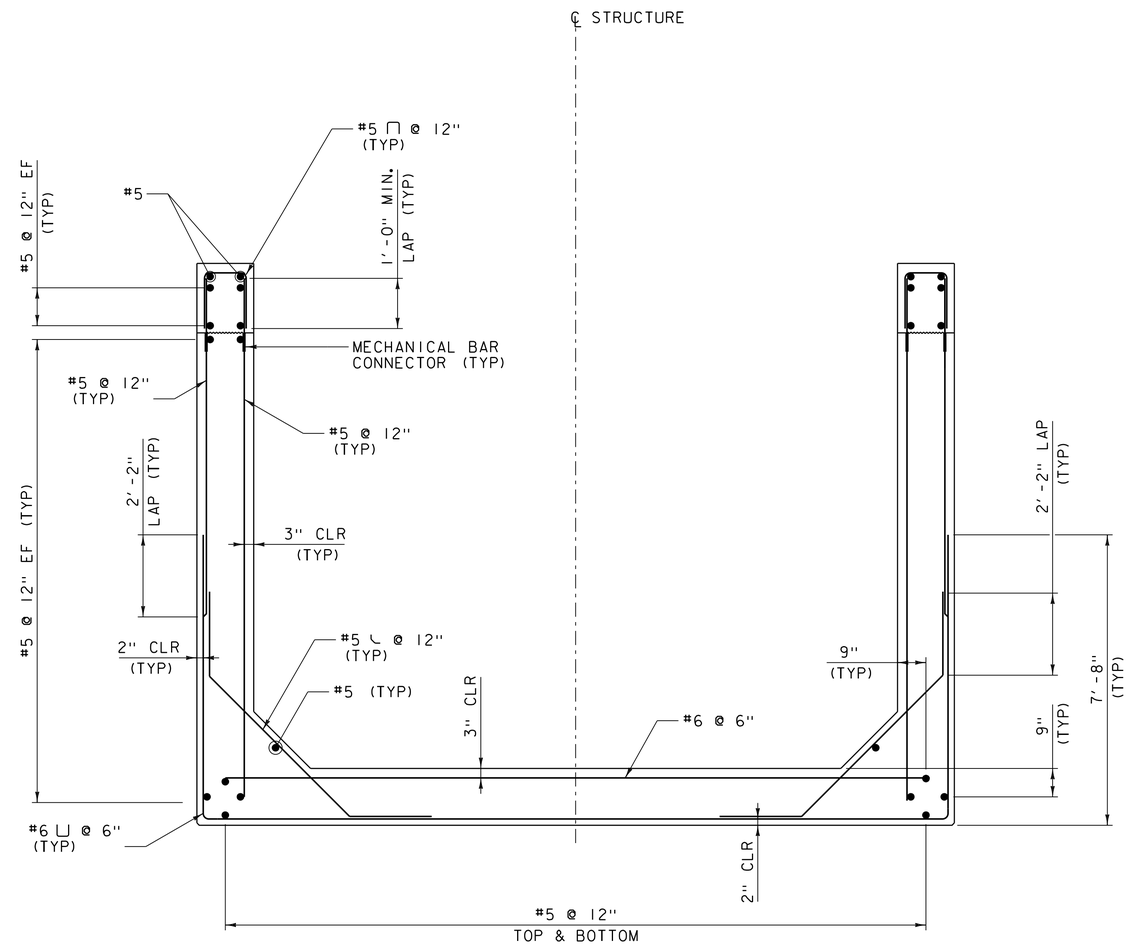

LOW U-WALL SECTION - REINFORCING

SCALE ½" = 1'-0"

NOTES

1. OVERALL MIN. AND MAX. WALL HEIGHTS AND PRECAST PIECE HEIGHTS ARE SHOWN HERE FOR REFERENCE ONLY. REFER TO U-WALL PLAN AND PROFILE SHEETS AND U-WALL PIECE DETAILS FOR THICKENED U-WALL STATION LIMITS AND ACTUAL HEIGHTS.

NOTE:

NF = NEAR FACE
FF = FAR FACE
EF = EACH FACE
▲ = CUT TO FIT IN FIELD
3" CLEAR, UNLESS OTHERWISE SPECIFIED ON THE PLANS.
2'-2" BAR LAP UNLESS OTHERWISE SPECIFIED ON THE PLANS.

PROJECT NAME: MIDDLEBURY	
PROJECT NUMBER: WCRS(23)	
FILE NAME: zl3g542uwall.dgn	PLOT DATE: 4/30/2019
PROJECT LEADER: A.P. GUYETTE	DRAWN BY: M.F. SUFFEL
DESIGNED BY: K.C. BARRY	CHECKED BY: R.H. BARNES
U-WALL SECTIONS (3 OF 3)	SHEET 167 OF 328

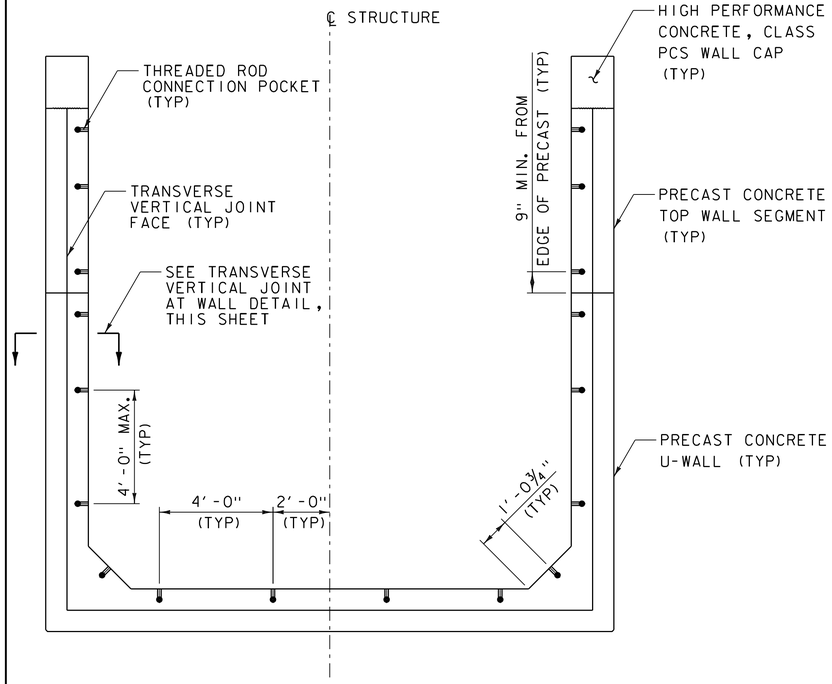

U-WALL CONNECTION SECTION

SCALE ⅜" = 1'-0"

NOTES

1. THREADED ROD CONNECTION POCKETS SHALL BE FILLED WITH MORTAR, TYPE IV. PAYMENT FOR FILLING THE THREADED ROD CONNECTION POCKETS WITH MORTAR, TYPE IV WILL BE CONSIDERED INCIDENTAL TO THE APPROPRIATE PRECAST CONCRETE ITEM.
2. BEARING PADS, WATERSTOP, AND SEALANT NOT SHOWN IN U-WALL CONNECTION SECTION.
3. CONNECTION TO PRECAST CONCRETE TOP WALL SEGMENT NOT SHOWN FOR CLARITY.
4. DURING ERECTION A MINIMUM OF EIGHT BOLTS MUST BE INSTALLED AND PRETENSIONED PRIOR TO CONTINUING WITH THE NEXT PRECAST PIECE. BOLT PLACEMENT SHALL BE AT THE CONNECTIONS IN EACH HAUNCH (2), IN THE SIDEWALLS (4), INCLUDING THE CONNECTION CLOSEST TO THE HORIZONTAL JOINT, AND CONNECTION CENTERED ON THE MID-POINT OF THE SLAB (2).
5. SEE TUNNEL CONNECTION DETAILS (SHEET 1 OF 2) FOR ADDITIONAL CONNECTION NOTES.
6. TRANSVERSE THREADED CONNECTION RODS SHALL BE INSTALLED AND PRETENSIONED PRIOR TO TENSIONING VERTICAL THREADBARS FOR POST-TENSIONED TOP WALL SEGMENT CONNECTION.
7. DIMENSIONS OF THE THREADED CONNECTION ROD NUT POCKETS MAY BE MODIFIED AS NECESSARY TO ALLOW CLEARANCE FOR NUT TORQUING. THE THREADED CONNECTION ROD NUT POCKET DIMENSIONS SHALL BE INDICATED IN THE FABRICATION DRAWINGS AND APPROVED BY THE ENGINEER.

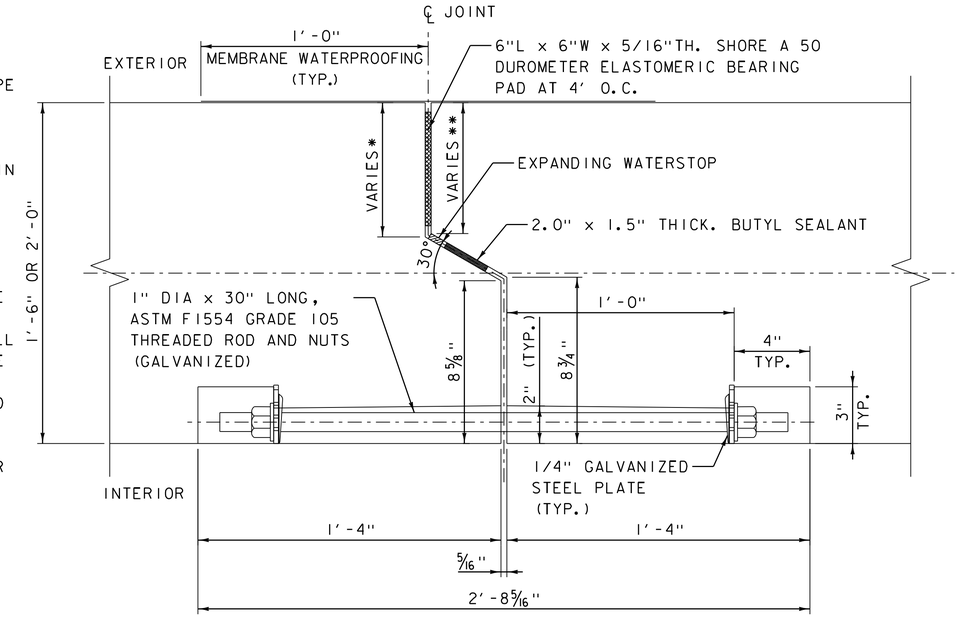

* 7 1/16" FOR 1'-6" SIDEWALL, 1'-1 1/16" FOR 2'-0" SIDEWALL

TRANSVERSE VERTICAL JOINT AT WALL

SCALE: 3" = 1'-0"

** 6 15/16 " FOR 1'-6" SIDEWALL, 1'-0 15/16 " FOR 2'-0" SIDEWALL

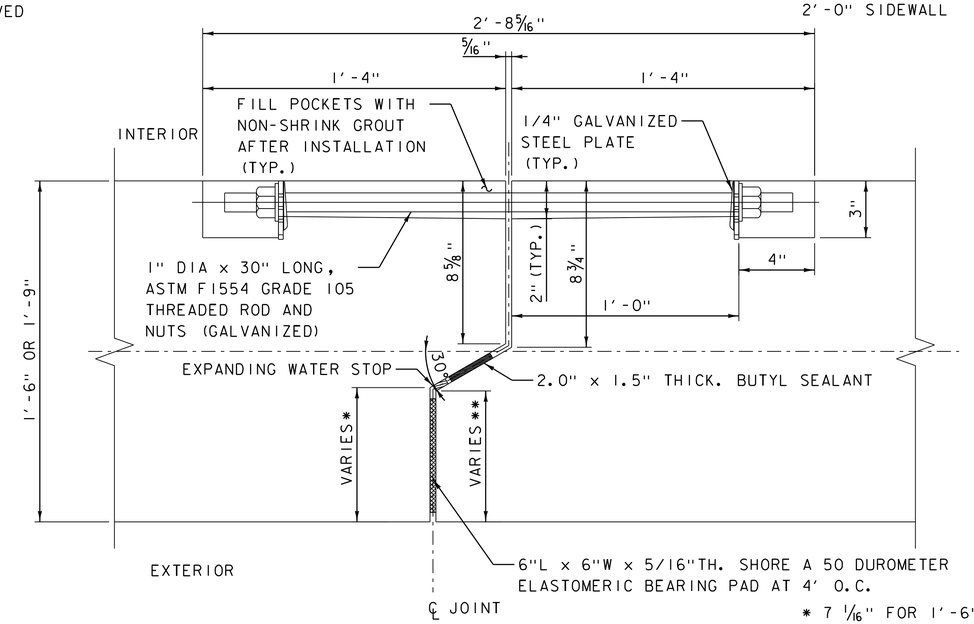

* 7 1/16" FOR 1'-6" SLAB, 10 1/16" FOR 1'-9" SLAB

TRANSVERSE VERTICAL JOINT AT BOTTOM SLAB

SCALE: 3" = 1'-0"

** 6 15/16 " FOR 1'-6" SLAB, 9 15/16 " FOR 1'-9" SLAB

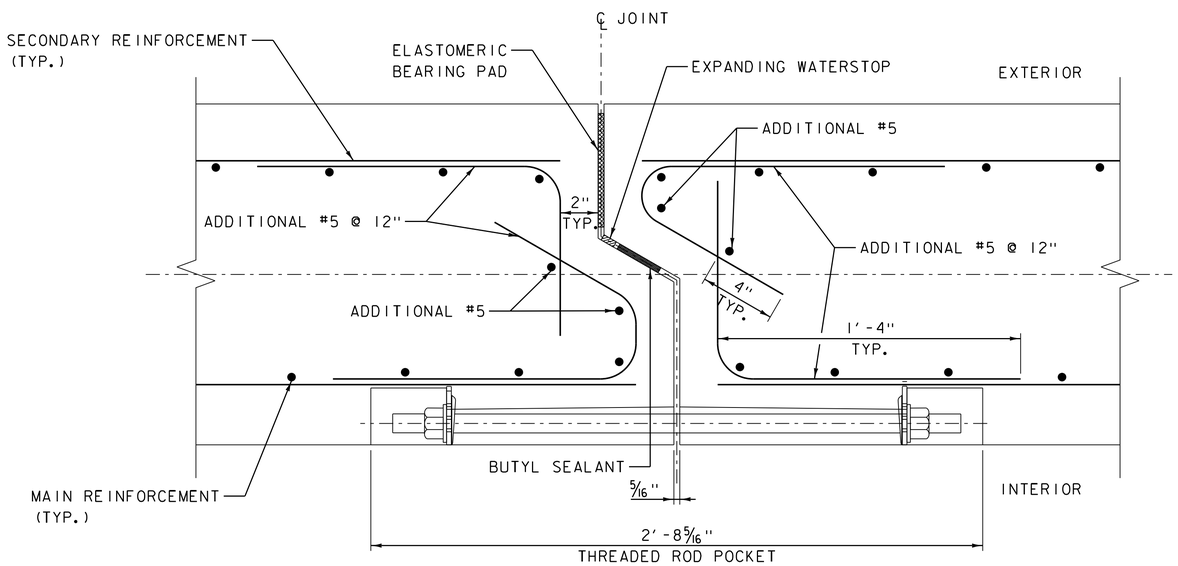

NOTES:
1. SEE U-WALL SECTIONS SHEET FOR PRECAST CONCRETE REINFORCEMENT.

TRANSVERSE VERTICAL JOINT - ADDITIONAL REINFORCEMENT

SCALE: 3" = 1'-0"

PROJECT NAME: MIDDLEBURY	
PROJECT NUMBER: WCRS(23)	
FILE NAME: zl3g542sup.dgn	PLOT DATE: 4/30/2019
PROJECT LEADER: A.P. GUYETTE	DRAWN BY: R.H. BARNES
DESIGNED BY: VHB/MM	CHECKED BY: VHB
U-WALL CONNECTION DETAILS (1 OF 2)	SHEET 168 OF 328

VHB 57603

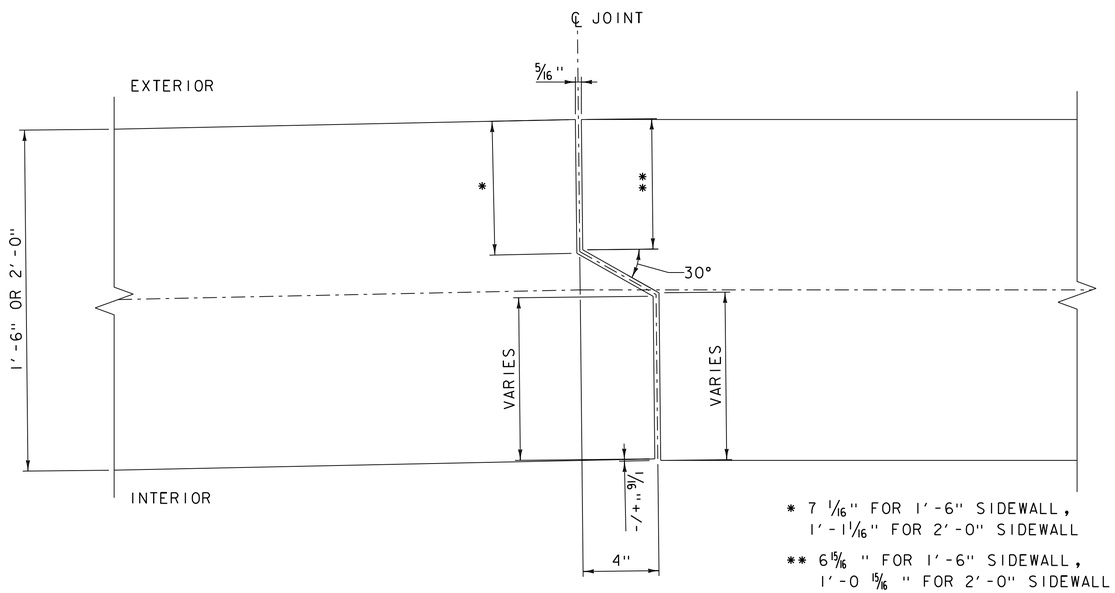

TRANSVERSE VERTICAL JOINT AT WALL - ANGLE TRANSITION

SCALE: 3" = 1'-0"

NOTE: SEE U-WALL CONNECTION DETAILS (1 OF 2) FOR DETAILS NOT SHOWN.

PROJECT NAME: MIDDLEBURY	
PROJECT NUMBER: WCRS(23)	
FILE NAME: zl3g542sup.dgn	PLOT DATE: 4/30/2019
PROJECT LEADER: A.P. GUYETTE	DRAWN BY: R.H. BARNES
DESIGNED BY: VHB/MM	CHECKED BY: VHB
U-WALL CONNECTION DETAILS (2 OF 2)	SHEET 169 OF 328

VHB 57603

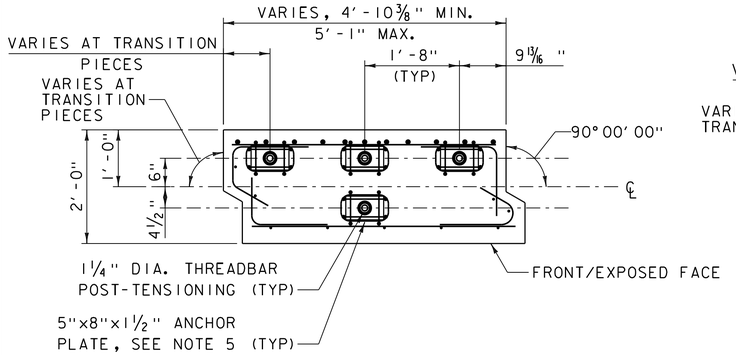

PLAN

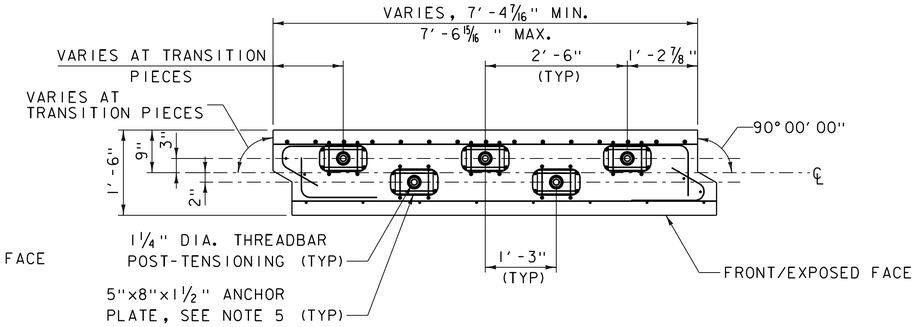

PLAN

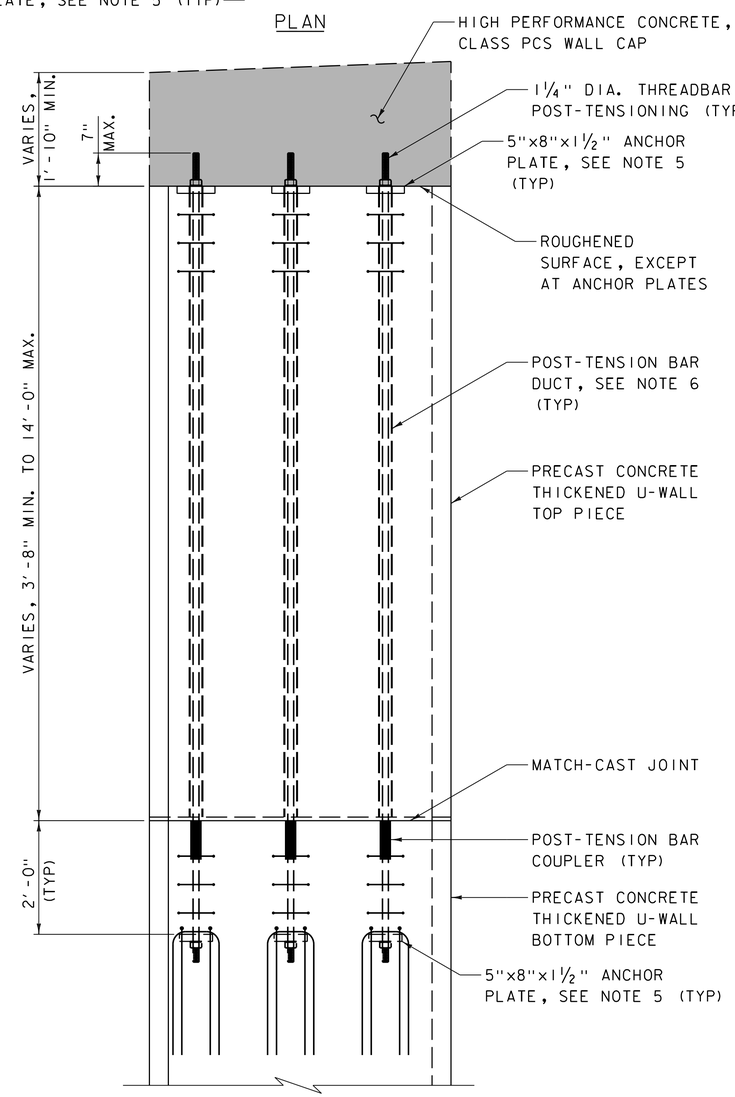

ELEVATION

THICKENED U-WALL TOP PIECE DETAILS

SCALE 3/4" = 1'-0"

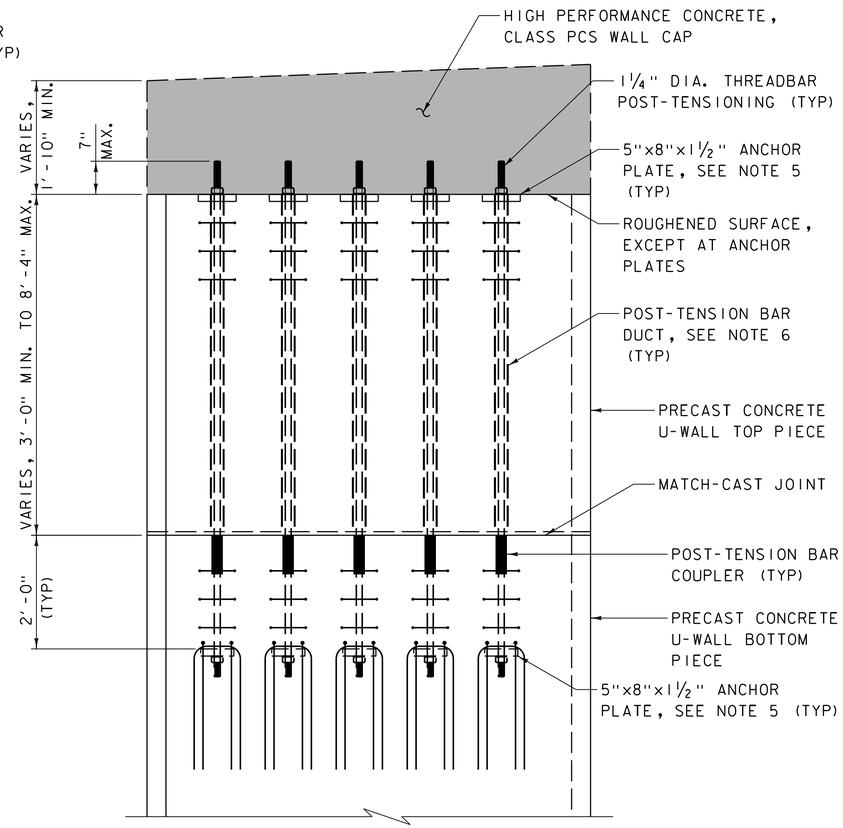

ELEVATION

U-WALL TOP PIECE DETAILS

SCALE 3/4" = 1'-0"

NOTES

1. THREADBAR SHALL BE GRADE 150, HIGH STRENGTH DEFORMED THREAD BARS, TYPE II, CONFORMING TO THE REQUIREMENTS OF ASTM A722. THREADBAR COUPLERS SHALL CONFORM TO ASTM A722.
2. THREADBARS SHALL BE PULLED TO A MAXIMUM OF 120 KSI AND LOCKED OFF AT A MAXIMUM OF 105 KSI. THREADBARS MAY BE PULLED TO A MAXIMUM OF 135 KSI PRIOR TO SEATING TO OFFSET SEATING AND FRICTION LOSSES.
3. GROUT SHALL BE INSTALLED IN THE POST-TENSIONED BAR DUCTS PER THE SPECIAL PROVISIONS. GROUT PORTS AND VENTS SHALL BE PER THE POST-TENSION SUPPLIER. GROUT PORTS AND VENTS NOT SHOWN.
4. THE DESIGN IS BASED ON THE FOLLOWING:
   FRICTION COEFFICIENTS, K = 0.0002
   μ = 0.15 REQUIRED ANCHOR SET = 1/16"
5. ANCHOR PLATE SIZE AND ANCHORAGE LOCAL ZONE REINFORCEMENT (AS NECESSARY) SHALL BE DETERMINED BY THE POST-TENSION SUPPLIER. ANCHOR PLATE SHALL BE GALVANIZED PER ASTM A123.
6. POST-TENSION BAR DUCT SHALL BE GALVANIZED RIGID STEEL PIPE OR CORRUGATED PLASTIC DUCT MEETING THE REQUIREMENTS OF THE SPECIAL PROVISIONS. DUCT SHALL BE 1 7/8" MIN. DIAMETER AND MEET THE REQUIREMENTS OF THE ANCHOR PLATE SIZE DETERMINED BY THE POST-TENSION SUPPLIER.
7. REINFORCING OTHER THAN ANCHORAGE GENERAL ZONE REINFORCING IS NOT SHOWN IN ELEVATION VIEW FOR CLARITY. REINFORCING NOT LABELED IN PLAN AND ELEVATION VIEWS FOR CLARITY.
8. EPOXY BONDING COMPOUND SHALL BE APPLIED TO MATCH-CAST JOINTS. EPOXY BONDING COMPOUND SHALL MEET THE REQUIREMENTS OF SECTION 719. PAYMENT FOR EPOXY BONDING COMPOUND WILL BE CONSIDERED INCIDENTAL TO THE ADJACENT PRECAST CONCRETE ITEM.
9. MATCH-CAST JOINTS SHALL INCLUDE A 3/4" MIN. DEPTH SHEAR KEY (UPWARD OR DOWNWARD FACING). JOINT DETAIL WITH SHEAR KEY SHALL BE SHOWN ON FABRICATION DRAWINGS.
10. ALL U-WALL TOP PIECES MAY BE INSTALLED AND TORQUED TO AN INITIAL TENSION OF 40 KSI IN THREADBARS PRIOR TO FINAL TENSIONING, GROUTING, WALL CAP CONSTRUCTION, OR BACKFILLING.
11. PRECAST U-WALL TOP AND BOTTOM PIECES SHALL HAVE A MINIMUM COMPRESSIVE STRENGTH OF 5 KSI PRIOR TO FINAL POST-TENSIONING.
12. SEE POST-TENSIONED U-WALL DETAILS (2 OF 2) FOR TENSIONING SEQUENCE.

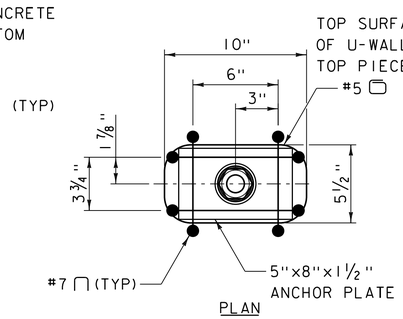

PLAN

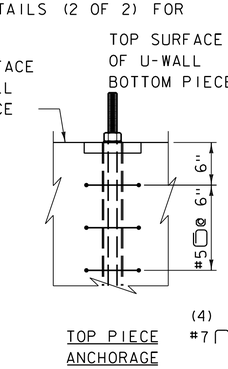

TOP PIECE ANCHORAGE ELEVATION

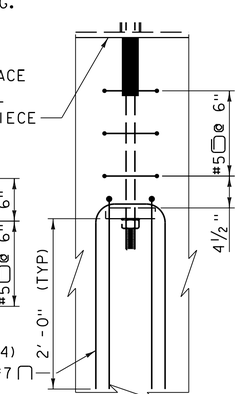

BOTTOM PIECE ANCHORAGE ELEVATION

ANCHORAGE REINFORCING DETAILS

NOT TO SCALE

PROJECT NAME: MIDDLEBURY	
PROJECT NUMBER: WCRS(23)	
FILE NAME: zl3g542sup.dgn	PLOT DATE: 4/30/2019
PROJECT LEADER: A.P. GUYETTE	DRAWN BY: R.H. BARNES
DESIGNED BY: R.H. BARNES	CHECKED BY: K.C. BARRY
POST-TENSIONED U-WALL DETAILS (1 OF 2)	SHEET 170 OF 328

VHB 57603

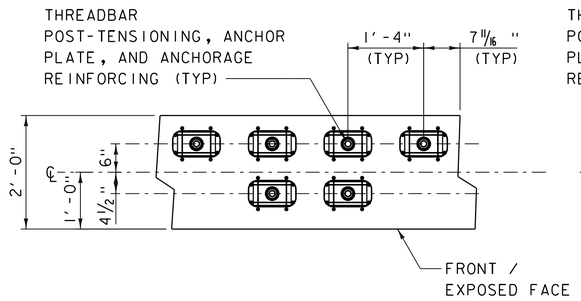

SWP 14 (PIECE FF) - PLAN

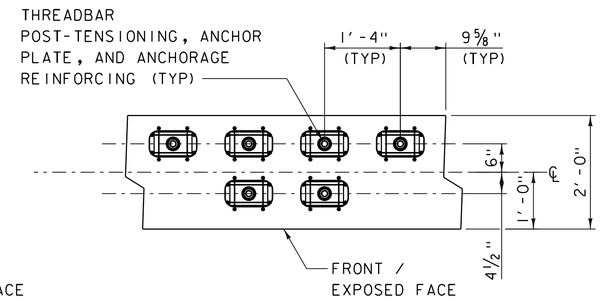

SWP 15 (PIECE GG) - PLAN

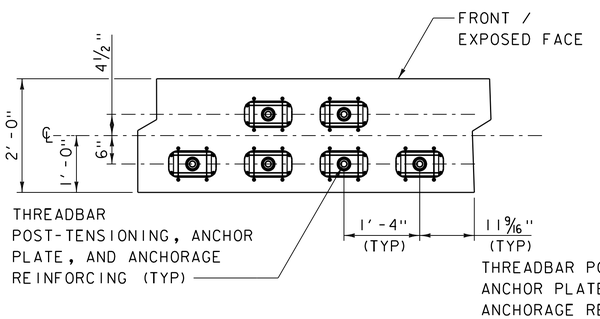

SWP 45 (PIECE PP) - PLAN

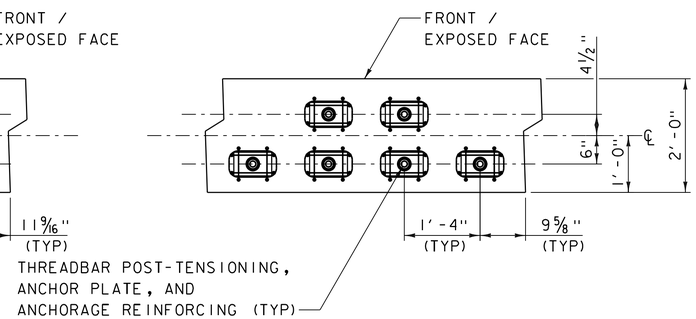

SWP 46 (PIECE QQ) - PLAN

SOUTH THICKENED U-WALL TRANSITION PIECE POST-TENSION LAYOUT

SCALE 3/4" = 1'-0"

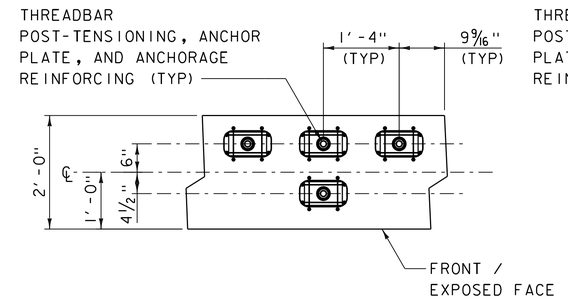

NWP 1 (PIECE AA) - PLAN

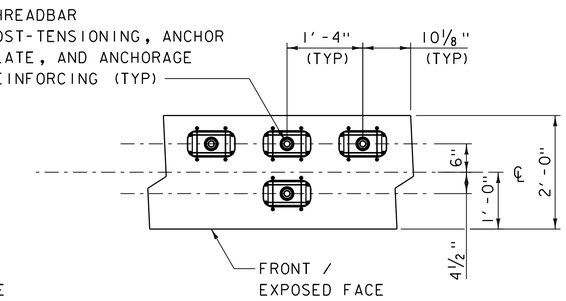

NWP 2 (PIECE BB) - PLAN

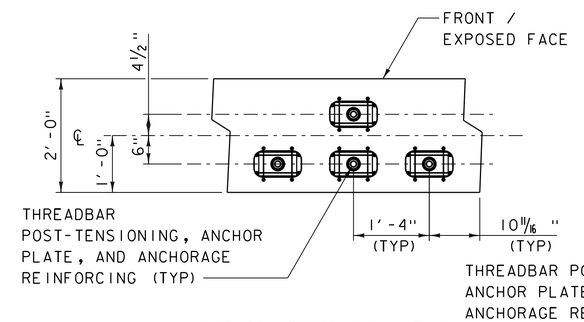

NWP 22 (PIECE II) - PLAN

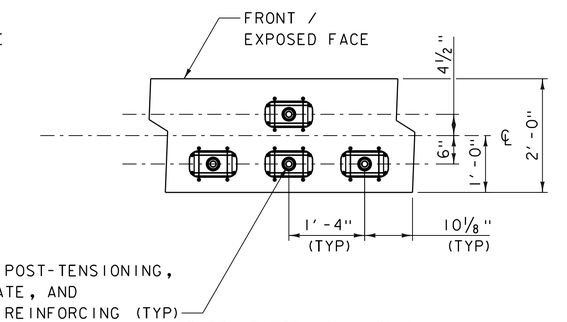

NWP 23 (PIECE JJ) - PLAN

NORTH THICKENED U-WALL TRANSITION PIECE POST-TENSION LAYOUT

SCALE 3/4" = 1'-0"

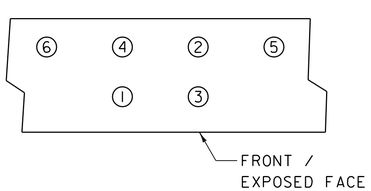

SOUTH THICKENED U-WALL TRANSITION PIECE

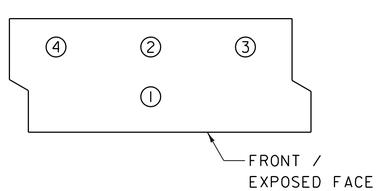

THICKENED U-WALL PIECE

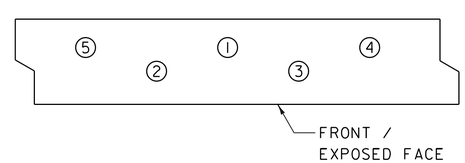

U-WALL PIECE

TENSIONING SEQUENCES

NOT TO SCALE

NOTE: ALL THREAD BARS IN EACH PIECE SHALL BE INSTALLED WITH ANCHOR PLATES AND NUTS PRIOR TO POST-TENSIONING THE FIRST BAR IN THE SEQUENCE.

NOTE: SEE POST-TENSIONED U-WALL DETAILS (1 OF 2) FOR ADDITIONAL DETAILS AND NOTES NOT SHOWN.

PROJECT NAME: MIDDLEBURY	
PROJECT NUMBER: WCRS(23)	
FILE NAME: zl3g542sup.dgn	PLOT DATE: 4/30/2019
PROJECT LEADER: A.P. GUYETTE	DRAWN BY: R.H. BARNES
DESIGNED BY: R.H. BARNES	CHECKED BY: K.C. BARRY
POST-TENSIONED U-WALL DETAILS (2 OF 2)	SHEET 171 OF 328

VHB 57603

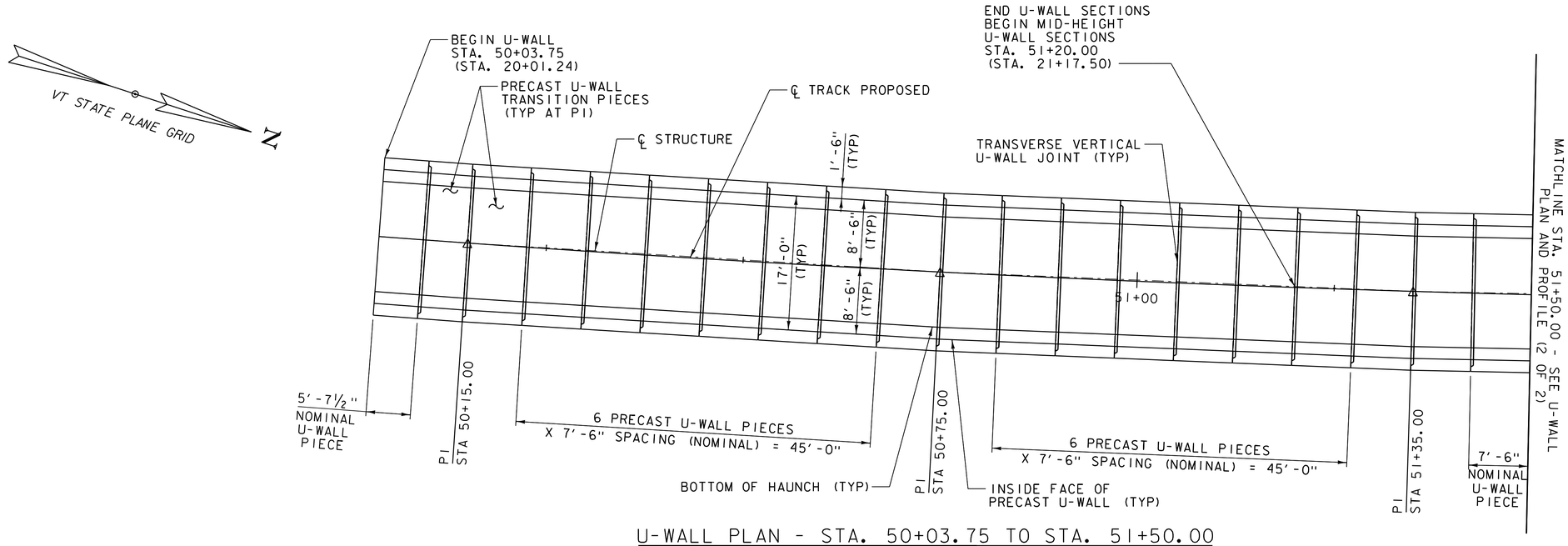

U-WALL PLAN - STA. 50+03.75 TO STA. 51+50.00

SCALE ⅛" = 1'-0"

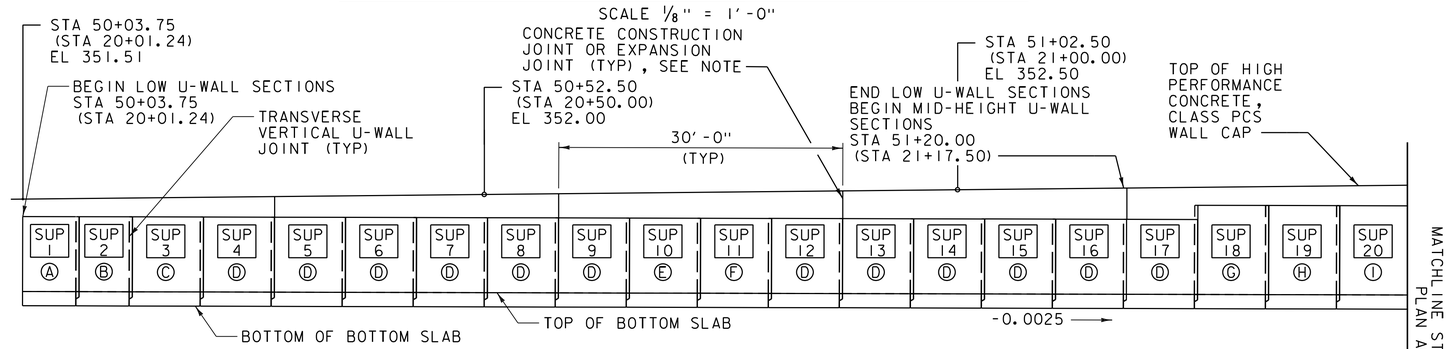

U-WALL PROFILE (LEFT) - STA. 50+03.75 TO STA. 51+50.00

SCALE ⅛" = 1'-0"

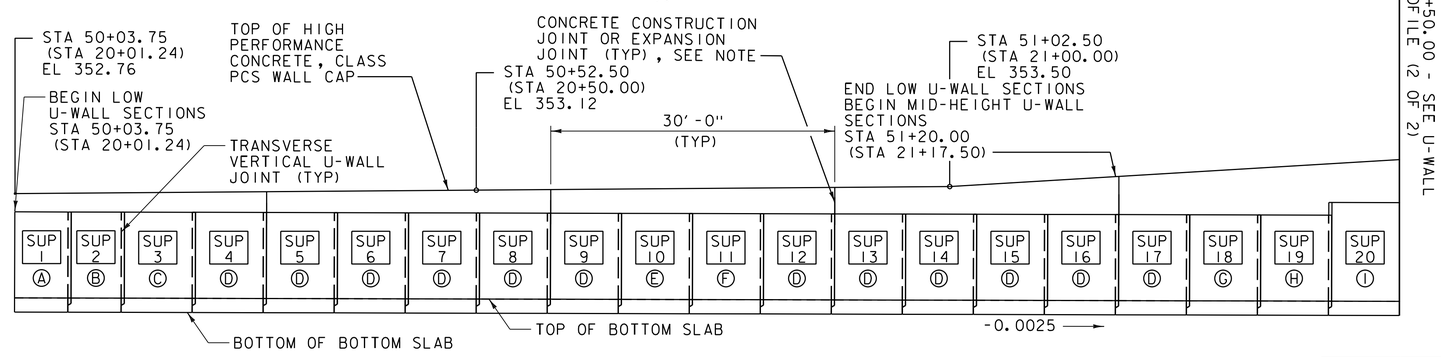

U-WALL PROFILE (RIGHT) - STA. 50+03.75 TO STA. 51+50.00

SCALE ⅛" = 1'-0"

NOTES:

1. EXPANSION JOINTS IN THE TOP WALL CAP SHALL BE SPACED AT 90'-0" INTERVALS (ALONG ℄ STRUCTURE), FROM BEGIN U-WALL. CONSTRUCTION JOINTS IN THE TOP WALL CAP SHALL BE SPACED AT 30'-0" INTERVALS (ALONG ℄ STRUCTURE) FROM BEGIN U-WALL AND OMITTED WHERE THERE IS AN EXPANSION JOINT.
2. STATIONING SHOWN IN PARENTHESES IS RAIL STATIONING.

LEGEND:

SUP ## = SOUTH U-WALL PIECE NUMBER

Ⓐ = UNIQUE U-WALL PIECE TYPE

vhb

PROJECT NAME: MIDDLEBURY	
PROJECT NUMBER: WCRS(23)	
FILE NAME: zl3g542suplanpro.dgn	PLOT DATE: 4/30/2019
PROJECT LEADER: A.P. GUYETTE	DRAWN BY: M.F. SUFFEL
DESIGNED BY: K.C. BARRY	CHECKED BY: R.H. BARNES
S. U-WALL PLAN AND PROFILE SHEET (1 OF 2)	SHEET 172 OF 328

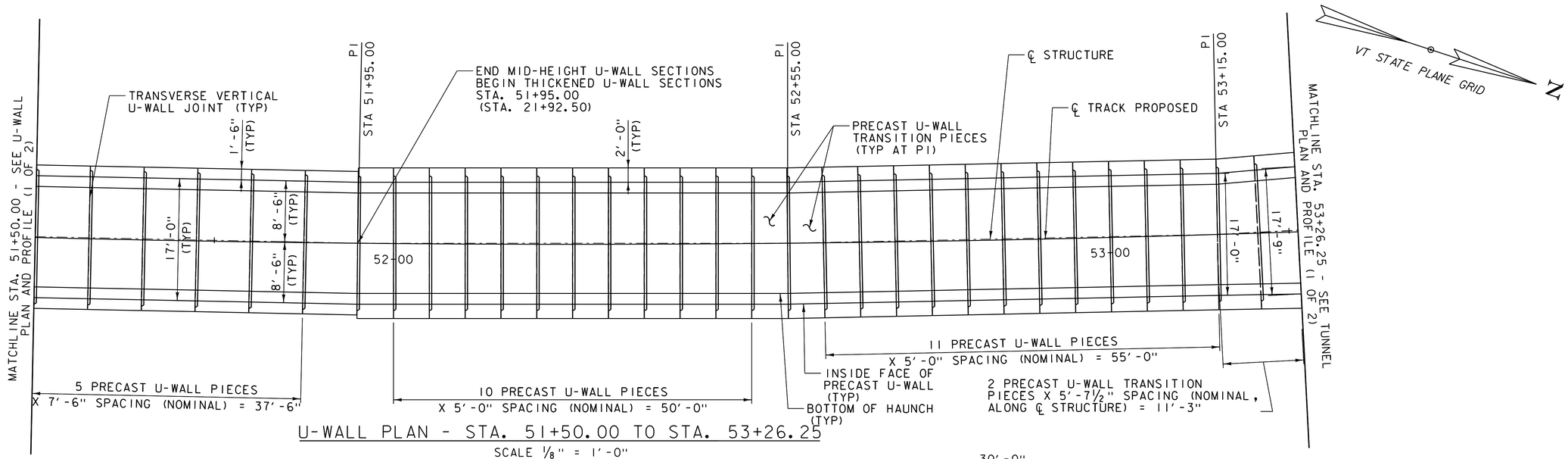

U-WALL PLAN - STA. 51+50.00 TO STA. 53+26.25

SCALE ⅛" = 1'-0"

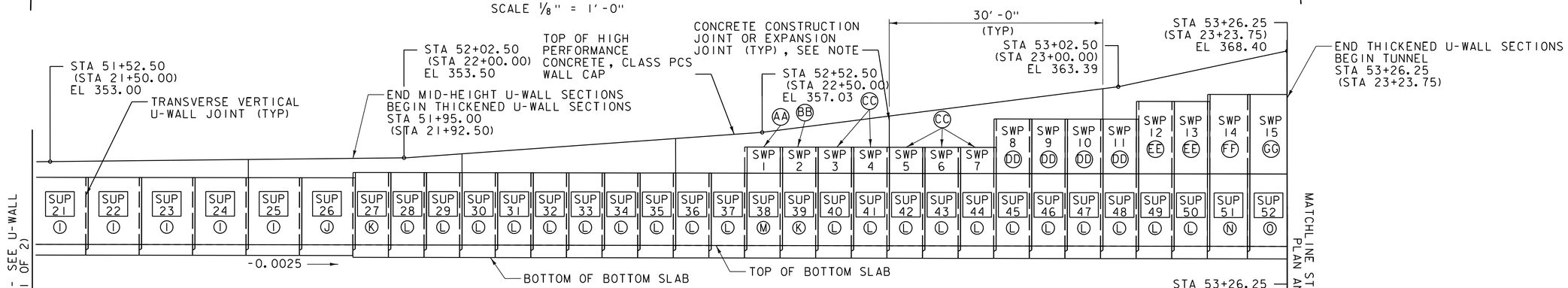

U-WALL PROFILE (LEFT) - STA. 51+50.00 TO STA. 53+26.25

SCALE ⅛" = 1'-0"

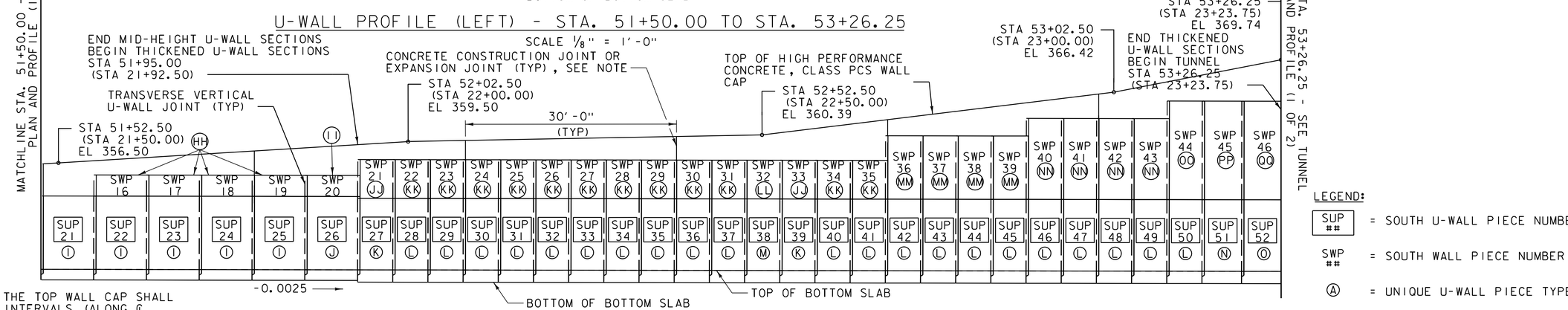

U-WALL PROFILE (RIGHT) - STA. 51+50.00 TO STA. 53+26.25

SCALE ⅛" = 1'-0"

LEGEND:

SUP ##	= SOUTH U-WALL PIECE NUMBER
SWP ##	= SOUTH WALL PIECE NUMBER
Ⓐ	= UNIQUE U-WALL PIECE TYPE

NOTES:

1. EXPANSION JOINTS IN THE TOP WALL CAP SHALL BE SPACED AT 90'-0" INTERVALS (ALONG ℄ STRUCTURE), FROM BEGIN U-WALL. CONSTRUCTION JOINTS IN THE TOP WALL CAP SHALL BE SPACED AT 30'-0" INTERVALS (ALONG ℄ STRUCTURE) FROM BEGIN U-WALL AND OMITTED WHERE THERE IS AN EXPANSION JOINT.
2. STATIONING SHOWN IN PARENTHESES IS RAIL STATIONING.

vhb

PROJECT NAME: MIDDLEBURY	
PROJECT NUMBER: WCRS(23)	
FILE NAME: zl3g542suplanpro.dgn	PLOT DATE: 4/30/2019
PROJECT LEADER: A.P. GUYETTE	DRAWN BY: M.F. SUFFEL
DESIGNED BY: K.C. BARRY	CHECKED BY: R.H. BARNES
S. U-WALL PLAN AND PROFILE SHEET (2 OF 2)	SHEET 173 OF 328

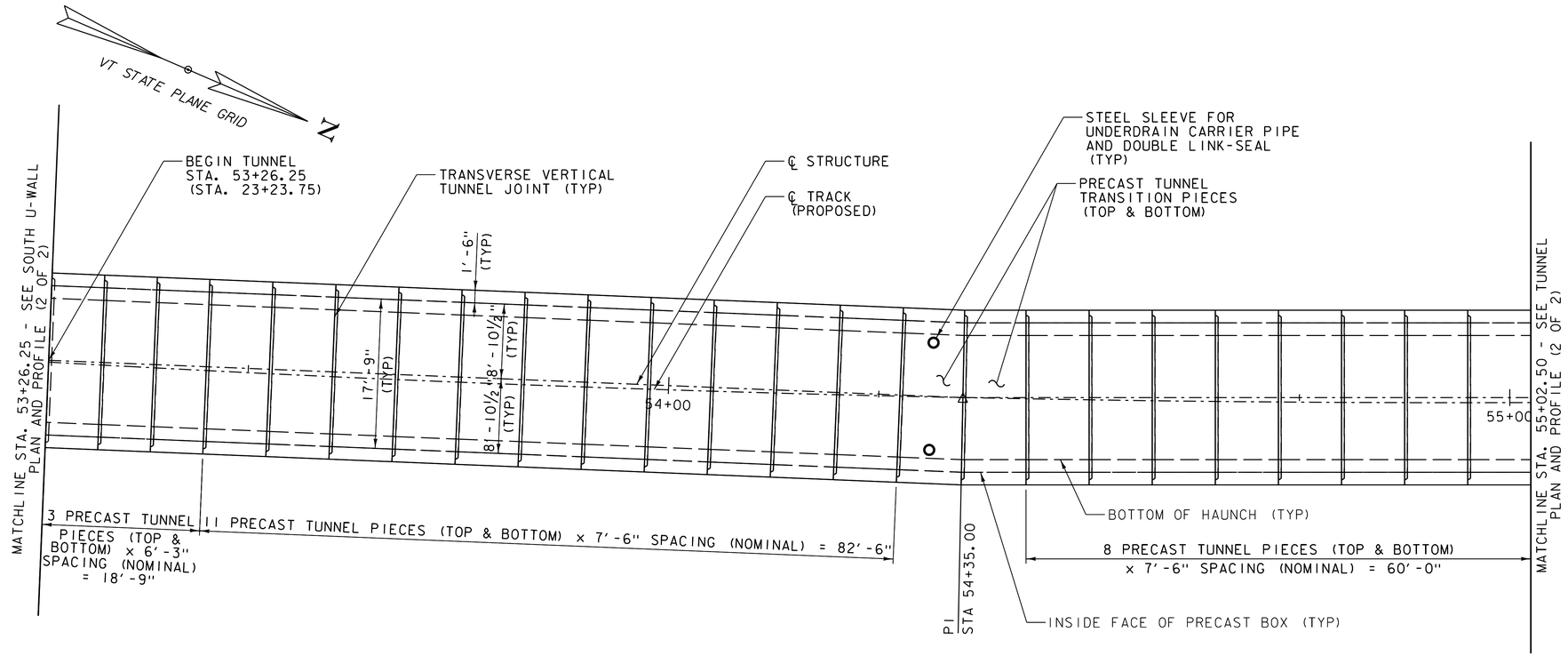

TUNNEL PLAN - STA. 53+26.25 TO STA. 55+02.50

SCALE ⅛" = 1'-0"

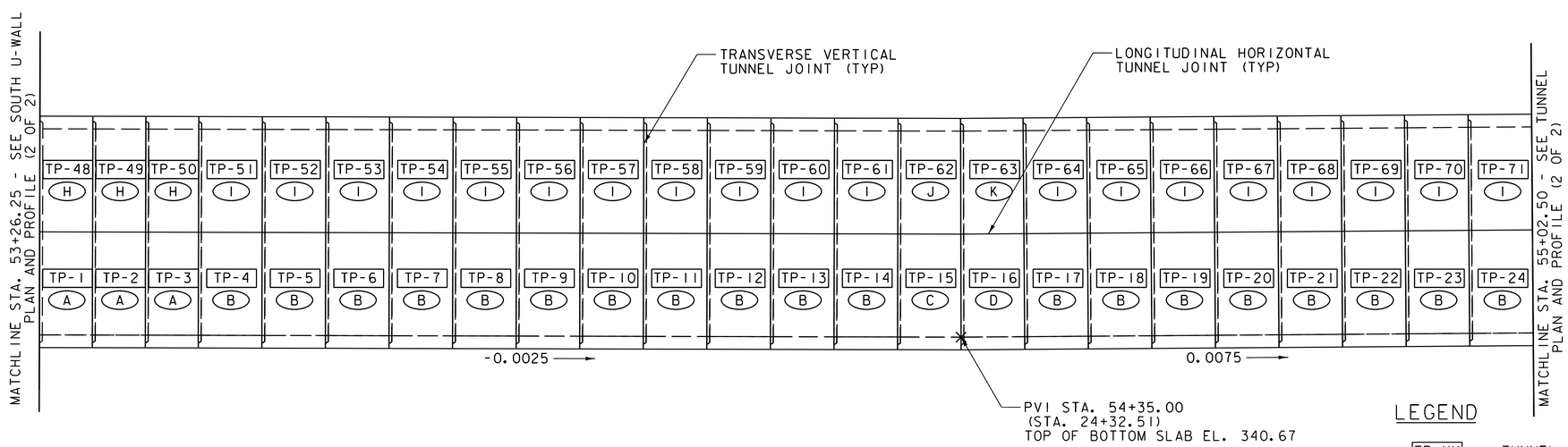

TUNNEL PROFILE - STA. 53+26.25 TO STA. 55+02.50

SCALE ⅛" = 1'-0"

NOTES

1. INTENDED INSTALLATION SEQUENCE:

   A. PLACE TP-15 & TP-16 FIRST

   B. PLACE TP-17 THROUGH TP-47, BEGINNING WITH TP-17 PROGRESSING NORTH, WHILE PLACING TP-1 THROUGH TP-14, BEGINNING WITH TP-14 AND PROGRESSING TO THE SOUTH. MINOR SLIDING OF PRECAST PIECE ALONG SUBBASE WILL BE REQUIRED FOR TP-17 THROUGH TP-47.

   C. PLACE TP-48 THROUGH TP-94, BEGINNING WITH TP-48 AND PROGRESSING NORTH.

2. TRACK ALIGNMENT IS SHOWN FOR REFERENCE ONLY.

3. REFER TO DRAINAGE AND UTILITY DETAILS FOR ADDITIONAL INFORMATION REGARDING THE STEEL SLEEVE FOR UNDERDRAIN CARRIER PIPE AND DOUBLE LINK-SEAL.

4. STATIONING SHOWN IN PARENTHESES IS RAIL STATIONING.

LEGEND

TP-XX = TUNNEL PIECE NUMBER

(A) = UNIQUE TUNNEL PIECE TYPE

PROJECT NAME: MIDDLEBURY	
PROJECT NUMBER: WCRS(23)	
FILE NAME: zl3g542tnlplanpro.dgn	PLOT DATE: 4/30/2019
PROJECT LEADER: A.P. GUYETTE	DRAWN BY: R.H.BARNES
DESIGNED BY: R.H. BARNES	CHECKED BY: K.C. BARRY
TUNNEL PLAN AND PROFILE SHEET (1 OF 2)	SHEET 174 OF 328

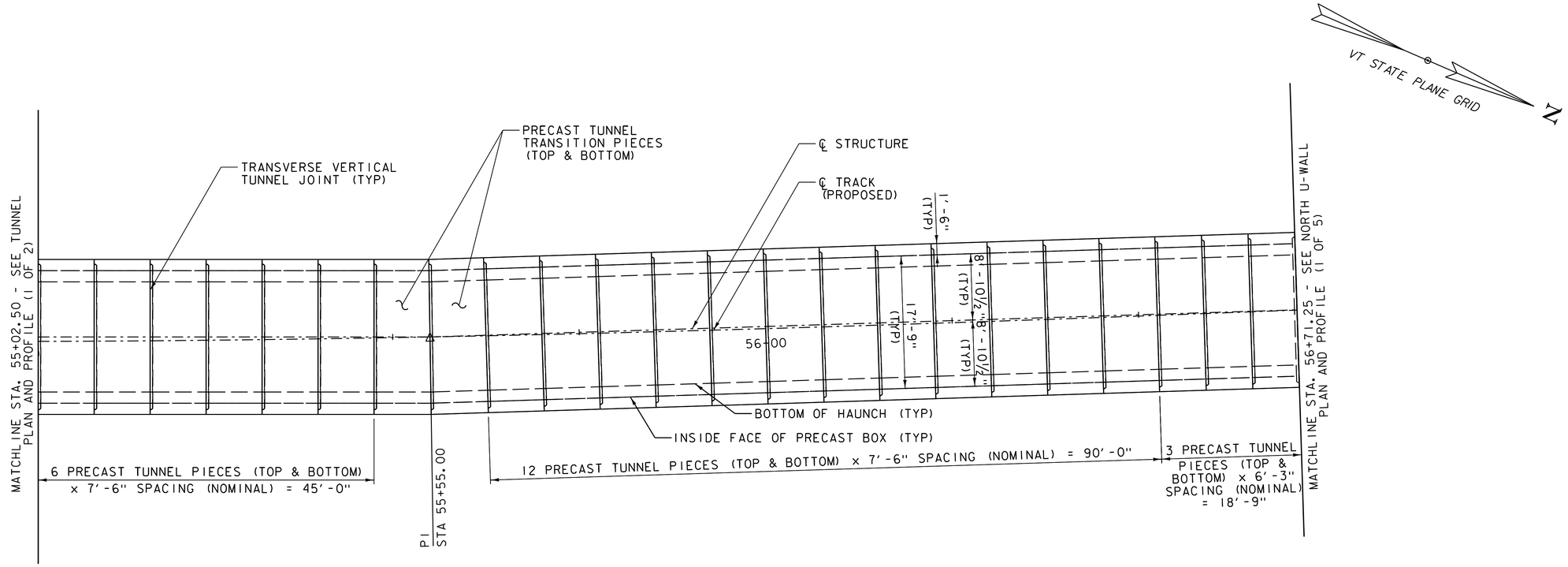

TUNNEL PLAN - STA. 55+02.50 TO STA. 56+71.25

SCALE 1/8" = 1'-0"

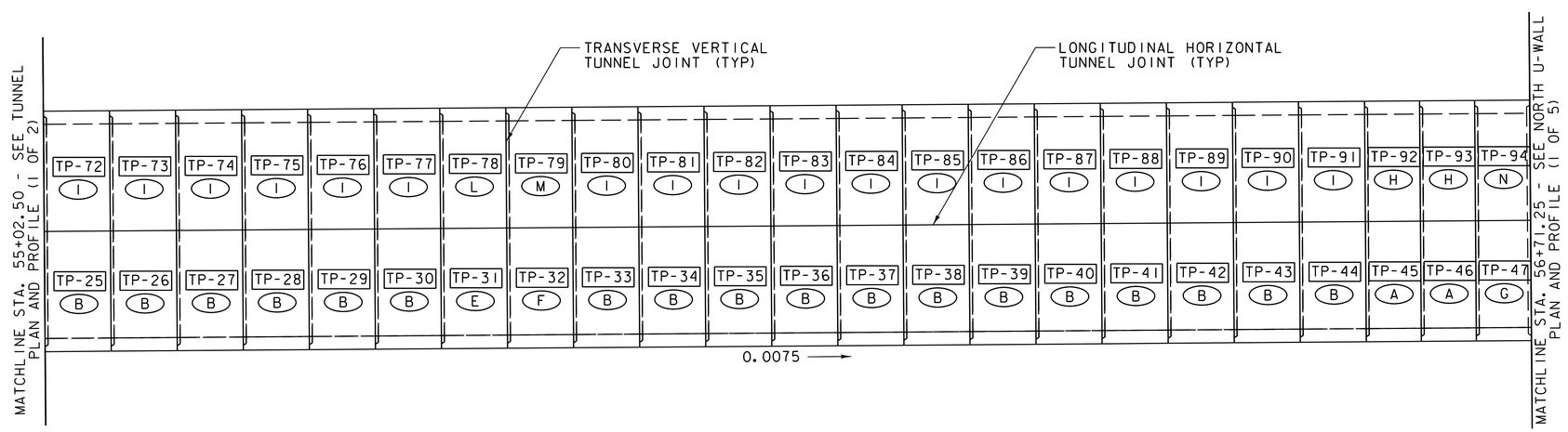

TUNNEL PROFILE - STA. 55+02.50 TO STA. 56+71.25

SCALE 1/8" = 1'-0"

NOTES

1. INTENDED INSTALLATION SEQUENCE:

   A. PLACE TP-15 & TP-16 FIRST

   B. PLACE TP-17 THROUGH TP-47, BEGINNING WITH TP-17 PROGRESSING NORTH, WHILE PLACING TP-1 THROUGH TP-14, BEGINNING WITH TP-14 AND PROGRESSING TO THE SOUTH. MINOR SLIDING OF PRECAST PIECE ALONG SUBBASE WILL BE REQUIRED FOR TP-17 THROUGH TP-47.

   C. PLACE TP-48 THROUGH TP-94, BEGINNING WITH TP-48 AND PROGRESSING NORTH.

2. TRACK ALIGNMENT IS SHOWN FOR REFERENCE ONLY.

LEGEND

TP-XX = TUNNEL PIECE NUMBER

(A) = UNIQUE TUNNEL PIECE TYPE

PROJECT NAME: MIDDLEBURY	
PROJECT NUMBER: WCRS(23)	
FILE NAME: zl3g542tnlplanpro.dgn	PLOT DATE: 4/30/2019
PROJECT LEADER: A.P. GUYETTE	DRAWN BY: R.H.BARNES
DESIGNED BY: R.H. BARNES	CHECKED BY: K.C. BARRY
TUNNEL PLAN AND PROFILE SHEET (2 OF 2)	SHEET 175 OF 328

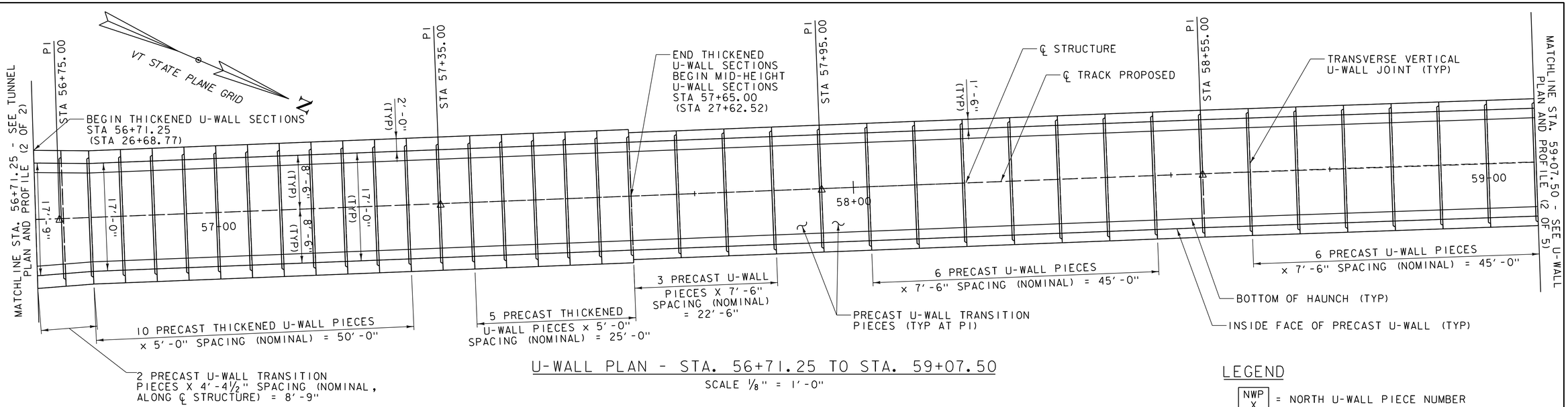

U-WALL PLAN - STA. 56+71.25 TO STA. 59+07.50

SCALE ⅛" = 1'-0"

LEGEND

NWP X = NORTH U-WALL PIECE NUMBER

(X) = UNIQUE NORTH U-WALL PIECE TYPE

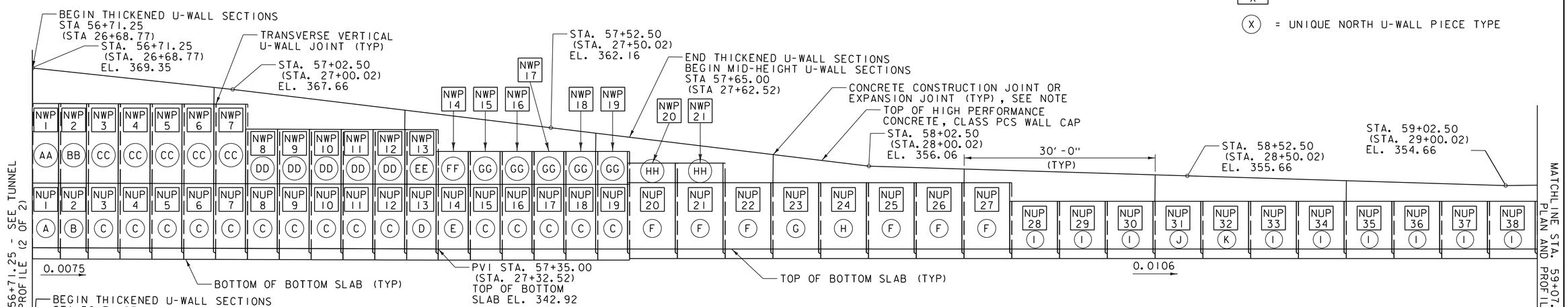

U-WALL PROFILE (LEFT) - STA. 56+71.25 TO STA. 59+07.50

SCALE ⅛" = 1'-0"

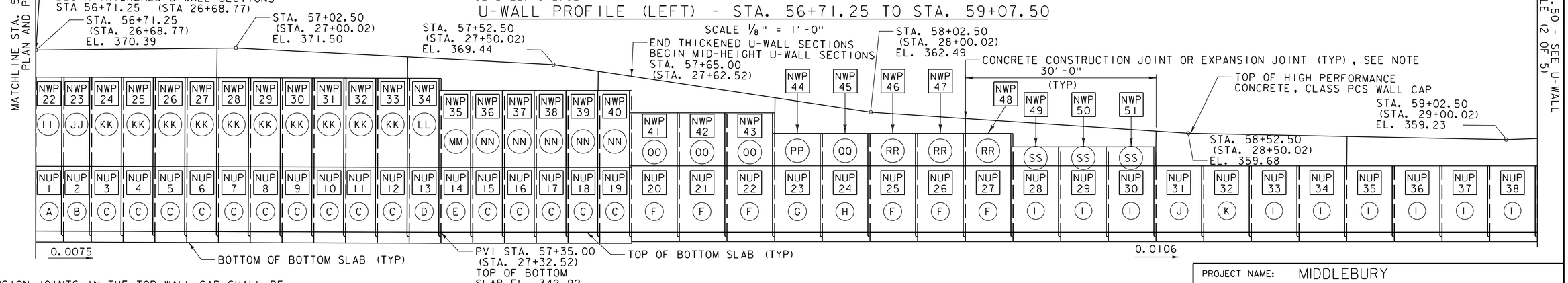

U-WALL PROFILE (RIGHT) - STA. 56+71.25 TO STA. 59+07.50

SCALE ⅛" = 1'-0"

NOTES:

1. EXPANSION JOINTS IN THE TOP WALL CAP SHALL BE SPACED AT 90'-0" INTERVALS (ALONG ℄ STRUCTURE), FROM BEGIN U-WALL. CONSTRUCTION JOINTS IN THE TOP WALL CAP SHALL BE SPACED AT 30'-0" INTERVALS (ALONG ℄ STRUCTURE) FROM BEGIN U-WALL AND OMITTED WHERE THERE IS AN EXPANSION JOINT.
2. STATIONING SHOWN IN PARENTHESES IS RAIL STATIONING.

vhb

PROJECT NAME: MIDDLEBURY	
PROJECT NUMBER: WCRS(23)	
FILE NAME: zl3g542nupplanpro.dgn	PLOT DATE: 4/30/2019
PROJECT LEADER: A.P. GUYETTE	DRAWN BY: K.C. BARRY
DESIGNED BY: K.C. BARRY	CHECKED BY: R.H. BARNES
N. U-WALL PLAN AND PROFILE SHEET (1 OF 5)	SHEET 176 OF 328

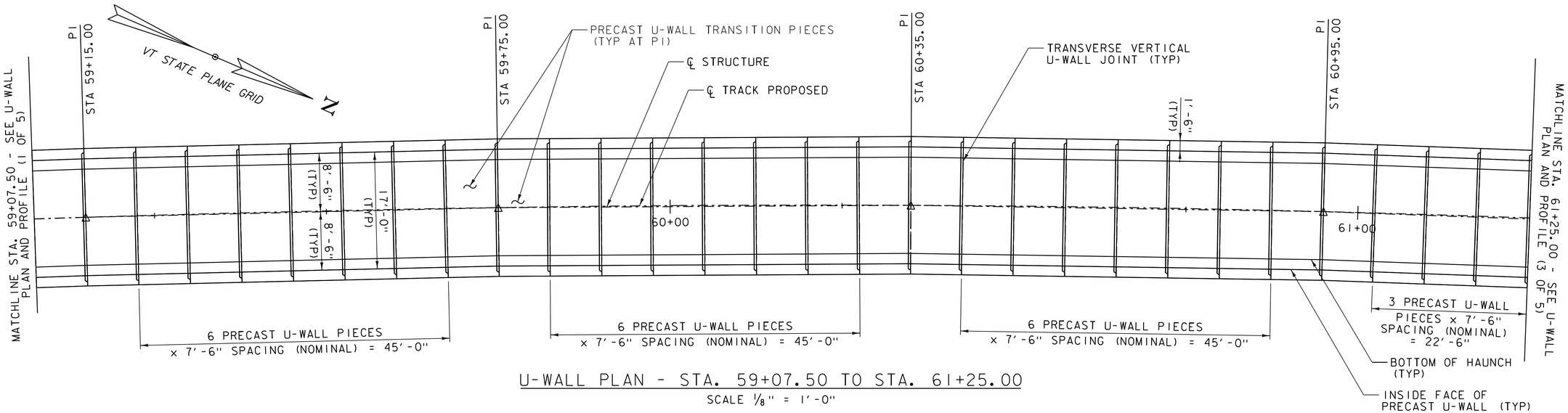

U-WALL PLAN - STA. 59+07.50 TO STA. 61+25.00

SCALE 1/8" = 1'-0"

LEGEND

NWP X = NORTH U-WALL PIECE NUMBER

(X) = UNIQUE NORTH U-WALL PIECE TYPE

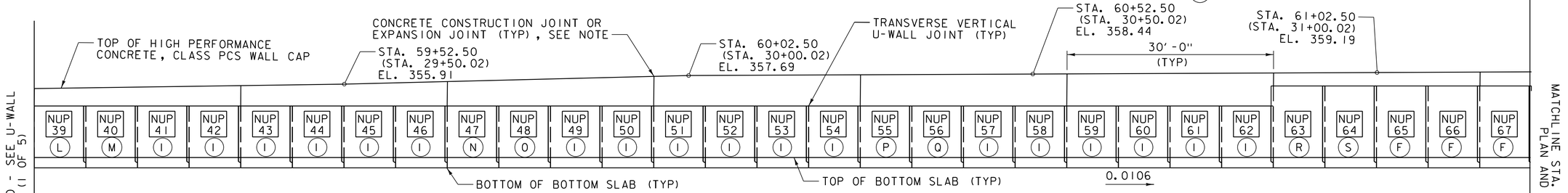

U-WALL PROFILE (LEFT) - STA. 59+07.50 TO STA. 61+25.00

SCALE 1/8" = 1'-0"

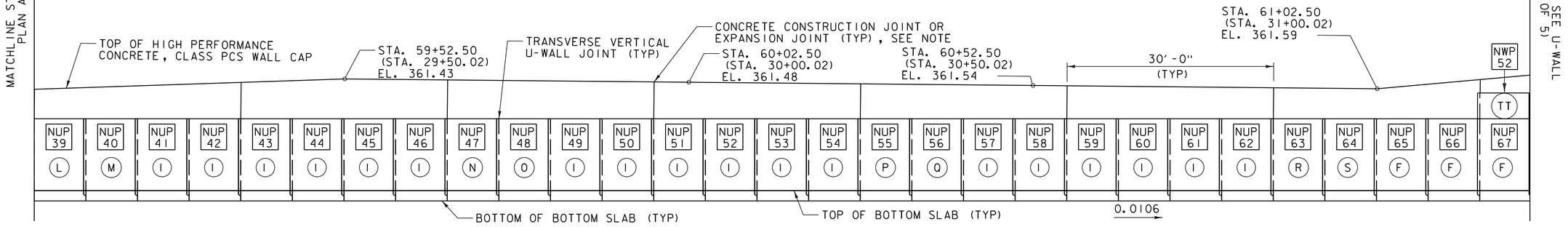

U-WALL PROFILE (RIGHT) - STA. 59+07.50 TO STA. 61+25.00

SCALE 1/8" = 1'-0"

NOTES:

1. EXPANSION JOINTS IN THE TOP WALL CAP SHALL BE SPACED AT 90'-0" INTERVALS (ALONG ℄ STRUCTURE), FROM BEGIN U-WALL. CONSTRUCTION JOINTS IN THE TOP WALL CAP SHALL BE SPACED AT 30'-0" INTERVALS (ALONG ℄ STRUCTURE) FROM BEGIN U-WALL AND OMITTED WHERE THERE IS AN EXPANSION JOINT.
2. STATIONING SHOWN IN PARENTHESES IS RAIL STATIONING.

vhb

PROJECT NAME: MIDDLEBURY	
PROJECT NUMBER: WCRS(23)	
FILE NAME: z13g542nupplanpro.dgn	PLOT DATE: 4/30/2019
PROJECT LEADER: A.P. GUYETTE	DRAWN BY: K.C. BARRY
DESIGNED BY: K.C. BARRY	CHECKED BY: R.H. BARNES
N. U-WALL PLAN AND PROFILE SHEET (2 OF 5)	SHEET 177 OF 328

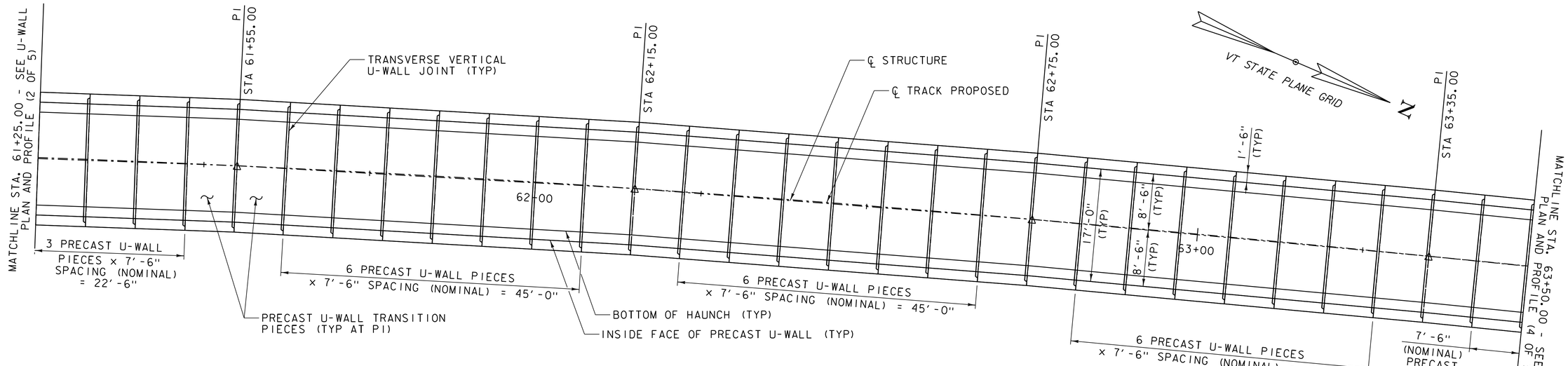

U-WALL PLAN - STA. 61+25.00 TO STA. 63+50.00

SCALE 1/8" = 1'-0"

LEGEND

NWP X = NORTH U-WALL PIECE NUMBER

(X) = UNIQUE NORTH U-WALL PIECE TYPE

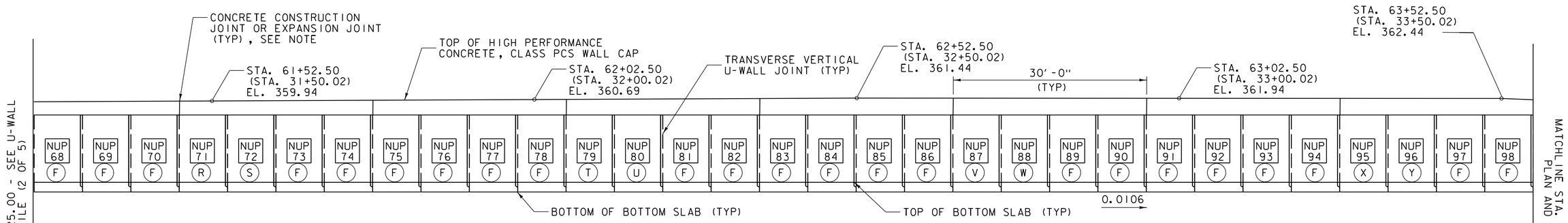

U-WALL PROFILE (LEFT) - STA. 61+25.00 TO STA. 63+50.00

SCALE 1/8" = 1'-0"

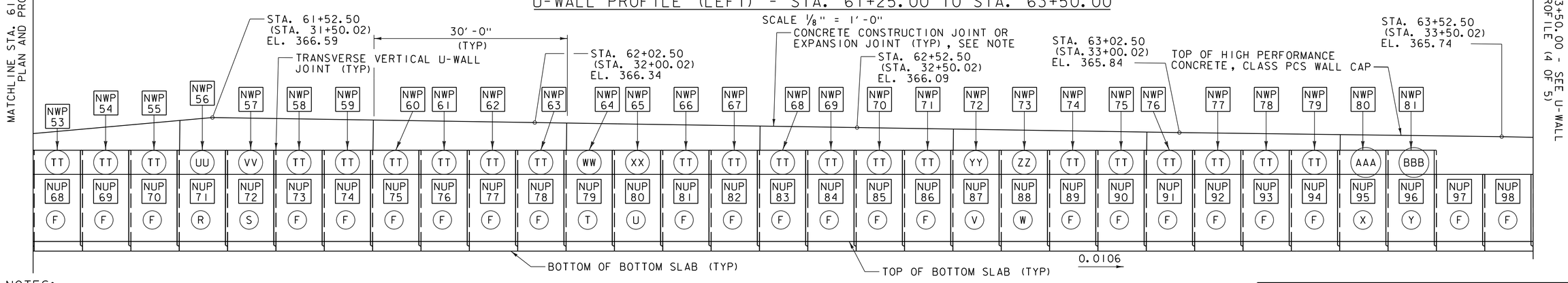

U-WALL PROFILE (RIGHT) - STA. 61+25.00 TO STA. 63+50.00

SCALE 1/8" = 1'-0"

NOTES:

1. EXPANSION JOINTS IN THE TOP WALL CAP SHALL BE SPACED AT 90'-0" INTERVALS (ALONG ℄ STRUCTURE), FROM BEGIN U-WALL. CONSTRUCTION JOINTS IN THE TOP WALL CAP SHALL BE SPACED AT 30'-0" INTERVALS (ALONG ℄ STRUCTURE) FROM BEGIN U-WALL AND OMITTED WHERE THERE IS AN EXPANSION JOINT.
2. STATIONING SHOWN IN PARENTHESES IS RAIL STATIONING.

vhb

PROJECT NAME: MIDDLEBURY	
PROJECT NUMBER: WCRS(23)	
FILE NAME: zl3g542nupplanpro.dgn	PLOT DATE: 4/30/2019
PROJECT LEADER: A.P. GUYETTE	DRAWN BY: K.C. BARRY
DESIGNED BY: K.C. BARRY	CHECKED BY: R.H. BARNES
N. U-WALL PLAN AND PROFILE SHEET (3 OF 5)	SHEET 178 OF 328

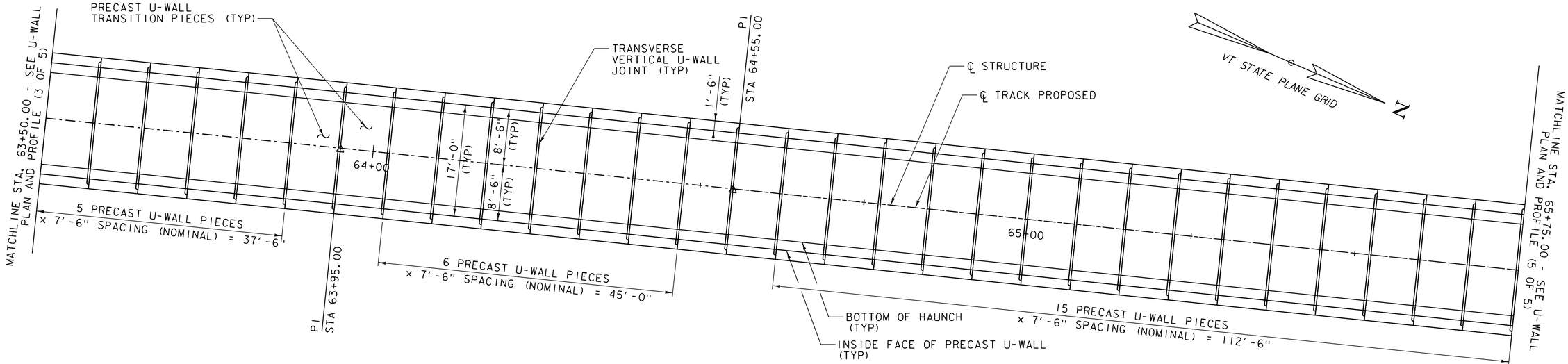

U-WALL PLAN - STA. 63+50.00 TO STA. 65+75.00

SCALE 1/8" = 1'-0"

LEGEND

NWP X = NORTH U-WALL PIECE NUMBER

(X) = UNIQUE NORTH U-WALL PIECE TYPE

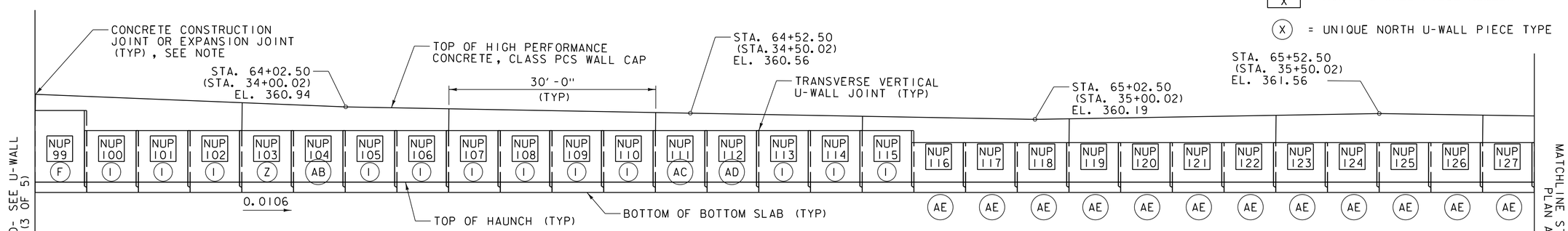

U-WALL PROFILE (LEFT) - STA. 63+50.00 TO STA. 65+75.00

SCALE 1/8" = 1'-0"

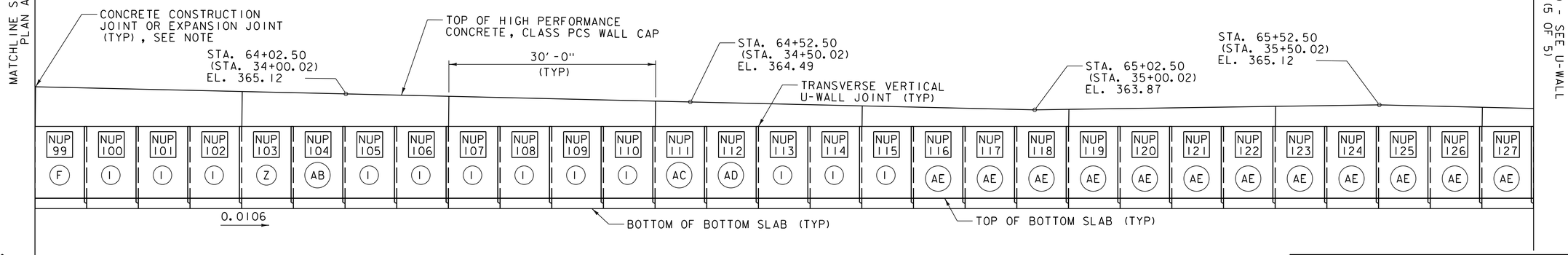

U-WALL PROFILE (RIGHT) - STA. 63+50.00 TO STA. 65+75.00

SCALE 1/8" = 1'-0"

NOTES:

1. EXPANSION JOINTS IN THE TOP WALL CAP SHALL BE SPACED AT 90'-0" INTERVALS (ALONG ℄ STRUCTURE), FROM BEGIN U-WALL. CONSTRUCTION JOINTS IN THE TOP WALL CAP SHALL BE SPACED AT 30'-0" INTERVALS (ALONG ℄ STRUCTURE) FROM BEGIN U-WALL AND OMITTED WHERE THERE IS AN EXPANSION JOINT.
2. STATIONING SHOWN IN PARENTHESES IS RAIL STATIONING.

PROJECT NAME: MIDDLEBURY	
PROJECT NUMBER: WCRS(23)	
FILE NAME: zl3g542nupplanpro.dgn	PLOT DATE: 4/30/2019
PROJECT LEADER: A.P. GUYETTE	DRAWN BY: K.C. BARRY
DESIGNED BY: K.C. BARRY	CHECKED BY: R.H. BARNES
N. U-WALL PLAN AND PROFILE SHEET (4 OF 5)	SHEET 179 OF 328

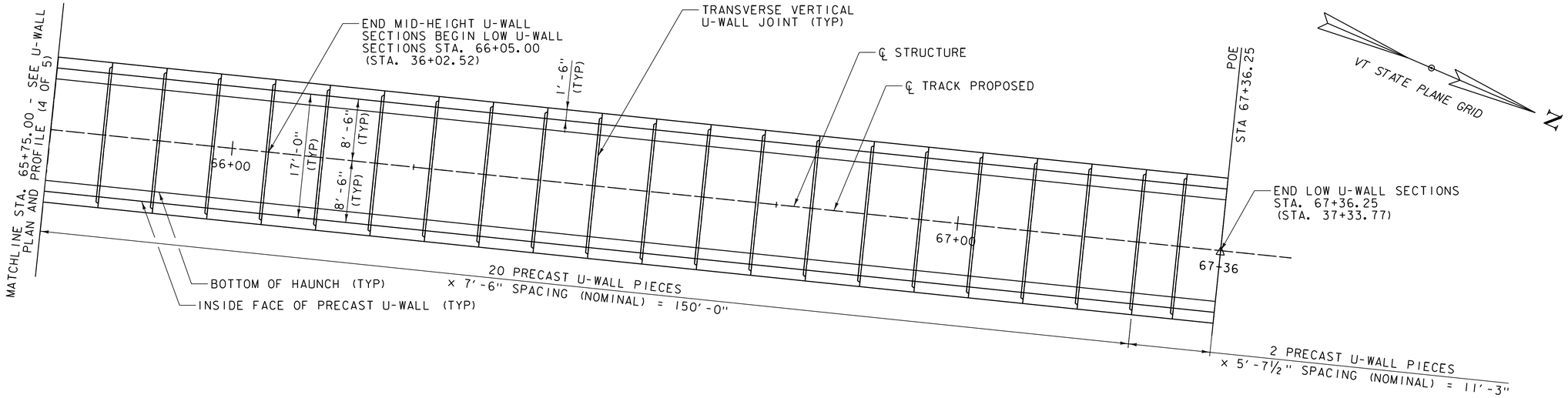

U-WALL PLAN - STA. 65+75.00 TO STA. 67+36.25

SCALE ⅛" = 1'-0"

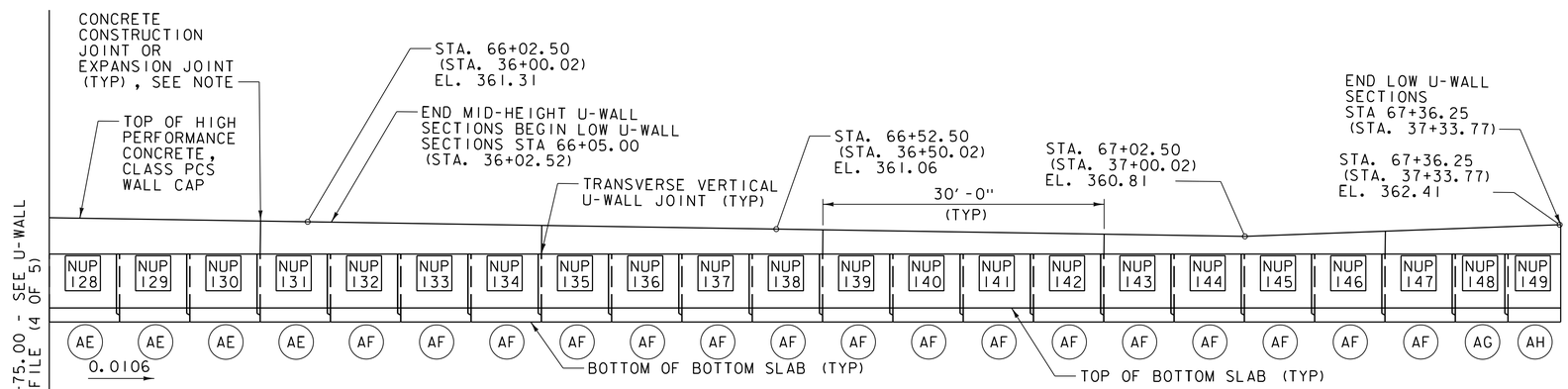

U-WALL PROFILE (LEFT) - STA. 65+75.00 TO STA. 67+36.25

SCALE ⅛" = 1'-0"

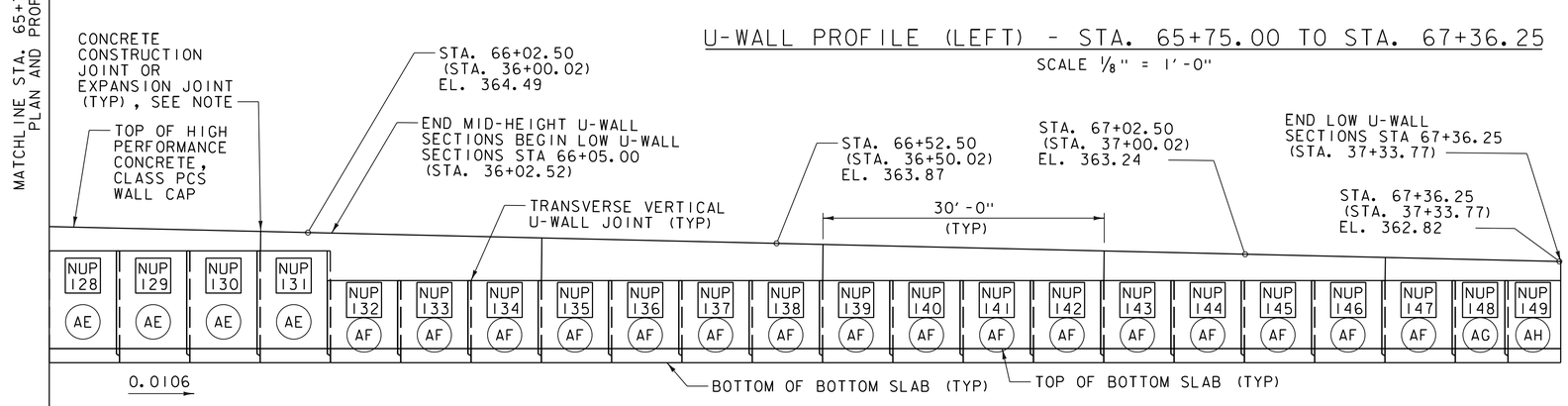

U-WALL PROFILE (RIGHT) - STA. 65+75.00 TO STA. 67+36.25

SCALE ⅛" = 1'-0"

LEGEND

NWP X = NORTH U-WALL PIECE NUMBER

(X) = UNIQUE NORTH U-WALL PIECE TYPE

NOTES:

1. EXPANSION JOINTS IN THE TOP WALL CAP SHALL BE SPACED AT 90'-0" INTERVALS (ALONG ℄ STRUCTURE), FROM BEGIN U-WALL. CONSTRUCTION JOINTS IN THE TOP WALL CAP SHALL BE SPACED AT 30'-0" INTERVALS (ALONG ℄ STRUCTURE) FROM BEGIN U-WALL AND OMITTED WHERE THERE IS AN EXPANSION JOINT.
2. STATIONING SHOWN IN PARENTHESES IS RAIL STATIONING.

vhb

PROJECT NAME: MIDDLEBURY	
PROJECT NUMBER: WCRS(23)	
FILE NAME: zl3g542nupplanpro.dgn	PLOT DATE: 4/30/2019
PROJECT LEADER: A.P. GUYETTE	DRAWN BY: K.C. BARRY
DESIGNED BY: K.C. BARRY	CHECKED BY: R.H. BARNES
N. U-WALL PLAN AND PROFILE SHEET (5 OF 5)	SHEET 180 OF 328

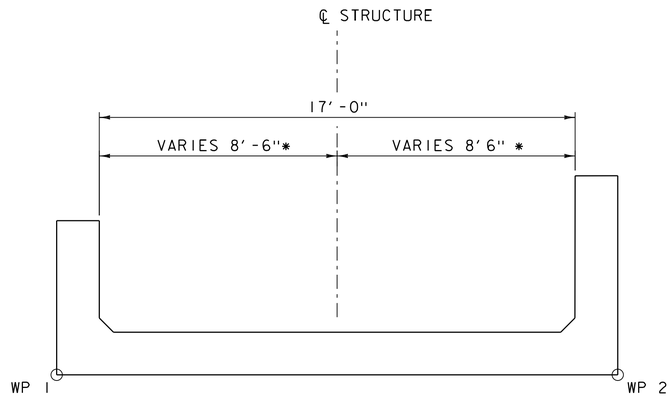

* DIMENSION VARIES AT PI'S

SOUTH U-WALL PIECE LAYOUT - SECTION

SCALE 3/8" = 1'-0"

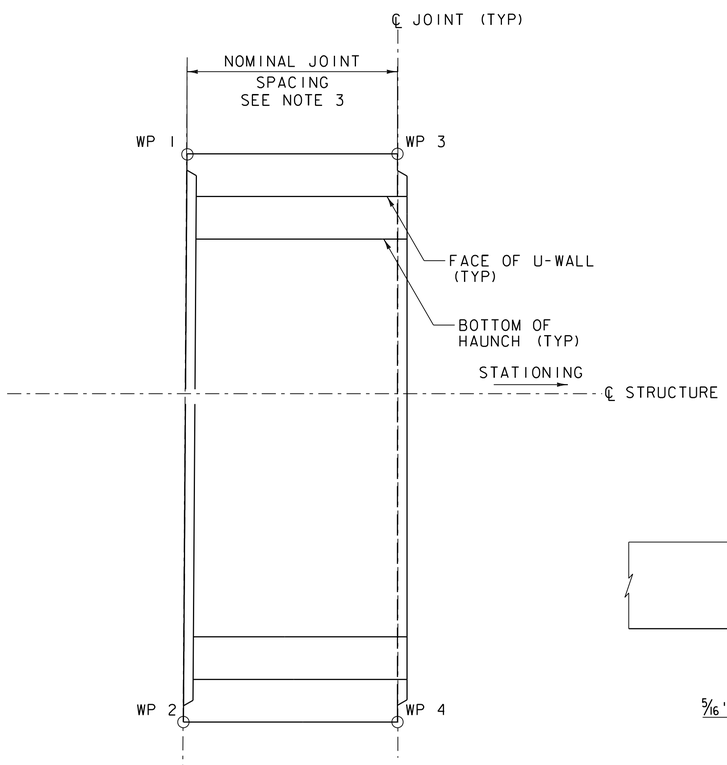

SOUTH U-WALL PIECE LAYOUT - PLAN

SCALE 3/8" = 1'-0"

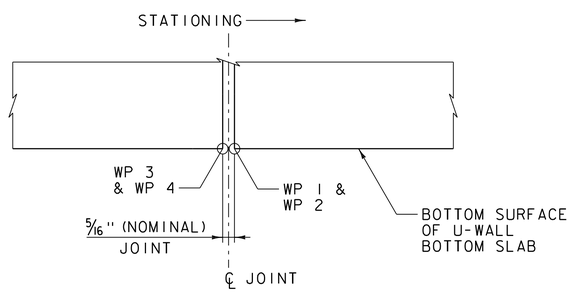

JOINT DETAIL FOR LAYOUT

NOT TO SCALE

NOTES

1. THE CONTRACTOR SHALL DEVELOP A TABLE OF NORTHINGS, EASTINGS, AND ELEVATIONS THAT CORRESPOND TO THE WORKING POINTS FOR EACH PRECAST U-WALL PIECE IN ACCORDANCE WITH THE DETAILS ON THIS DRAWING. THIS TABLE SHALL BE USED FOR LAYOUT PURPOSES.
2. WORKING POINTS ARE TAKEN AT THE CORNER OF PRECAST CONCRETE PIECE.
3. NOMINAL JOINT SPACING VARIES. SEE SOUTH U-WALL PIECE DETAIL SHEETS.

PROJECT NAME: MIDDLEBURY	
PROJECT NUMBER: WCRS(23)	
FILE NAME: zl3g542suplayout.dgn	PLOT DATE: 4/30/2019
PROJECT LEADER: A.P. GUYETTE	DRAWN BY: M.F. SUFFEL
DESIGNED BY: R.H. BARNES	CHECKED BY: R.H. BARNES
SOUTH U-WALL PIECE LAYOUT	SHEET 181 OF 328

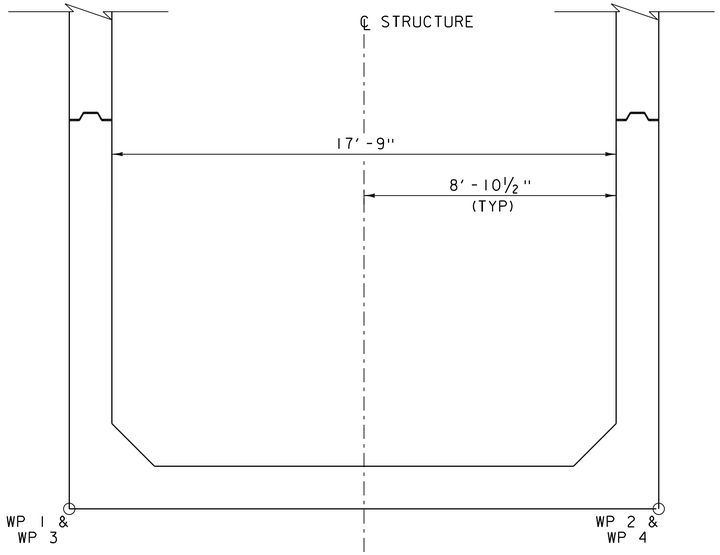

TUNNEL BOTTOM PIECE LAYOUT - SECTION

SCALE ⅜" = 1'-0"

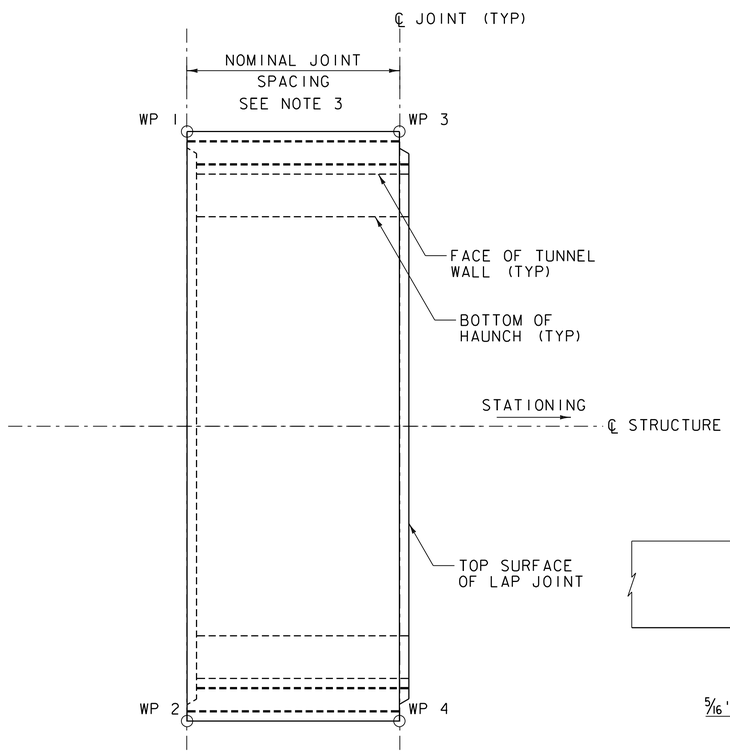

TUNNEL BOTTOM PIECE LAYOUT - PLAN

SCALE ⅜" = 1'-0"

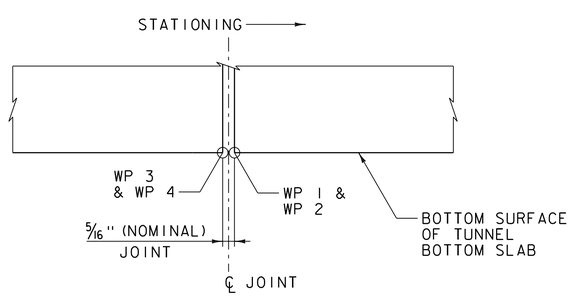

JOINT DETAIL FOR LAYOUT

NOT TO SCALE

NOTES

1. THE CONTRACTOR SHALL DEVELOP A TABLE OF NORTHINGS, EASTINGS, AND ELEVATIONS THAT CORRESPOND TO THE WORKING POINTS FOR EACH PRECAST TUNNEL BOTTOM PIECE IN ACCORDANCE WITH THE DETAILS ON THIS DRAWING. THIS TABLE SHALL BE USED FOR LAYOUT PURPOSES.
2. WORKING POINTS ARE TAKEN AT THE CORNER OF PRECAST CONCRETE PIECE.
3. NOMINAL JOINT SPACING VARIES. SEE TUNNEL PIECE DETAIL SHEETS.

PROJECT NAME: MIDDLEBURY	
PROJECT NUMBER: WCRS(23)	
FILE NAME: zl3g542tnllayout.dgn	PLOT DATE: 4/30/2019
PROJECT LEADER: A.P. GUYETTE	DRAWN BY: R.H.BARNES
DESIGNED BY: R.H. BARNES	CHECKED BY: K.C. BARRY
TUNNEL PIECE LAYOUT	SHEET 182 OF 328

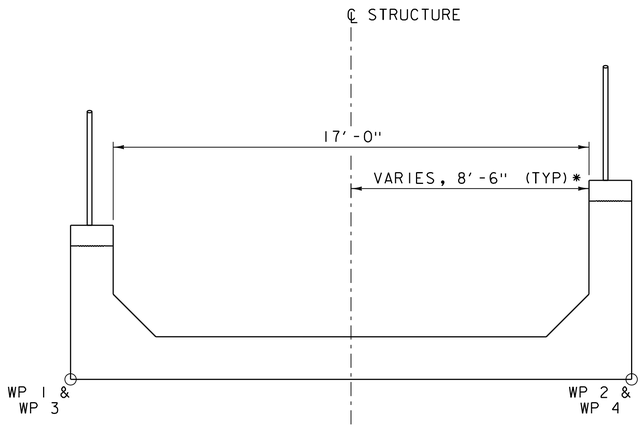

* DIMENSION VARIES AT PI'S

NORTH U-WALL PIECE LAYOUT - SECTION

SCALE 3/8" = 1'-0"

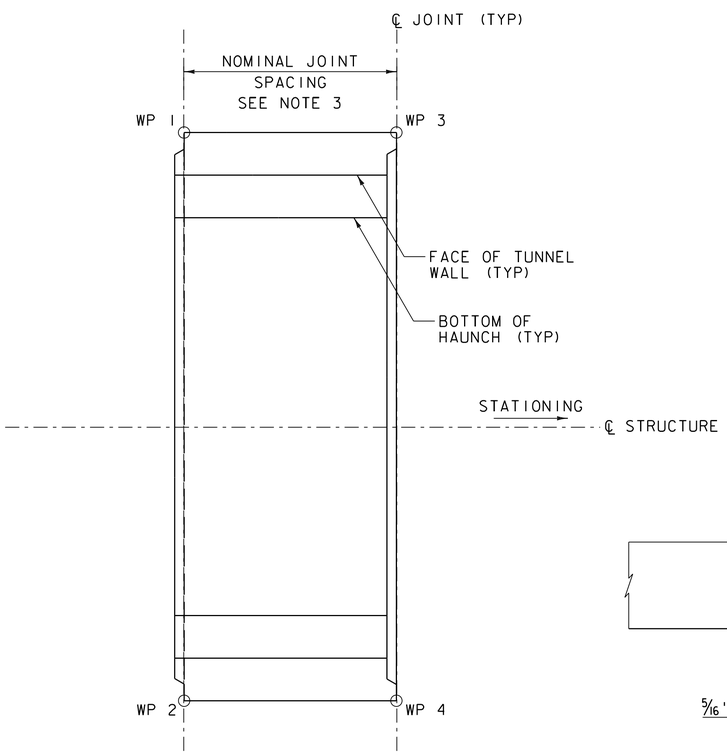

U-WALL BOTTOM PIECE LAYOUT - PLAN

SCALE 3/8" = 1'-0"

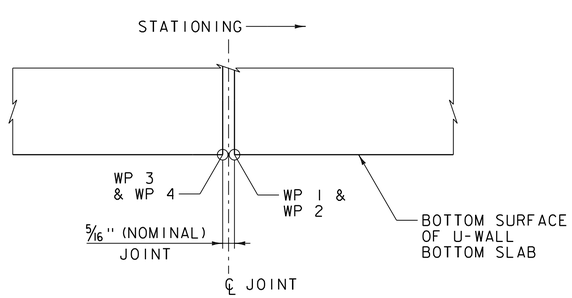

JOINT DETAIL FOR LAYOUT

NOT TO SCALE

NOTES

1. THE CONTRACTOR SHALL DEVELOP A TABLE OF NORTHINGS, EASTINGS, AND ELEVATIONS THAT CORRESPOND TO THE WORKING POINTS FOR EACH PRECAST U-WALL PIECE IN ACCORDANCE WITH THE DETAILS ON THIS DRAWING. THIS TABLE SHALL BE USED FOR LAYOUT PURPOSES.
2. WORKING POINTS ARE TAKEN AT THE CORNER OF PRECAST CONCRETE PIECE.
3. NOMINAL JOINT SPACING VARIES. SEE NORTH U-WALL PEICE DETAILS SHEETS.

PROJECT NAME: MIDDLEBURY	
PROJECT NUMBER: WCRS(23)	
FILE NAME: zl3g542nuplayout.dgn	PLOT DATE: 4/30/2019
PROJECT LEADER: A.P. GUYETTE	DRAWN BY: K.C. BARRY
DESIGNED BY: K.C. BARRY	CHECKED BY: M.F. SUFFEL
NORTH U-WALL PIECE LAYOUT	SHEET 183 OF 328

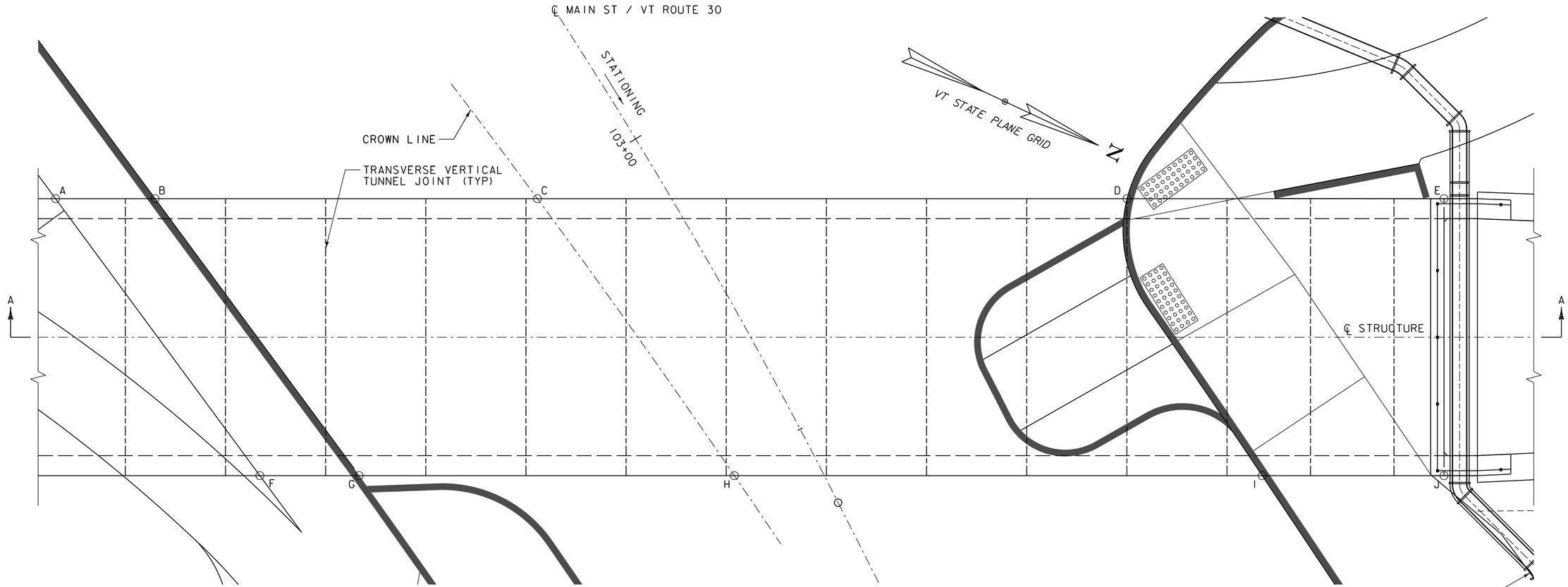

MAIN STREET TUNNEL SLAB - PLAN

SCALE 1/4" = 1'-0"

12" DIA. WATERLINE

TUNNEL SLAB ELEVATIONS

POINT	STATION	OFFSET	TOP OF CONCRETE EL.
A	102+79.21	38.95' RT	367.69
B	102+83.79	32.77' RT	367.85
C	103+00.00	8.61' RT	368.94
D	103+21.38	29.72' LT	368.95
E	103+31.38	50.77' LT	368.81
F	103+07.63	37.09' RT	368.98
G	103+11.69	30.64' RT	369.03
H	103+25.80	5.98' RT	369.79
I	103+43.74	29.24' LT	369.47
J	103+49.89	41.40' LT	369.35

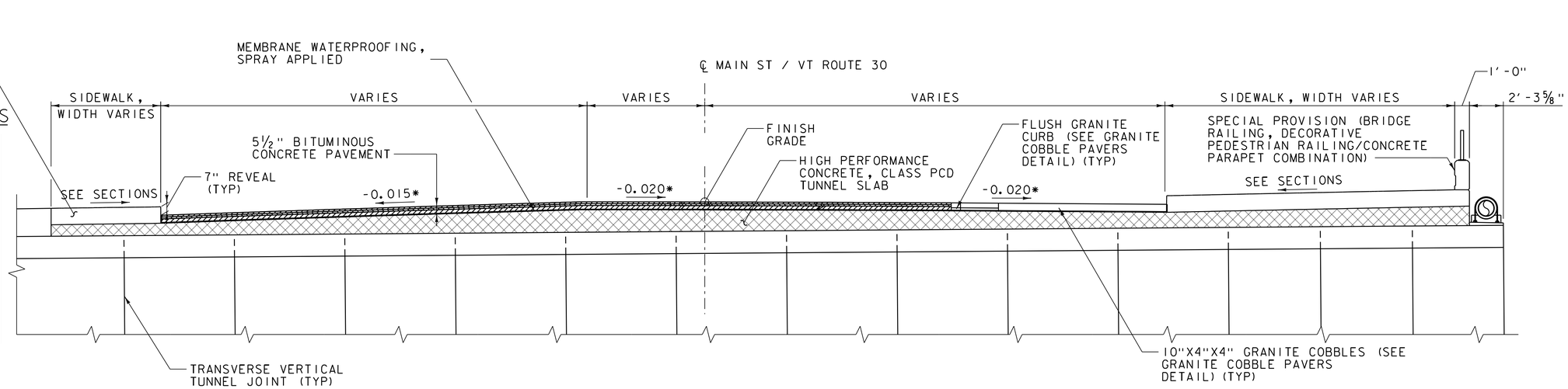

MAIN STREET TUNNEL SLAB - SECTION A-A

SCALE 1/4" = 1'-0"

* PERPENDICULAR TO ℄ MAIN ST / VT ROUTE 30

PROJECT NAME: MIDDLEBURY	
PROJECT NUMBER: WCRS(23)	
FILE NAME: z13g542tunnelslab.dgn	PLOT DATE: 4/30/2019
PROJECT LEADER: A.P. GUYETTE	DRAWN BY: R.H.BARNES
DESIGNED BY: R.H. BARNES	CHECKED BY: K.C. BARRY
TUNNEL SLAB DETAILS-MAIN STREET (1 OF 2)	SHEET 184 OF 328

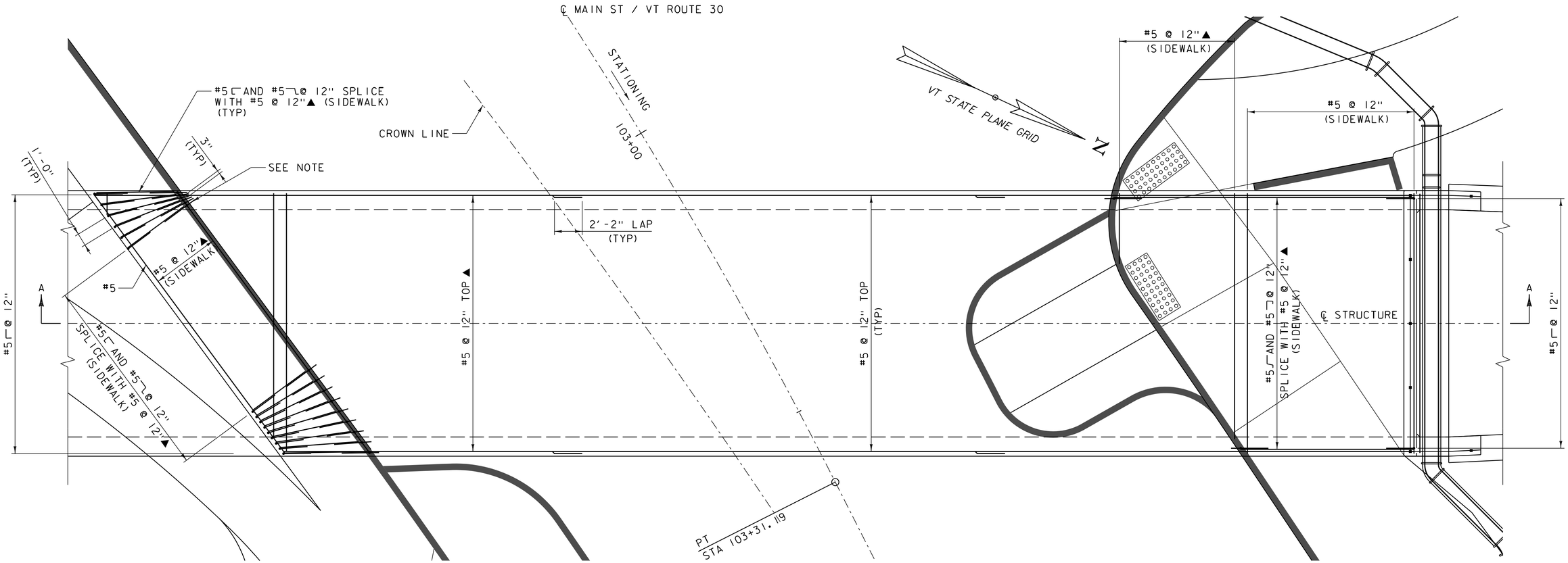

MAIN STREET TUNNEL SLAB REINFORCING - PLAN

SCALE 1/4" = 1'-0"

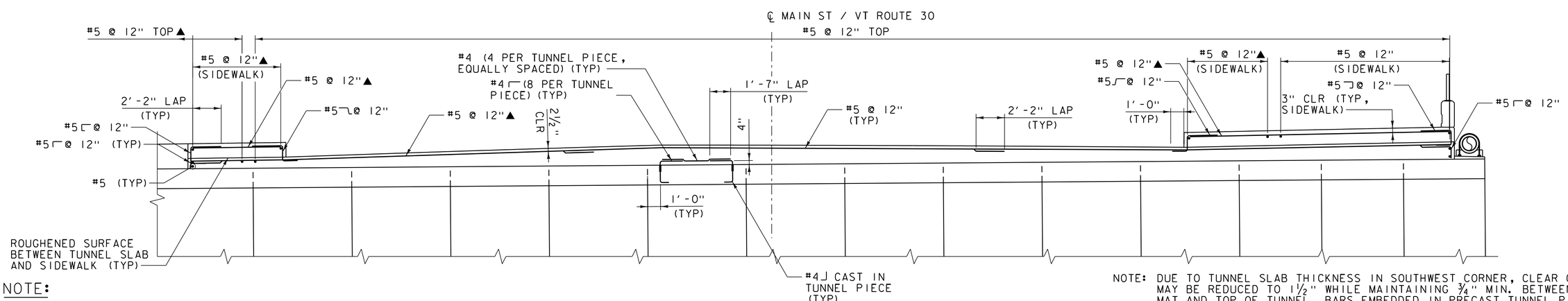

NOTE: DUE TO TUNNEL SLAB THICKNESS IN SOUTHWEST CORNER, CLEAR COVER MAY BE REDUCED TO 1 1/2" WHILE MAINTAINING 3/4" MIN. BETWEEN REINFORCING MAT AND TOP OF TUNNEL. BARS EMBEDDED IN PRECAST TUNNEL PIECES SHALL NOT BE LOCATED IN THE AREA OF REDUCED COVER.

MAIN STREET TUNNEL SLAB REINFORCING - SECTION A-A

SCALE 1/4" = 1'-0"

NOTE:

NF = NEAR FACE
FF = FAR FACE
EF = EACH FACE
▲ = CUT TO FIT IN FIELD
3" CLEAR, UNLESS OTHERWISE SPECIFIED ON THE PLANS.
2'-2" BAR LAP UNLESS OTHERWISE SPECIFIED ON THE PLANS.

PROJECT NAME: MIDDLEBURY	
PROJECT NUMBER: WCRS(23)	
FILE NAME: z13g542tunnelslab.dgn	PLOT DATE: 4/30/2019
PROJECT LEADER: A.P. GUYETTE	DRAWN BY: R.H.BARNES
DESIGNED BY: R.H. BARNES	CHECKED BY: K.C. BARRY
TUNNEL SLAB DETAILS-MAIN STREET (2 OF 2)	SHEET 185 OF 328

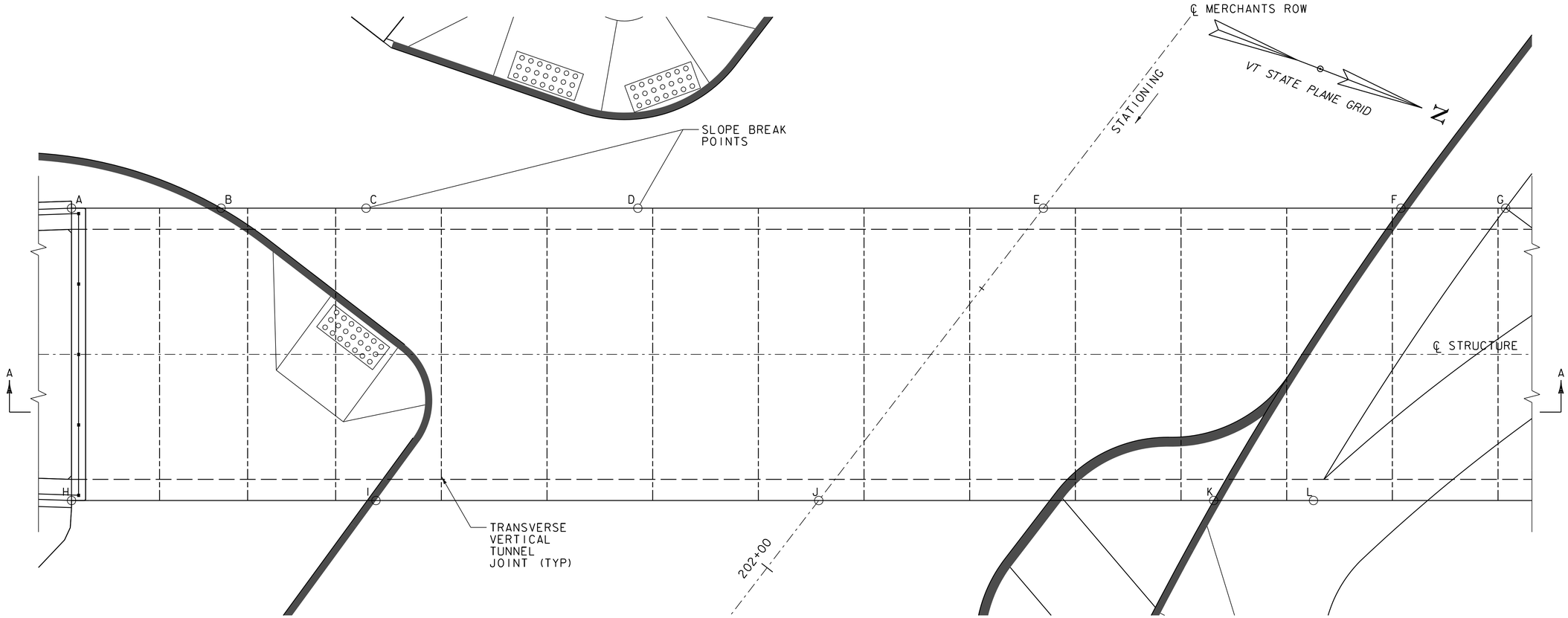

MERCHANTS ROW TUNNEL SLAB - PLAN

SCALE 1/4" = 1'-0"

TUNNEL SLAB ELEVATIONS

POINT	STATION	OFFSET	TOP OF CONCRETE EL.
A	202+09.84	54.70' RT	367.36
B	202+03.38	46.28' RT	367.32
C	201+97.11	38.12' RT	367.91
D	201+85.36	22.82' RT	367.96
E	201+67.82	0.00	368.11
F	201+52.36	20.13' LT	367.03
G	201+47.83	26.02' LT	366.91
H	202+26.30	42.05' RT	368.70
I	202+13.13	24.92' RT	368.78
J	201+93.99	0.00	369.06
K	201+76.91	22.23' LT	368.03
L	201+72.59	27.84' LT	367.97

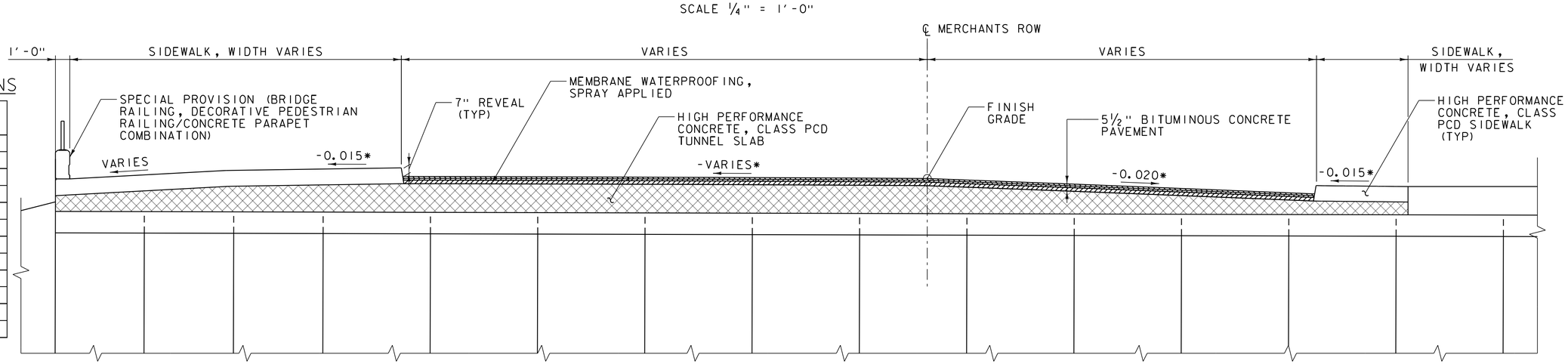

* PERPENDICULAR TO ℄ MERCHANTS ROW

MERCHANTS ROW TUNNEL SLAB - SECTION A-A

SCALE 1/4" = 1'-0"

PROJECT NAME: MIDDLEBURY	
PROJECT NUMBER: WCRS(23)	
FILE NAME: z13g542tunnelslab.dgn	PLOT DATE: 4/30/2019
PROJECT LEADER: A.P. GUYETTE	DRAWN BY: R.H.BARNES
DESIGNED BY: R.H. BARNES	CHECKED BY: K.C. BARRY
TUNNEL SLAB DETAILS-MERCH. ROW (1 OF 2)	SHEET 186 OF 328

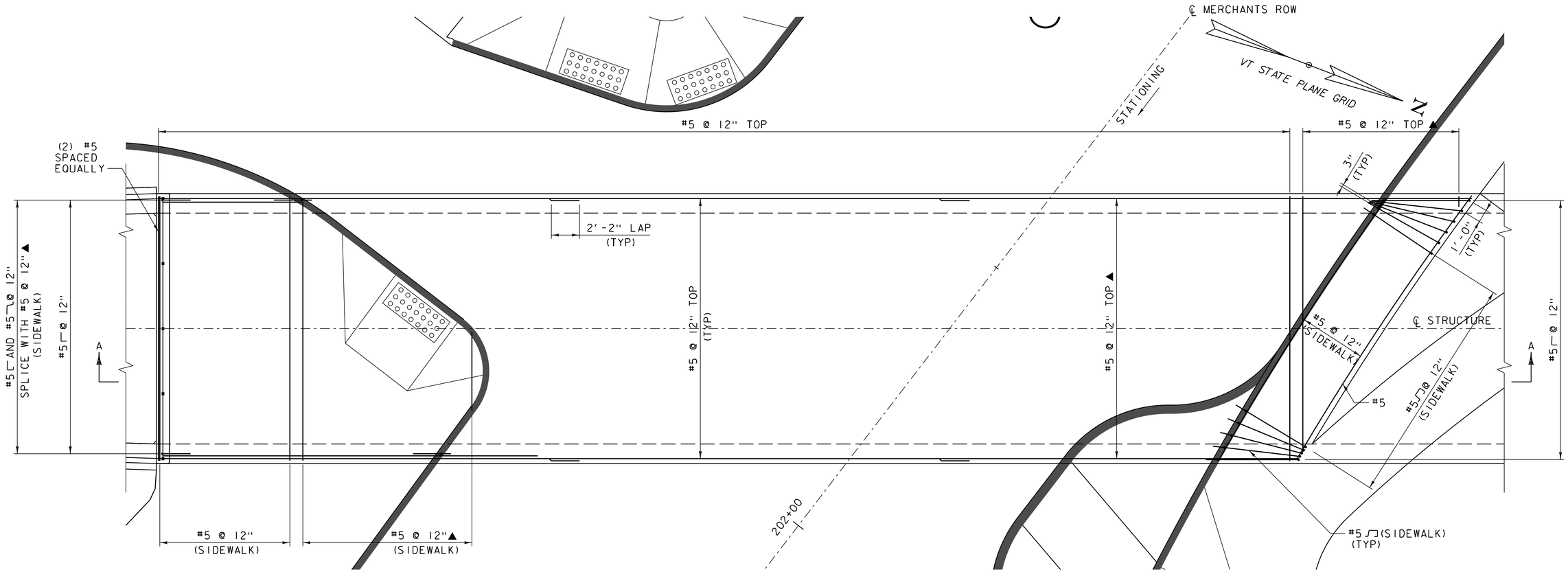

MERCHANTS ROW TUNNEL SLAB REINFORCING - PLAN

SCALE 1/4" = 1'-0"

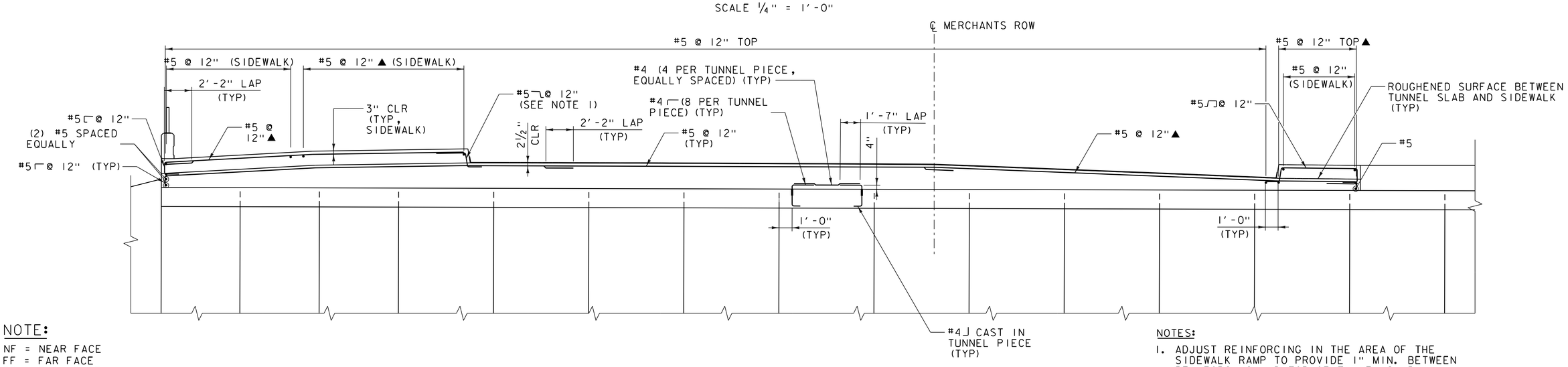

MERCHANTS ROW TUNNEL SLAB REINFORCING - SECTION A-A

SCALE 1/4" = 1'-0"

NOTE:

NF = NEAR FACE
FF = FAR FACE
EF = EACH FACE
▲ = CUT TO FIT IN FIELD
3" CLEAR, UNLESS OTHERWISE SPECIFIED ON THE PLANS.
2'-2" BAR LAP UNLESS OTHERWISE SPECIFIED ON THE PLANS.

NOTES:

1. ADJUST REINFORCING IN THE AREA OF THE SIDEWALK RAMP TO PROVIDE 1" MIN. BETWEEN REINFORCING AND TOP OF TUNNEL SLAB.

PROJECT NAME: MIDDLEBURY	
PROJECT NUMBER: WCRS(23)	
FILE NAME: z13g542tunnelslab.dgn	PLOT DATE: 4/30/2019
PROJECT LEADER: A.P. GUYETTE	DRAWN BY: R.H.BARNES
DESIGNED BY: R.H. BARNES	CHECKED BY: K.C. BARRY
TUNNEL SLAB DETAILS-MERCH. ROW (2 OF 2)	SHEET 187 OF 328

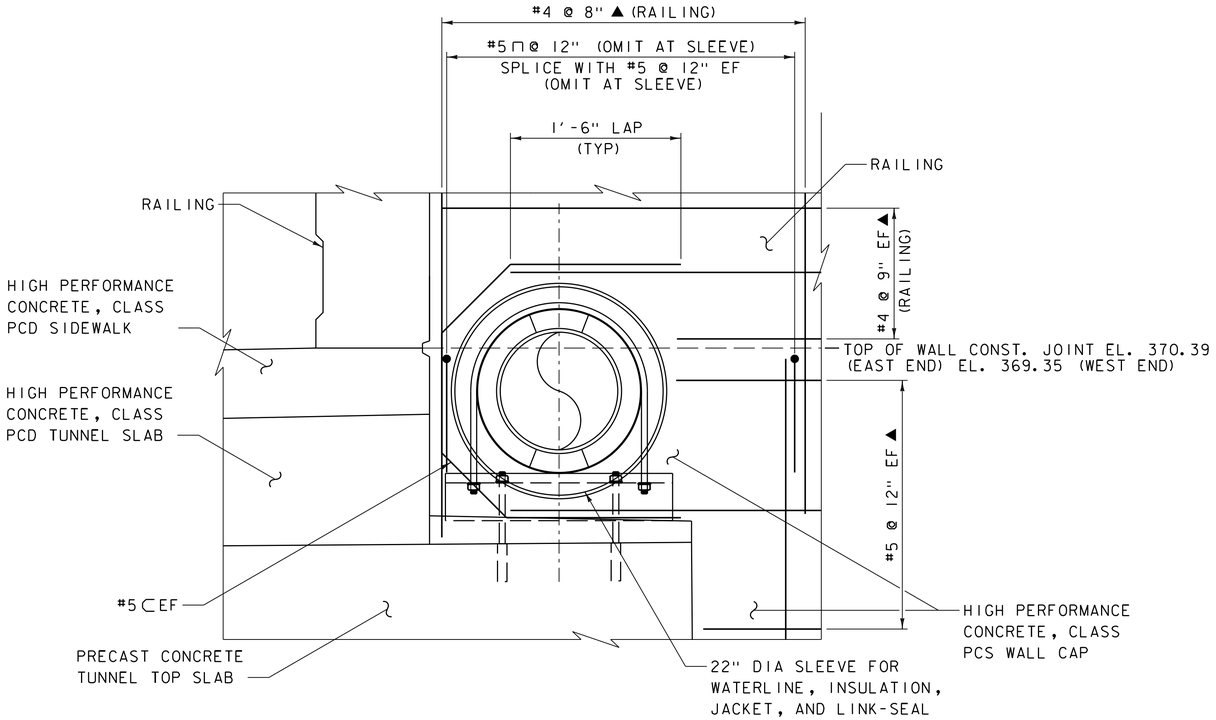

WATERLINE SLEEVE DETAIL

SCALE 1½" = 1'-0"

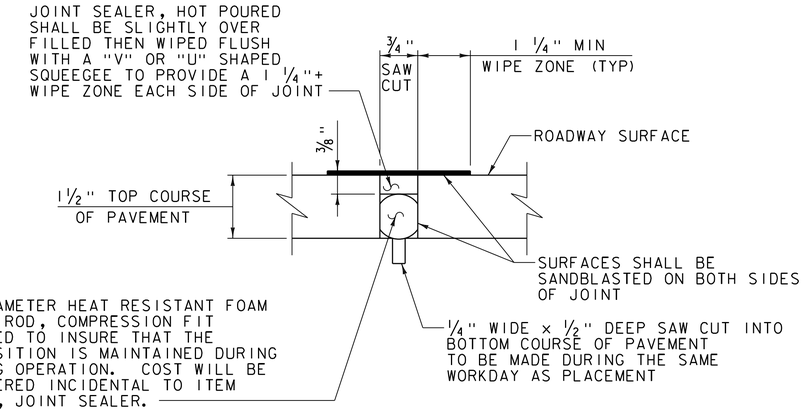

SAW CUT JOINT DETAIL

NOT TO SCALE

1. JOINT IS TO BE LOCATED ACCURATELY BY STRING LINING OR OTHER MEANS, PRIOR TO PAVING, SO THAT THE SAW CUTS WILL BE MADE DIRECTLY OVER THE END OF THE CONCRETE TUNNEL SLAB. JOINT SHALL BE CUT DRY IN A SINGLE PASS AND BE SEALED WITHIN 24 HOURS OR PRIOR TO EXPOSURE TO TRAFFIC. JOINT SHALL BE CLEANED PRIOR TO APPLYING THE JOINT SEALER.
2. SAW CUT JOINT WILL BE PAID FOR UNDER ITEM 524.11, "JOINT SEALER, HOT POURED".

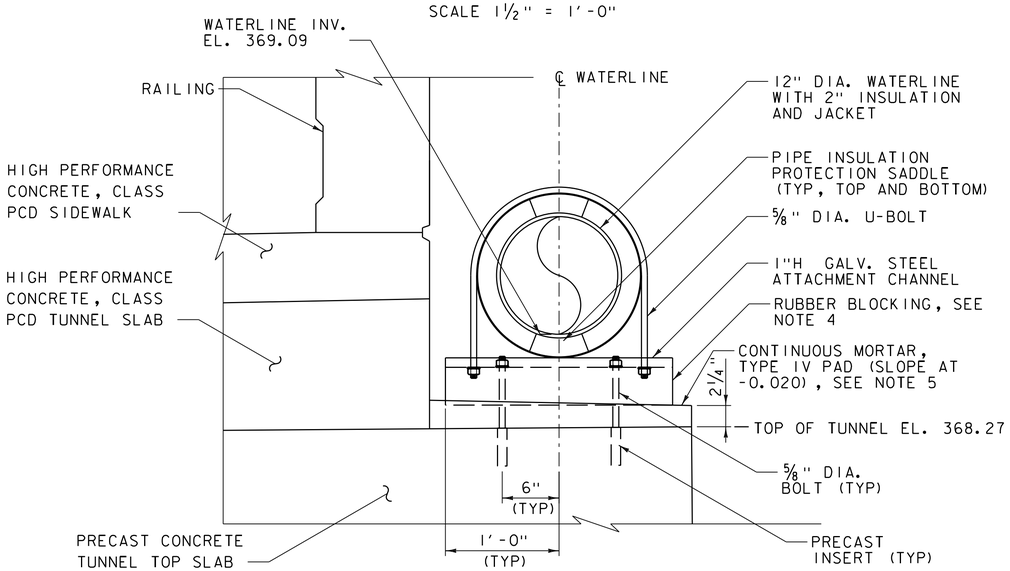

WATERLINE ATTACHMENT DETAIL

SCALE 1½" = 1'-0"

NOTES

1. TUNNEL, TUNNEL SLAB, AND SIDEWALK REINFORCING NOT SHOWN FOR CLARITY.
2. U-BOLTS AND CONNECTION BOLTS SHALL MEET THE REQUIREMENTS OF SUBSECTION 714.04.
3. WATERLINE ATTACHMENT (U-BOLT, SADDLE, CHANNEL, BLOCKING, BOLTS, AND INSERTS) SHALL BE SPACED AT 5'-0" MAX. BETWEEN SLEEVES AND LINK-SEAL AT ENDS.
4. RUBBER BLOCKING SHALL BE MADE OF 100% RECYCLED RUBBER AND POLYURETHANE PREPOLYMER WITH A LOAD CAPACITY OF 1000 LB PER SUPPORT. RUBBER BLOCKING SHALL BE 6"Wx4"2'-0"L. RUBBER BLOCKING SHALL BE CAPABLE OF ACCEPTING GALV. STEEL ATTACHMENT CHANNEL, U-BOLT, ATTACHMENT BOLT, AND ASSOCIATED HARDWARE.
5. MORTAR PAD SHALL BE LEVEL UNDER RUBBER BLOCKING.
6. ALTERNATIVE RUBBER BLOCKING AND CHANNEL CONFIGURATIONS MAY BE SUBMITTED TO THE ENGINEER FOR REVIEW AND APPROVAL.

NOTE:

NF = NEAR FACE
FF = FAR FACE
EF = EACH FACE
▲ = CUT TO FIT IN FIELD
3" CLEAR, UNLESS OTHERWISE SPECIFIED ON THE PLANS.
2'-2" BAR LAP UNLESS OTHERWISE SPECIFIED ON THE PLANS.

PROJECT NAME: MIDDLEBURY	
PROJECT NUMBER: WCRS(23)	
FILE NAME: zl3g542app_slabel.dgn	PLOT DATE: 4/30/2019
PROJECT LEADER: A.P. GUYETTE	DRAWN BY: R.H. BARNES
DESIGNED BY: R.H. BARNES	CHECKED BY: K.C. BARRY
STRUCTURE DETAILS (1 OF 2)	SHEET 188 OF 328

VHB 57603

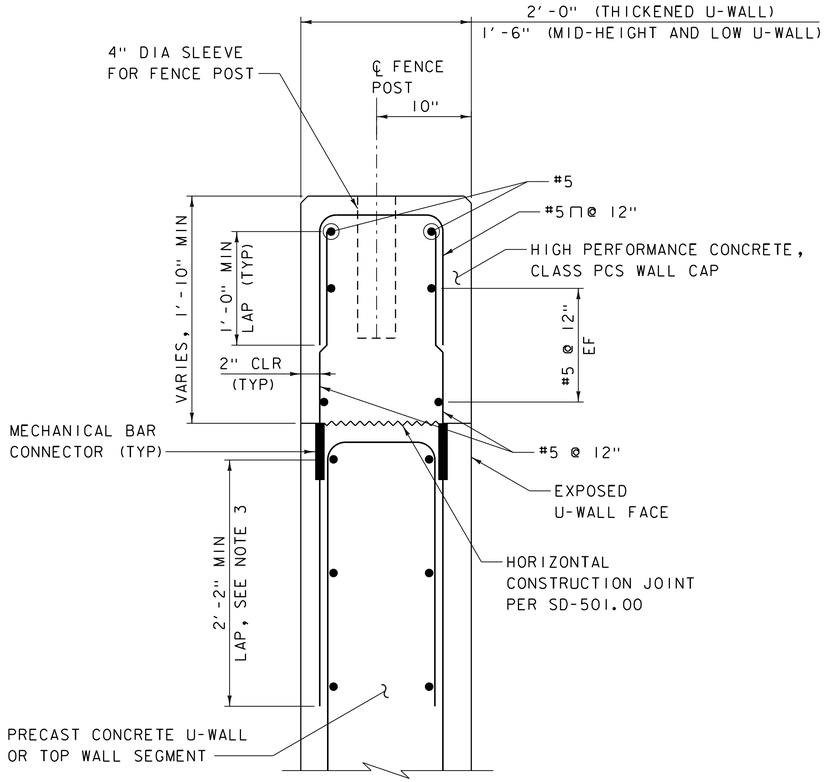

CAST-IN-PLACE CONCRETE WALL CAP - SECTION

SCALE 1½" = 1'-0"

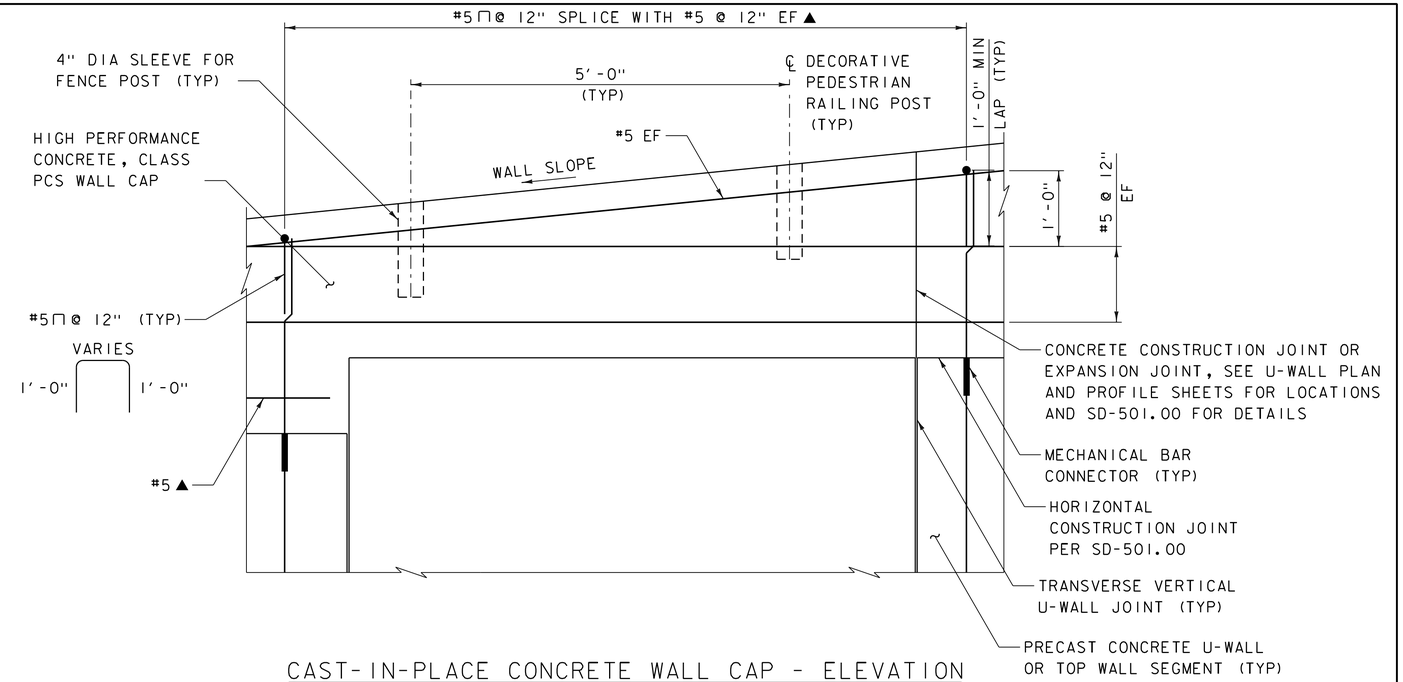

CAST-IN-PLACE CONCRETE WALL CAP - ELEVATION
(WALL SLOPES > 6.5%)

SCALE 1" = 1'-0"

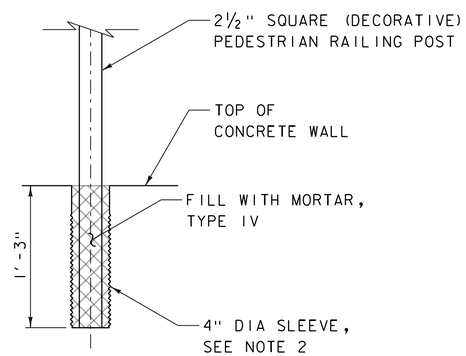

DECORATIVE PEDESTRIAN RAILING POST SLEEVE DETAIL

NOT TO SCALE

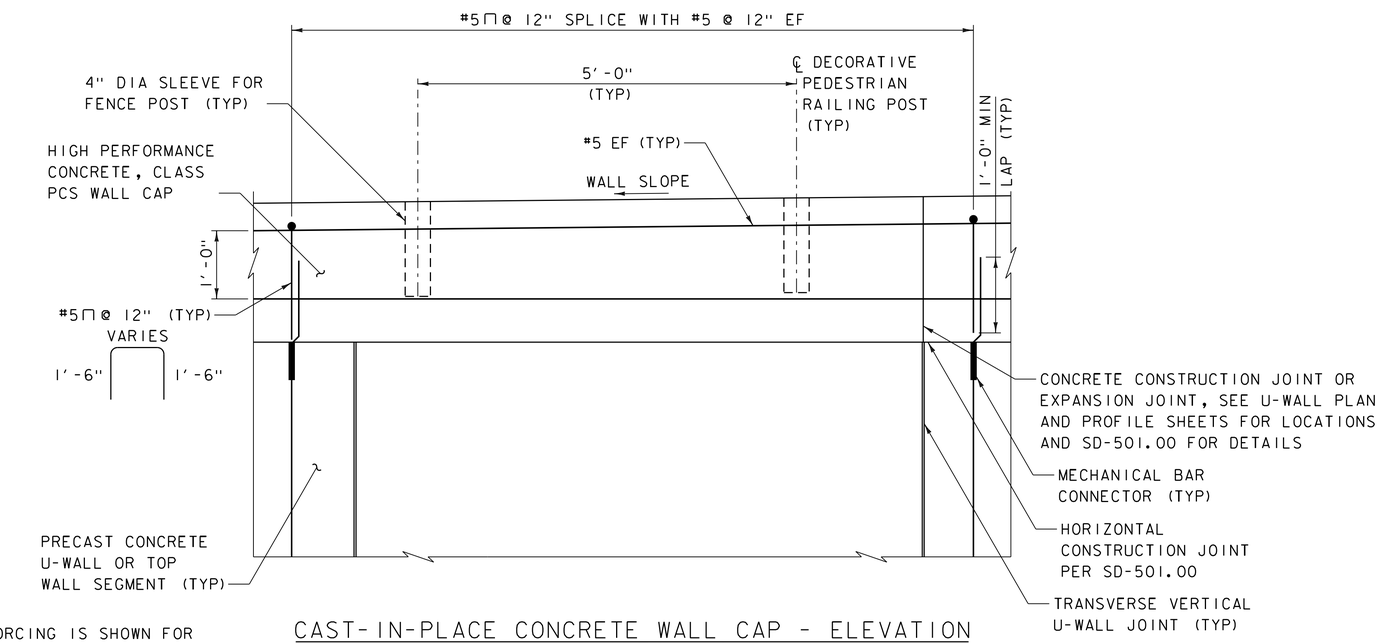

CAST-IN-PLACE CONCRETE WALL CAP - ELEVATION
(WALL SLOPES < 6.5%)

SCALE 1" = 1'-0"

NOTE:

NF = NEAR FACE
FF = FAR FACE
EF = EACH FACE
▲ = CUT TO FIT IN FIELD
3" CLEAR, UNLESS OTHERWISE SPECIFIED ON THE PLANS.
2'-2" BAR LAP UNLESS OTHERWISE SPECIFIED ON THE PLANS.

NOTES

1. NOT ALL PRECAST CONCRETE U-WALL OR TOP WALL SEGMENT REINFORCING IS SHOWN FOR CLARITY.
2. SLEEVES FOR DECORATIVE PEDESTRIAN RAILING POSTS SHALL BE CORRUGATED STEEL WITH A MINIMUM 24-GUAGE WALL THICKNESS AND BE GALVANIZED PER ASTM A653. THE TOP 3" SHALL BE FORMED WITH A REMOVABLE FORM SUCH THAT NO SLEEVE IS EXPOSED. POLYETHYLENE OR POLYPROPYLENE SLEEVES MAY BE USED WITH THE APPROVAL OF THE ENGINEER.
3. LAP TO REINFORCING IN U-WALL STEM IS APPLICABLE TO THICKENED AND MID-HEIGHT U-WALLS WITHOUT TOP WALL SEGMENTS ONLY.

PROJECT NAME: MIDDLEBURY	
PROJECT NUMBER: WCRS(23)	
FILE NAME: z13g542sup.dgn	PLOT DATE: 4/30/2019
PROJECT LEADER: A.P. GUYETTE	DRAWN BY: R.H. BARNES
DESIGNED BY: K.C. BARRY	CHECKED BY: K.C. BARRY
STRUCTURE DETAILS (2 OF 2)	SHEET 189 OF 328

VHB 57603

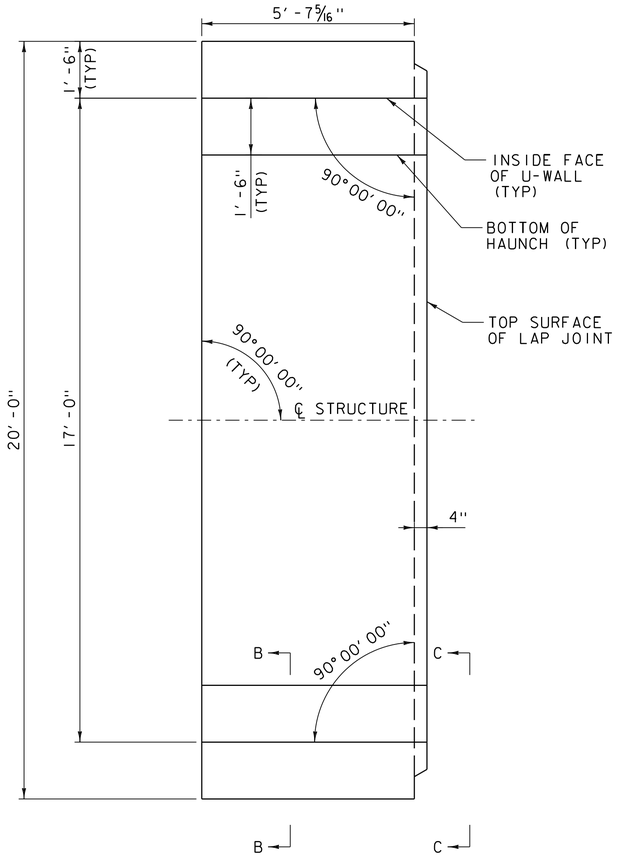

PLAN

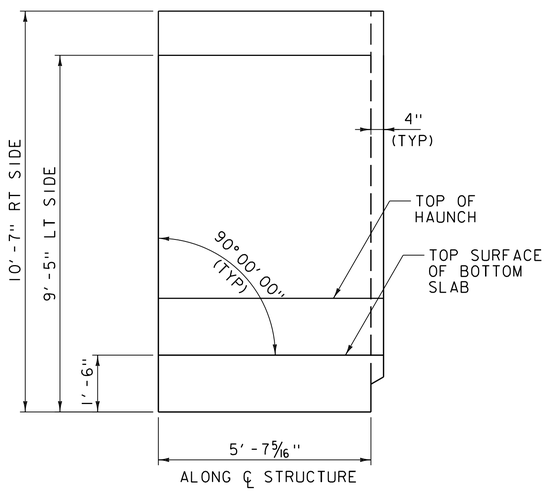

SECTION ALONG CENTERLINE STRUCTURE

UNIQUE U-WALL PIECE DETAILS - TYPE A

SCALE 1/2" = 1' - 0"

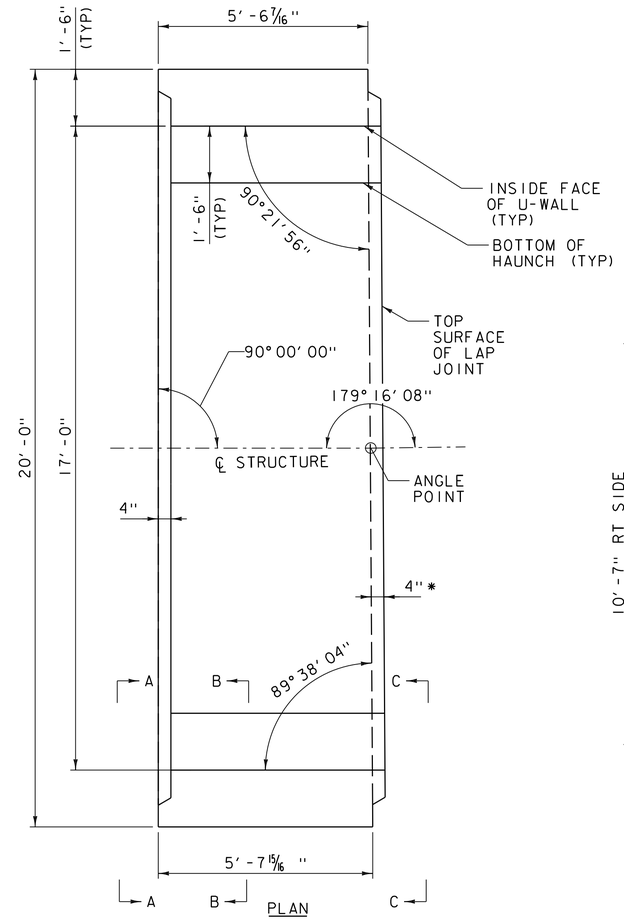

PLAN

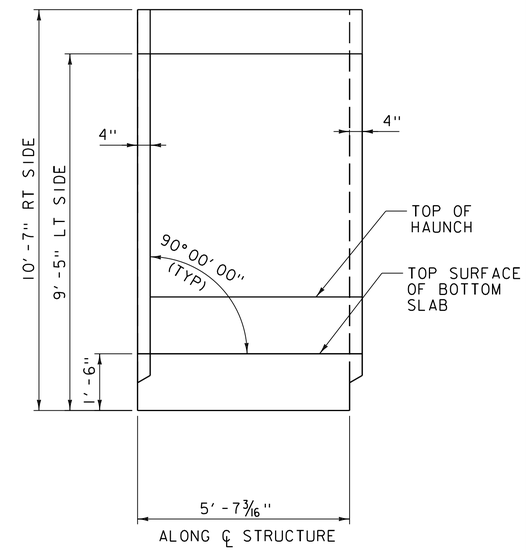

SECTION ALONG CENTERLINE STRUCTURE

UNIQUE U-WALL PIECE DETAILS - TYPE B

SCALE 1/2" = 1' - 0"

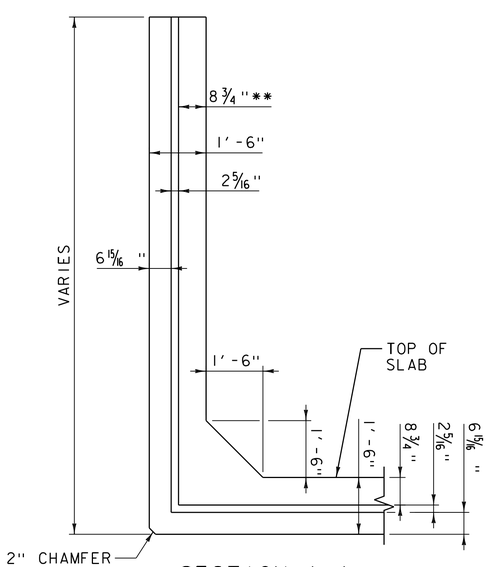

SECTION A-A

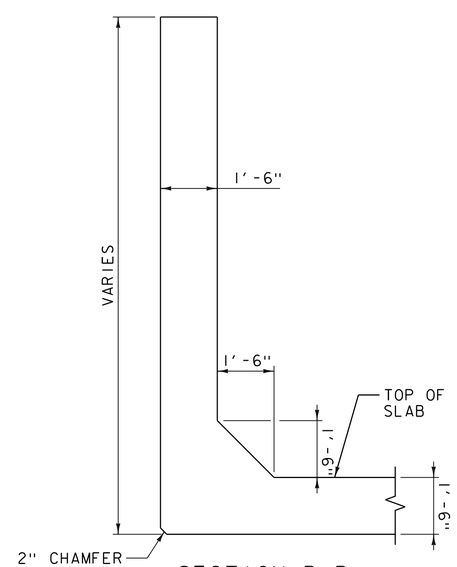

SECTION B-B

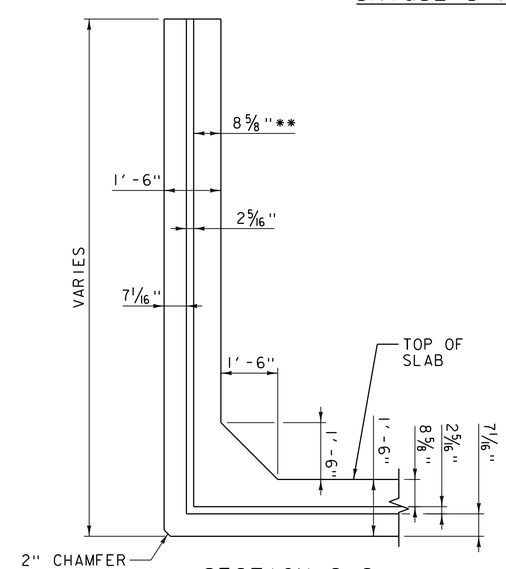

SECTION C-C

NOTE: SECTIONS A-A, B-B, AND C-C MAY BE MIRRORED BASED ON DIRECTION OF SECTION ARROWS.

* DIMENSION PERPENDICULAR TO CENTERLINE OF JOINT

** VARIES AT ANGLE TRANSITIONS

PROJECT NAME: MIDDLEBURY	
PROJECT NUMBER: WCRS(23)	
FILE NAME: zl3g542uwalldtl.dgn	PLOT DATE: 4/30/2019
PROJECT LEADER: A.P. GUYETTE	DRAWN BY: R.H. BARNES
DESIGNED BY: R.H. BARNES	CHECKED BY: K.C. BARRY
SOUTH U-WALL PIECE DETAILS (1 OF 9)	SHEET 190 OF 328

VHB 57603

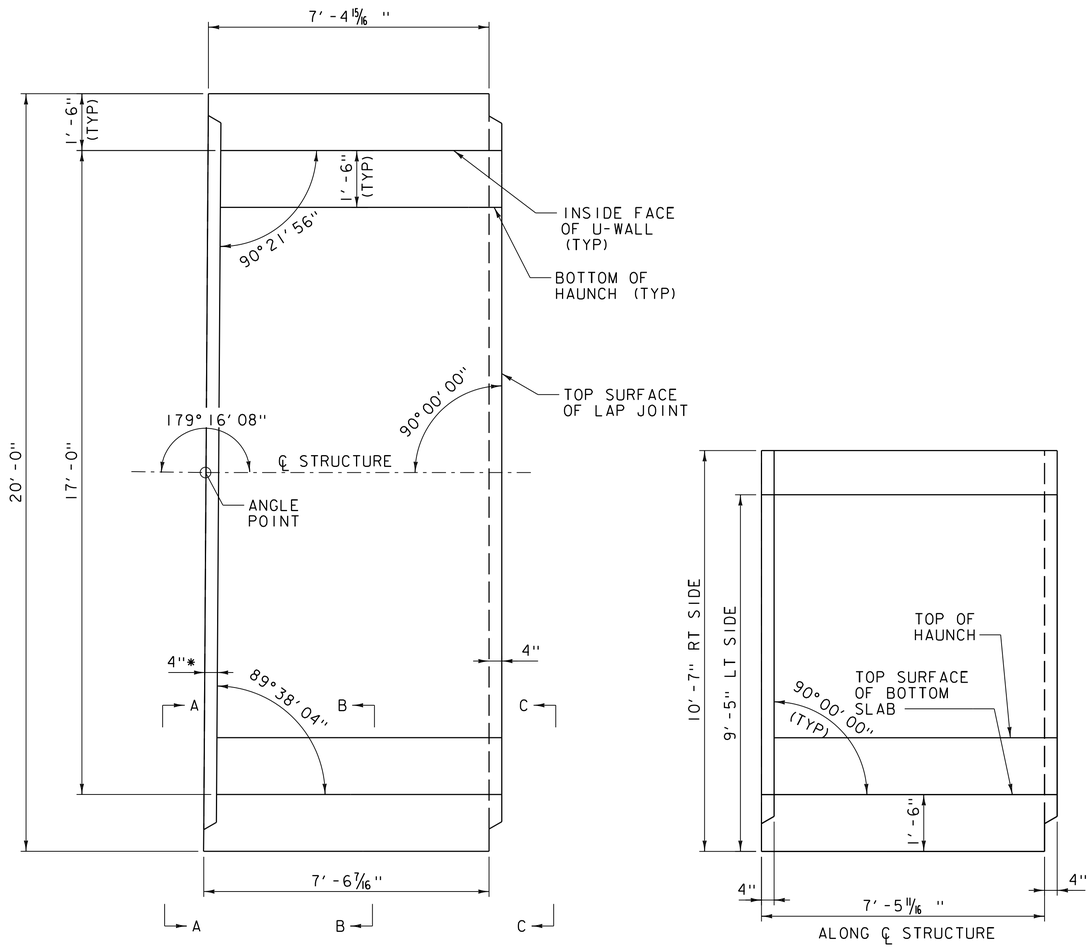

PLAN

SECTION ALONG CENTERLINE STRUCTURE

UNIQUE U-WALL PIECE DETAILS - TYPE C

SCALE 1/2" = 1' - 0"

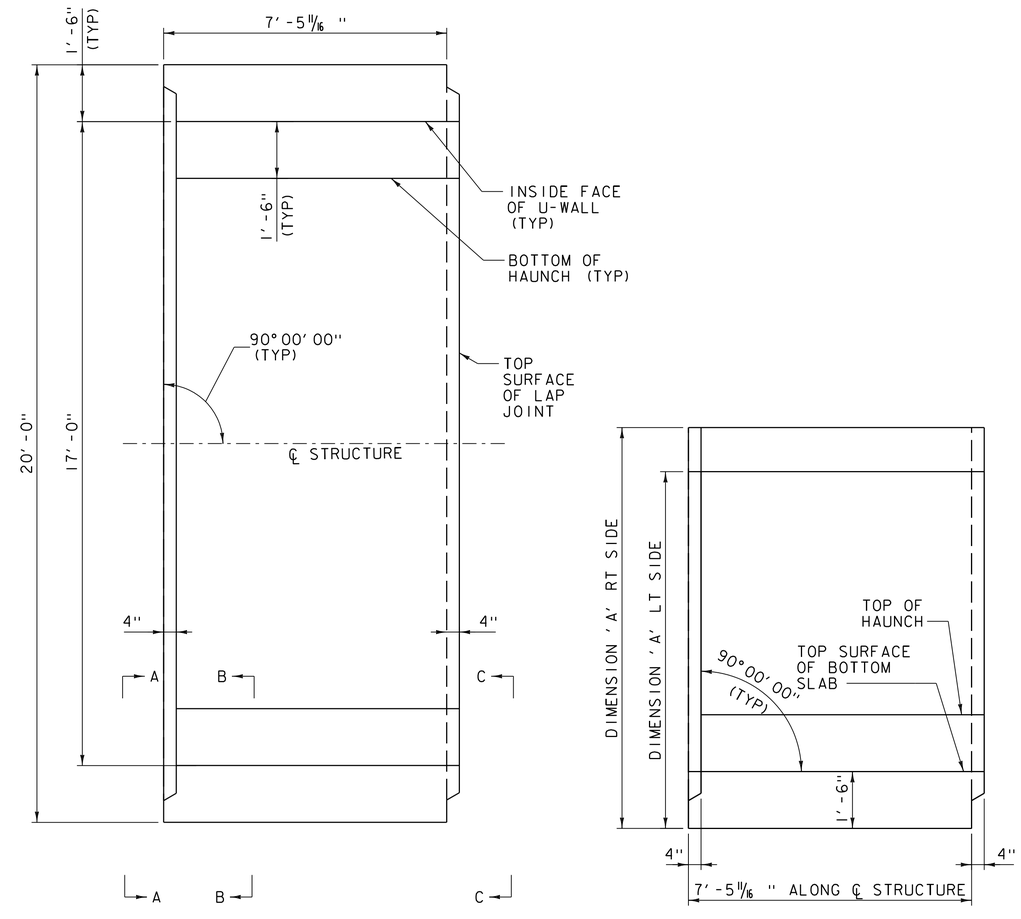

PLAN

SECTION ALONG CENTERLINE STRUCTURE

UNIQUE U-WALL PIECE DETAILS - TYPES D & I

SCALE 1/2" = 1' - 0"

DIMENSION 'A' TABLE - TYPES D & I

UNIQUE PIECE TYPE	DIMENSION 'A'	
	LT SIDE	RT SIDE
TYPE D	9'-5"	10'-7"
TYPE I	10'-11"	11'-11"

* DIMENSION PERPENDICULAR TO CENTERLINE OF JOINT

NOTE:
SEE SOUTH U-WALL PIECE DETAILS (1 OF 9) FOR SECTION A-A, SECTION B-B, AND SECTION C-C.

PROJECT NAME: MIDDLEBURY	
PROJECT NUMBER: WCRS(23)	
FILE NAME: zl3g542uwalldtl.dgn	PLOT DATE: 4/30/2019
PROJECT LEADER: A.P. GUYETTE	DRAWN BY: R.H. BARNES
DESIGNED BY: R.H. BARNES	CHECKED BY: K.C. BARRY
SOUTH U-WALL PIECE DETAILS (2 OF 9)	SHEET 191 OF 328

VHB 57603

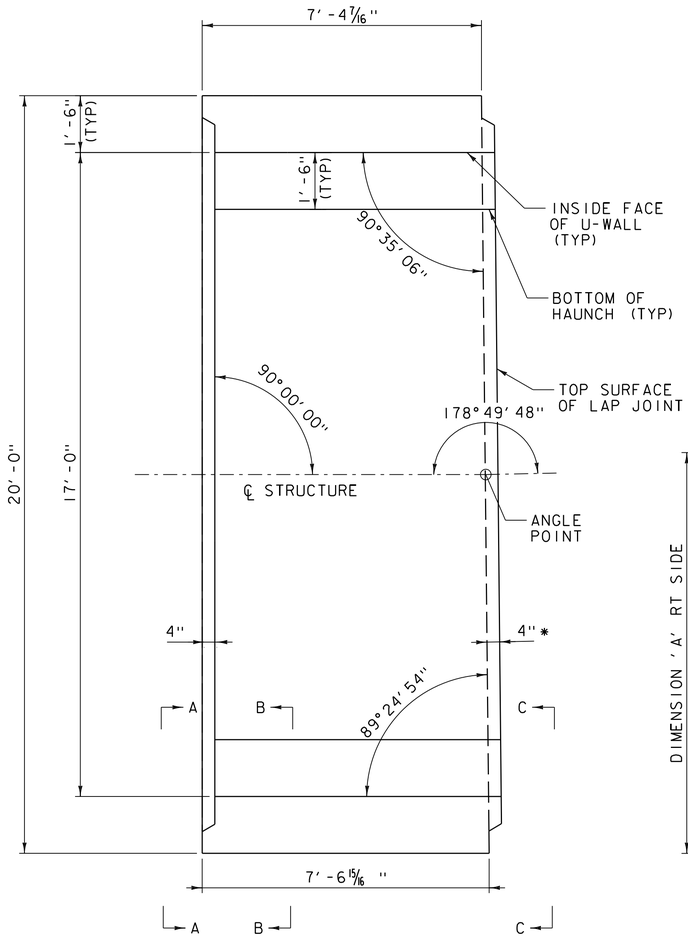

PLAN

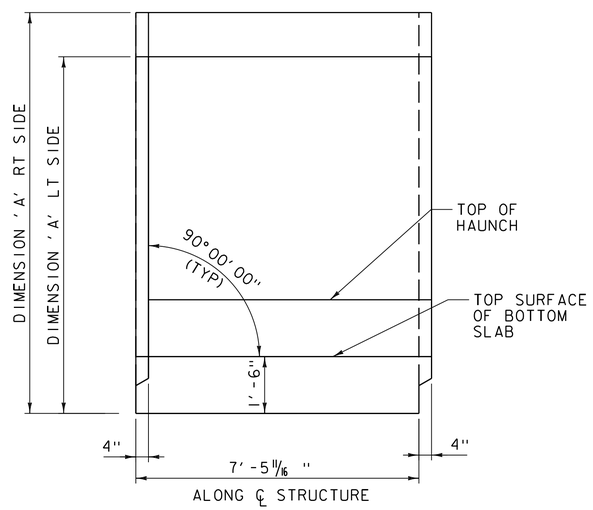

SECTION ALONG CENTERLINE STRUCTURE

UNIQUE U-WALL PIECE DETAILS - TYPES E, G & J

SCALE 1/2" = 1' - 0"

DIMENSION 'A' TABLE - TYPES E, G & J

UNIQUE PIECE TYPE	DIMENSION 'A'	
	LT SIDE	RT SIDE
TYPE E	9'-5"	10'-7"
TYPE G	10'-11"	10'-7"
TYPE J	10'-11"	11'-11"

NOTE:
SEE SOUTH U-WALL PIECE DETAILS (1 OF 9) FOR SECTION A-A, SECTION B-B, AND SECTION C-C.

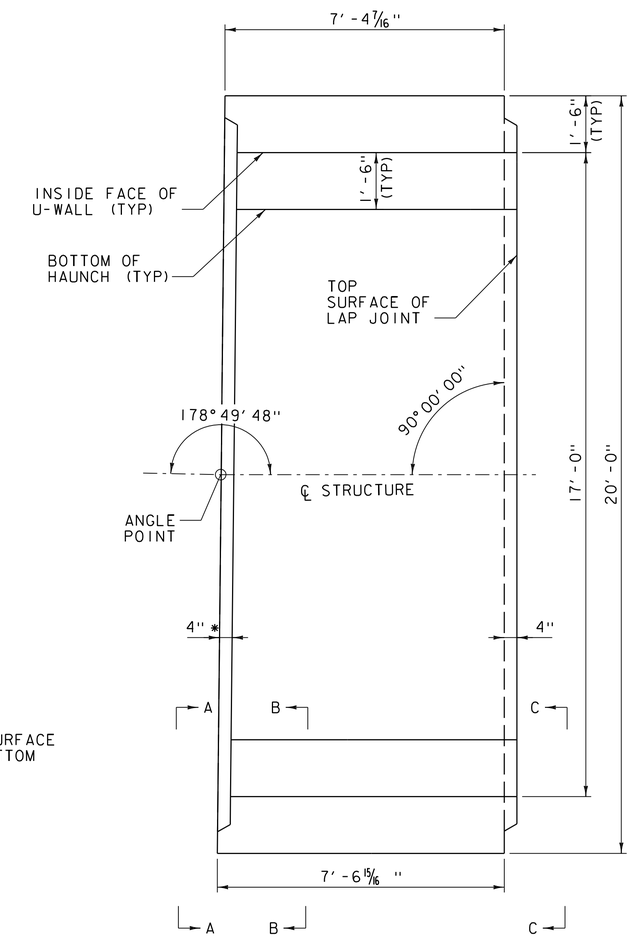

PLAN

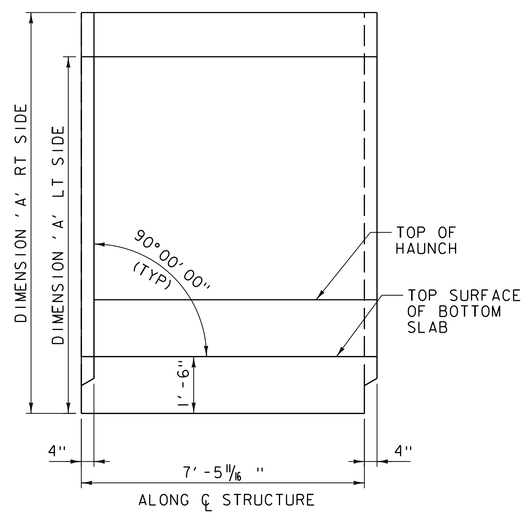

SECTION ALONG CENTERLINE STRUCTURE

UNIQUE U-WALL PIECE DETAILS - TYPES F & H

SCALE 1/2" = 1' - 0"

DIMENSION 'A' TABLE - TYPES F & H

UNIQUE PIECE TYPE	DIMENSION 'A'	
	LT SIDE	RT SIDE
TYPE F	9'-5"	10'-7"
TYPE H	10'-11"	10'-7"

* DIMENSION PERPENDICULAR TO CENTERLINE OF JOINT

PROJECT NAME: MIDDLEBURY
PROJECT NUMBER: WCRS(23)

FILE NAME: zl3g542uwalldtl.dgn
PROJECT LEADER: A.P. GUYETTE
DESIGNED BY: R.H. BARNES
SOUTH U-WALL PIECE DETAILS (3 OF 9)

PLOT DATE: 4/30/2019
DRAWN BY: R.H. BARNES
CHECKED BY: K.C. BARRY
SHEET 192 OF 328

VHB 57603

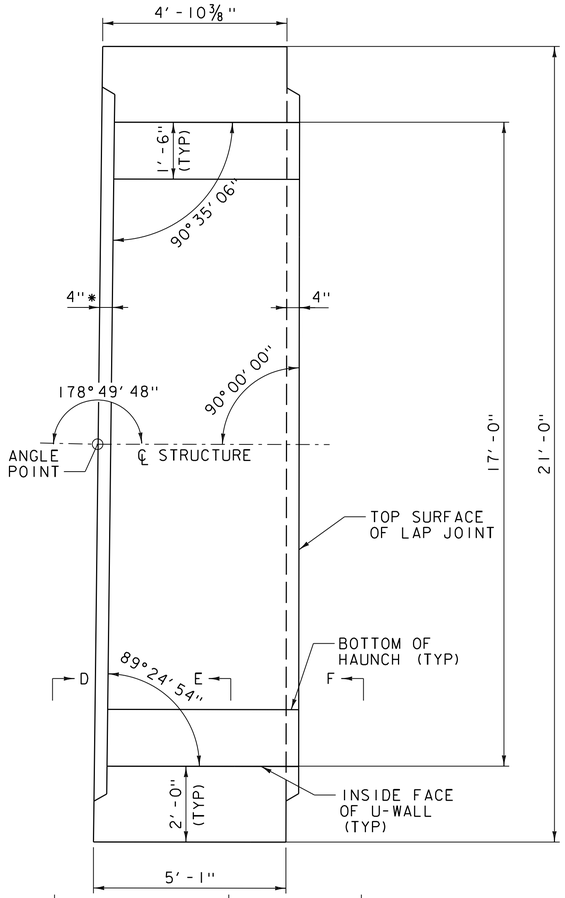

PLAN

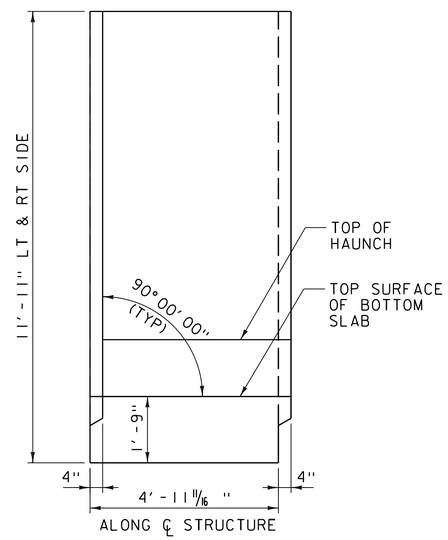

SECTION ALONG CENTERLINE STRUCTURE

UNIQUE U-WALL PIECE DETAILS - TYPE K

SCALE 1/2" = 1' - 0"

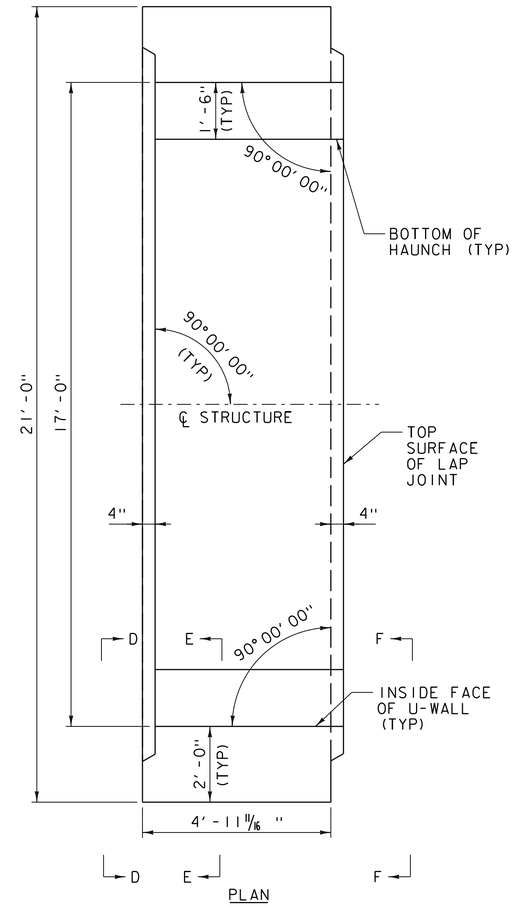

PLAN

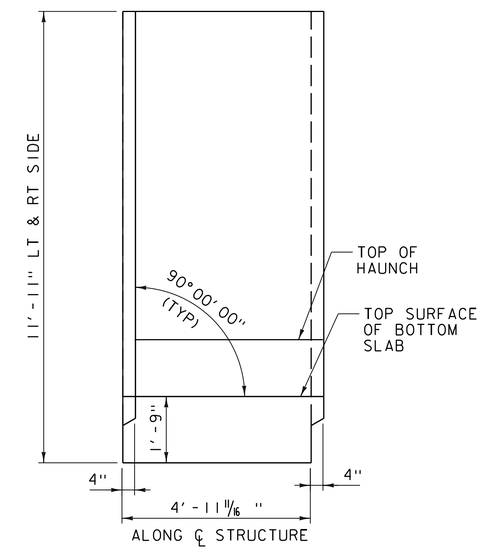

SECTION ALONG CENTERLINE STRUCTURE

UNIQUE U-WALL PIECE DETAILS - TYPE L

SCALE 1/2" = 1' - 0"

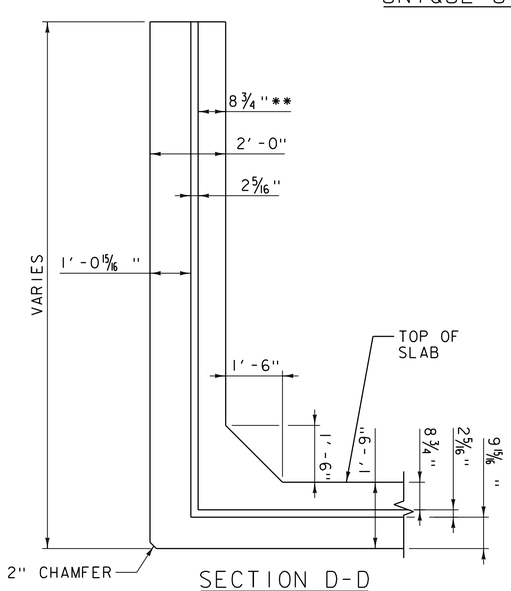

SECTION D-D

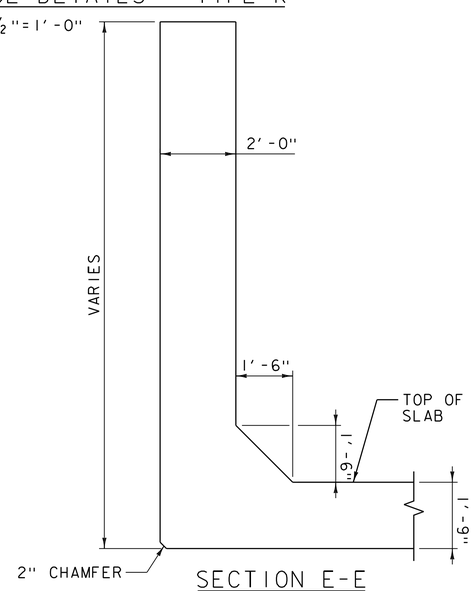

SECTION E-E

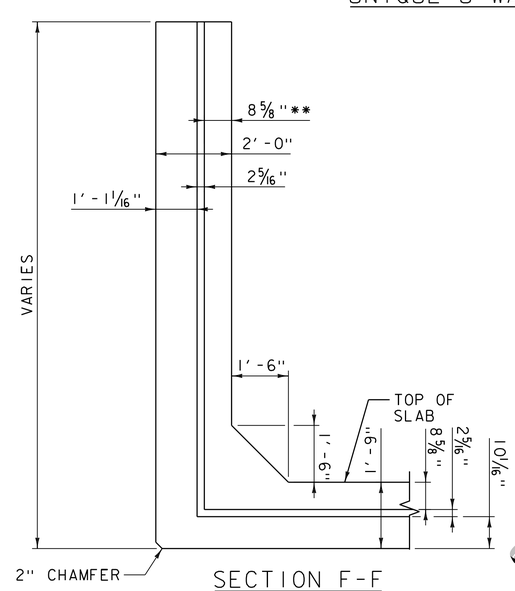

SECTION F-F

NOTE: SECTIONS D-D, E-E, AND F-F MAY BE MIRRORED BASED ON DIRECTION OF SECTION ARROWS.

* DIMENSION PERPENDICULAR TO CENTERLINE OF JOINT

** VARIES AT ANGLE TRANSITION

PROJECT NAME: MIDDLEBURY	
PROJECT NUMBER: WCRS(23)	
FILE NAME: zl3g542uwalldtl.dgn	PLOT DATE: 4/30/2019
PROJECT LEADER: A.P. GUYETTE	DRAWN BY: R.H. BARNES
DESIGNED BY: R.H. BARNES	CHECKED BY: K.C. BARRY
SOUTH U-WALL PIECE DETAILS (4 OF 9)	SHEET 193 OF 328

VHB 57603

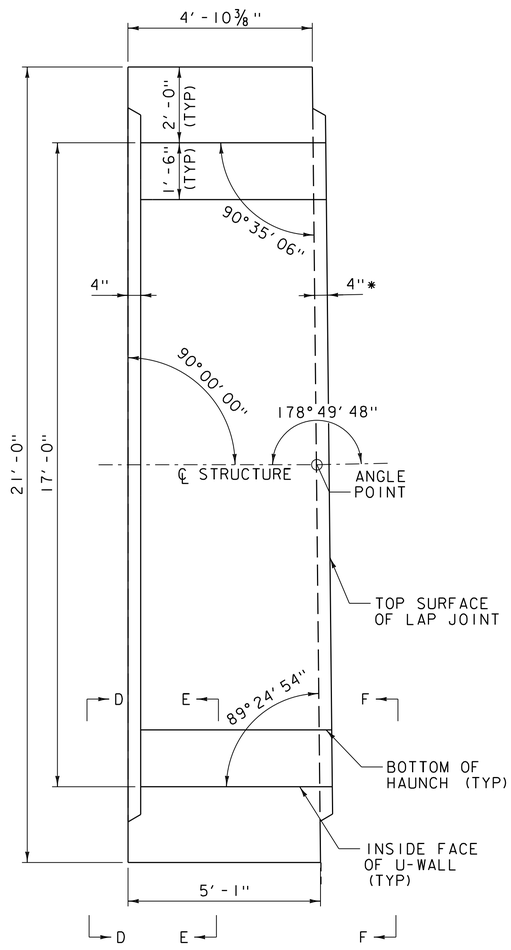

PLAN

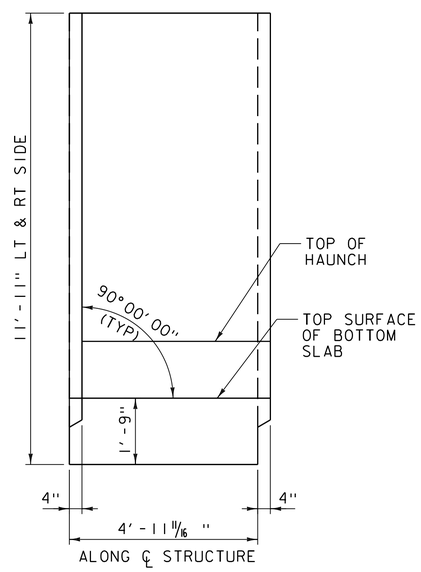

SECTION ALONG CENTERLINE STRUCTURE

UNIQUE U-WALL PIECE DETAILS - TYPE M

SCALE 1/2" = 1' - 0"

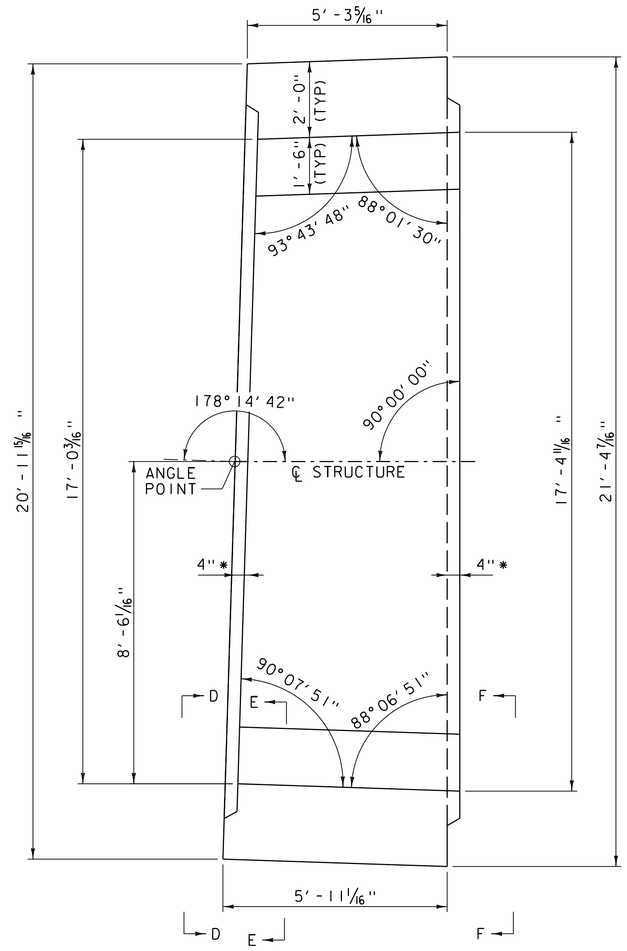

PLAN

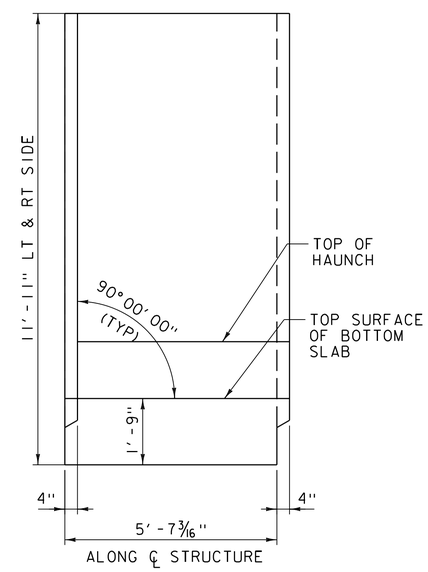

SECTION ALONG CENTERLINE STRUCTURE

UNIQUE U-WALL PIECE DETAILS - TYPE N

SCALE 1/2" = 1' - 0"

* DIMENSION PERPENDICULAR TO CENTERLINE OF JOINT

NOTE:
SEE SOUTH U-WALL PIECE DETAILS (4 OF 9) FOR SECTION D-D, SECTION E-E, AND SECTION F-F.

PROJECT NAME: MIDDLEBURY	
PROJECT NUMBER: WCRS(23)	
FILE NAME: zl3g542uwalldtl.dgn	PLOT DATE: 4/30/2019
PROJECT LEADER: A.P. GUYETTE	DRAWN BY: R.H. BARNES
DESIGNED BY: R.H. BARNES	CHECKED BY: K.C. BARRY
SOUTH U-WALL PIECE DETAILS (5 OF 9)	SHEET 194 OF 328

VHB 57603

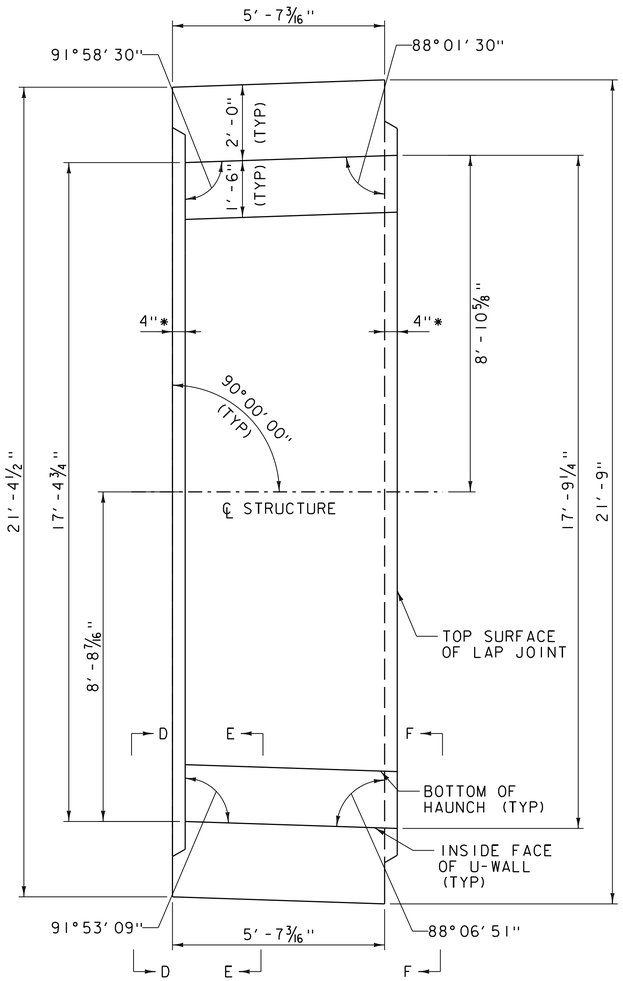

PLAN

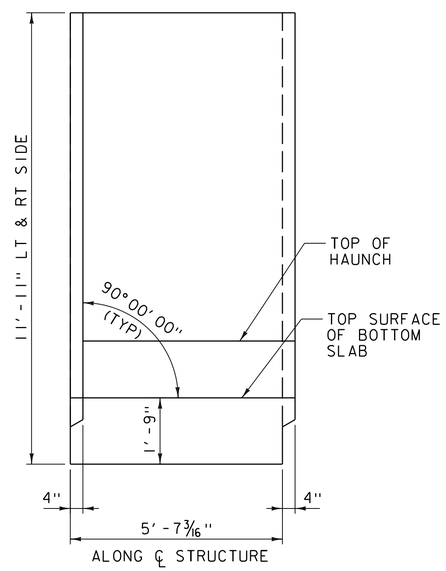

SECTION ALONG CENTERLINE STRUCTURE

UNIQUE U-WALL PIECE DETAILS - TYPE O

SCALE 1/2"=1'-0"

* DIMENSION PERPENDICULAR TO CENTERLINE OF JOINT

NOTE:
SEE SOUTH U-WALL PIECE DETAILS (4 OF 9) FOR SECTION D-D, SECTION E-E, AND SECTION F-F.

PROJECT NAME: MIDDLEBURY	
PROJECT NUMBER: WCRS(23)	
FILE NAME: z13g542uwalldtl.dgn	PLOT DATE: 4/30/2019
PROJECT LEADER: A.P. GUYETTE	DRAWN BY: R.H. BARNES
DESIGNED BY: R.H. BARNES	CHECKED BY: K.C. BARRY
SOUTH U-WALL PIECE DETAILS (6 OF 9)	SHEET 195 OF 328

VHB 57603

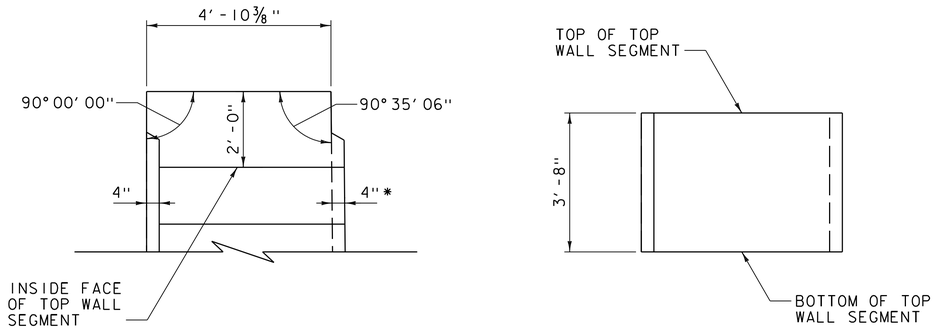

PLAN ELEVATION

UNIQUE TOP WALL SEGMENT PIECE DETAILS - TYPES AA

SCALE 1/2"=1'-0"

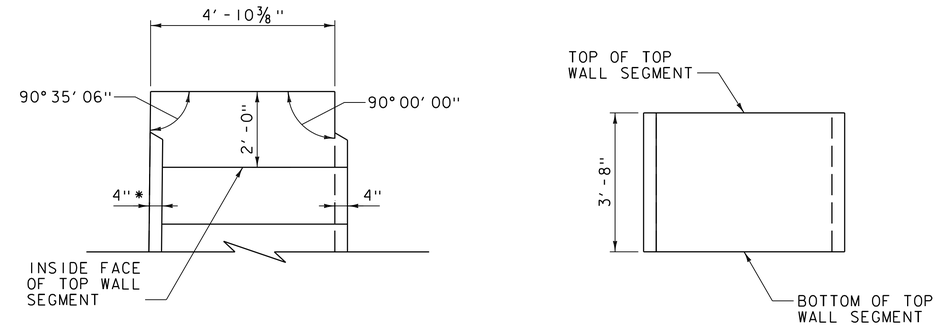

PLAN ELEVATION

UNIQUE TOP WALL SEGMENT PIECE DETAILS - TYPE BB

SCALE 1/2"=1'-0"

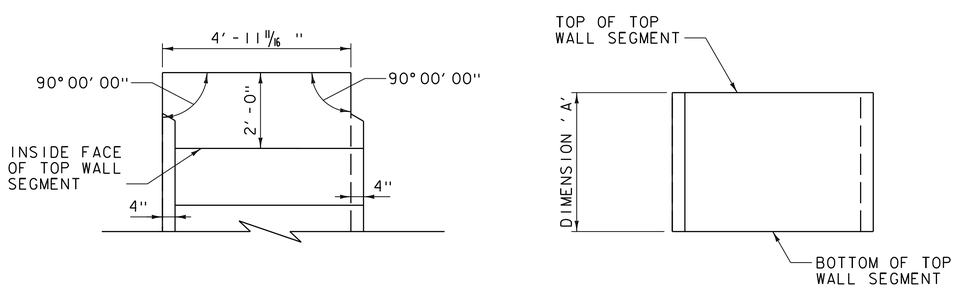

PLAN ELEVATION

UNIQUE TOP WALL SEGMENT PIECE DETAILS - TYPES CC, DD & EE

SCALE 1/2"=1'-0"

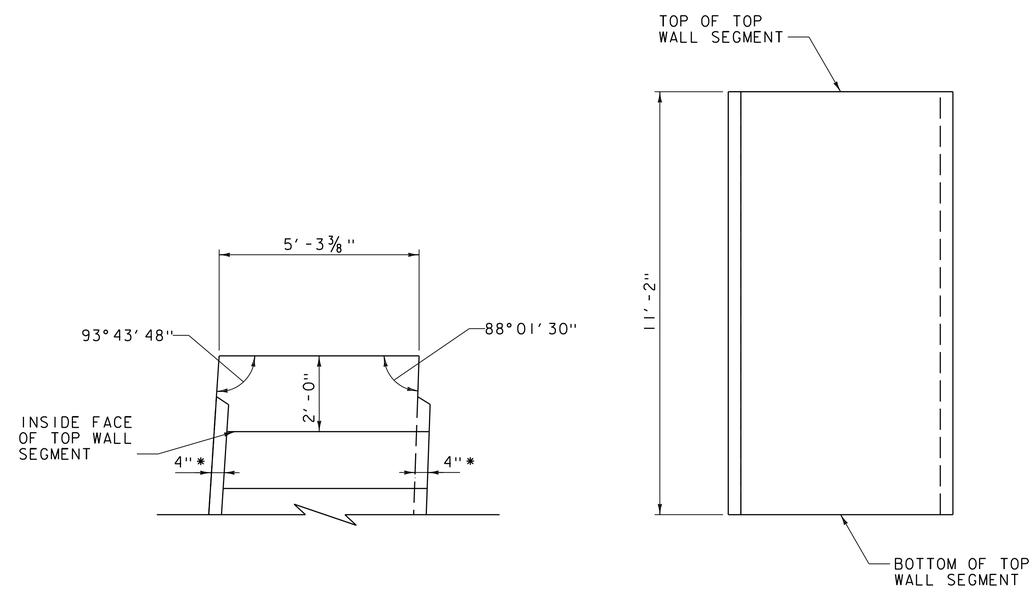

PLAN ELEVATION

UNIQUE TOP WALL SEGMENT PIECE DETAILS - TYPE FF

SCALE 1/2"=1'-0"

DIMENSION 'A' TABLE - TYPES CC, DD, & EE

UNIQUE TOP PIECE TYPE	DIMENSION 'A'
TOP PIECE TYPE CC	3'-8"
TOP PIECE TYPE DD	7'-8"
TOP PIECE TYPE EE	10'-2"

* DIMENSION PERPENDICULAR TO CENTERLINE OF JOINT

PROJECT NAME: MIDDLEBURY
PROJECT NUMBER: WCRS(23)

FILE NAME: zl3g542uwalldtl.dgn
PROJECT LEADER: A.P. GUYETTE
DESIGNED BY: R.H. BARNES
SOUTH U-WALL PIECE DETAILS (7 OF 9)

PLOT DATE: 4/30/2019
DRAWN BY: R.H. BARNES
CHECKED BY: K.C. BARRY
SHEET 196 OF 328

VHB 57603

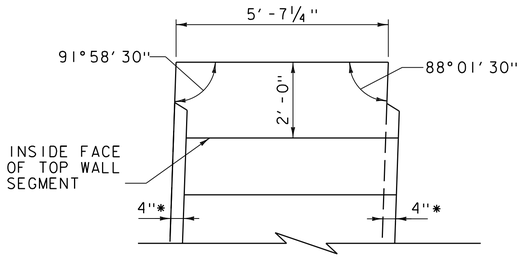

PLAN

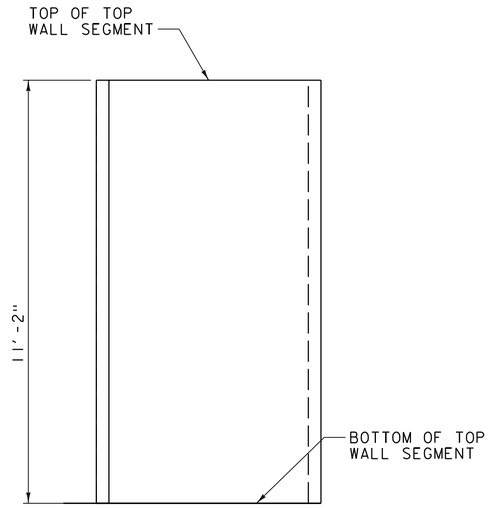

ELEVATION

UNIQUE TOP WALL SEGMENT PIECE DETAILS - TYPE GG

SCALE 1/2"=1'-0"

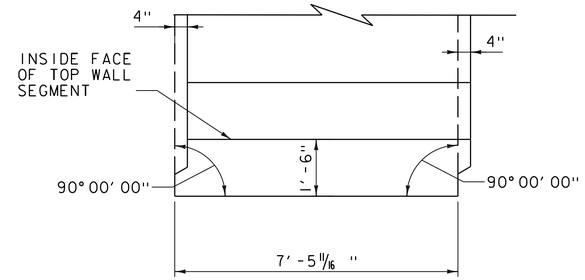

PLAN

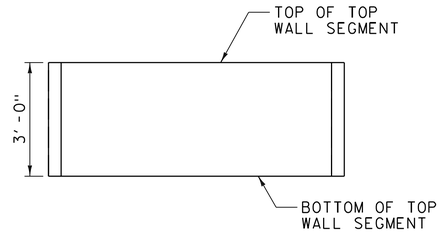

ELEVATION

UNIQUE TOP WALL SEGMENT PIECE DETAILS - TYPE HH

SCALE 1/2"=1'-0"

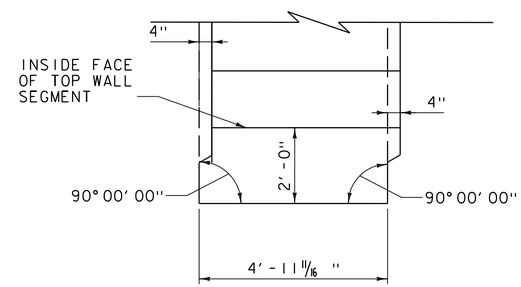

PLAN

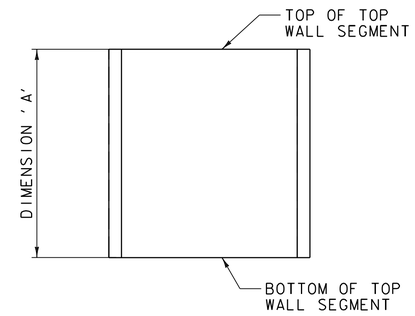

ELEVATION

UNIQUE TOP WALL SEGMENT PIECE DETAILS - TYPES KK, MM, NN & OO

SCALE 1/2"=1'-0"

DIMENSION 'A' TABLE - TYPES KK, MM, NN & OO

UNIQUE TOP PIECE TYPE	DIMENSION 'A'
TOP PIECE TYPE KK	5'-6"
TOP PIECE TYPE MM	9'-0"
TOP PIECE TYPE NN	11'-6"
TOP PIECE TYPE OO	14'-0"

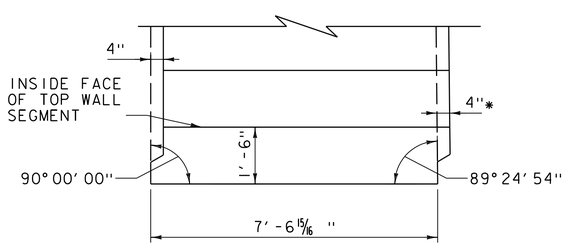

PLAN

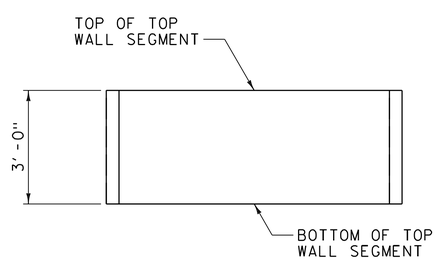

ELEVATION

UNIQUE TOP WALL SEGMENT PIECE DETAILS - TYPE II

SCALE 1/2"=1'-0"

* DIMENSION PERPENDICULAR TO CENTERLINE OF JOINT

PROJECT NAME: MIDDLEBURY	
PROJECT NUMBER: WCRS(23)	
FILE NAME: zl3g542uwalldtl.dgn	PLOT DATE: 4/30/2019
PROJECT LEADER: A.P. GUYETTE	DRAWN BY: R.H. BARNES
DESIGNED BY: R.H. BARNES	CHECKED BY: K.C. BARRY
SOUTH U-WALL PIECE DETAILS (8 OF 9)	SHEET 197 OF 328

VHB 57603

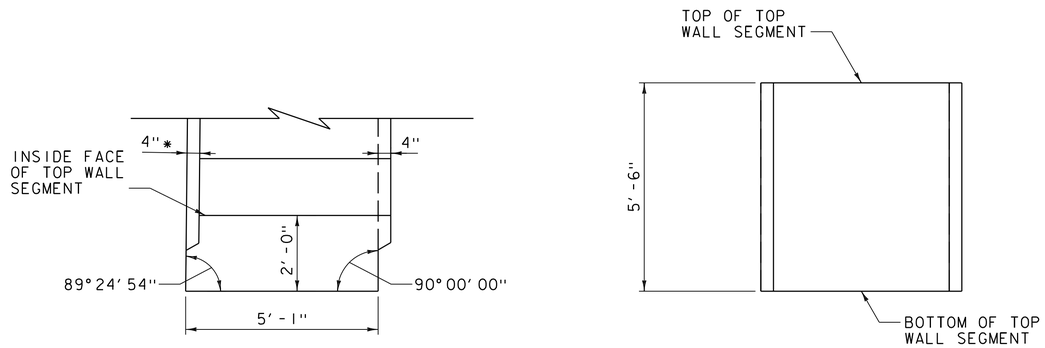

UNIQUE TOP WALL SEGMENT PIECE DETAILS - TYPE JJ

SCALE 1/2"=1'-0"

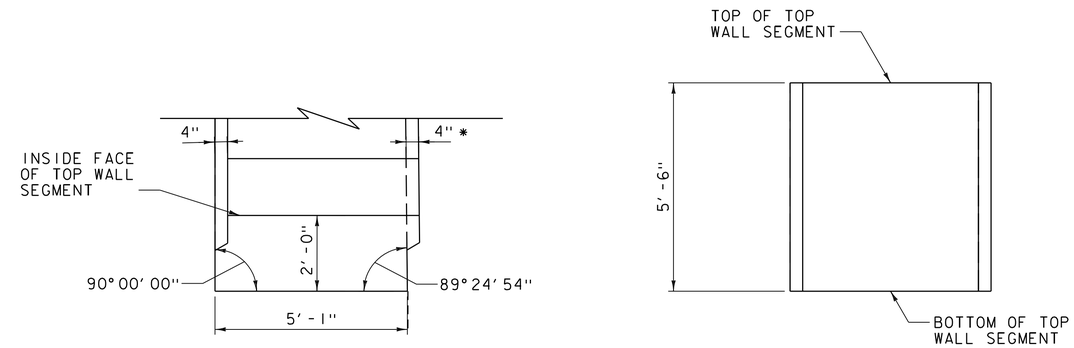

UNIQUE TOP WALL SEGMENT PIECE DETAILS - TYPE LL

SCALE 1/2"=1'-0"

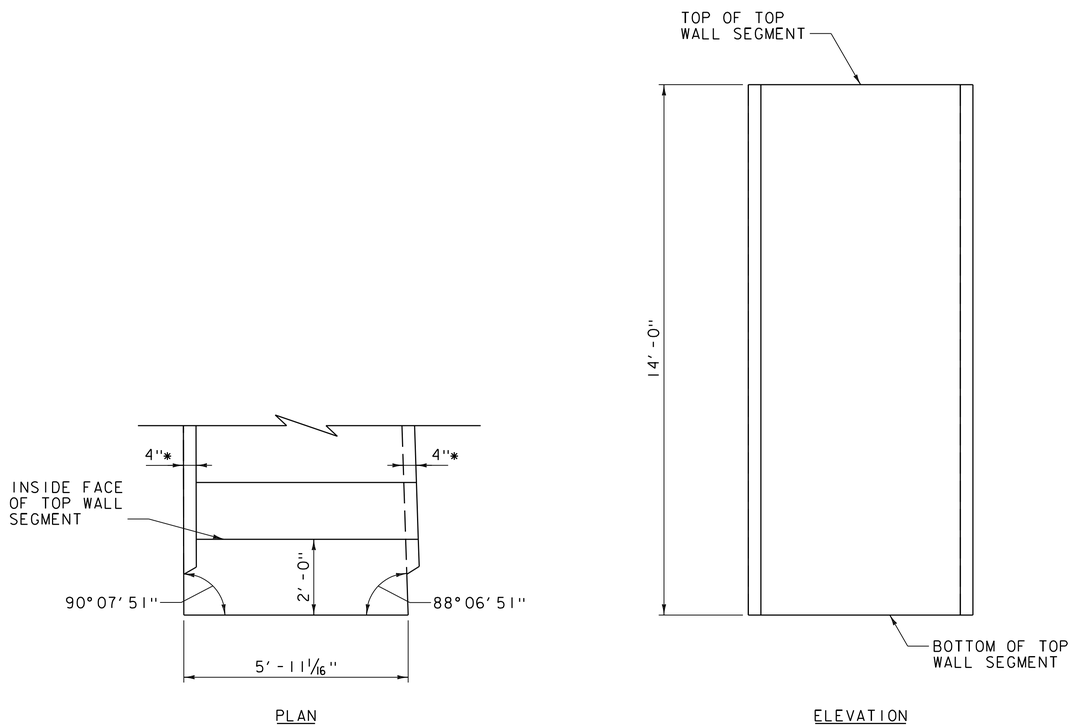

UNIQUE TOP WALL SEGMENT PIECE DETAILS - TYPE PP

SCALE 1/2"=1'-0"

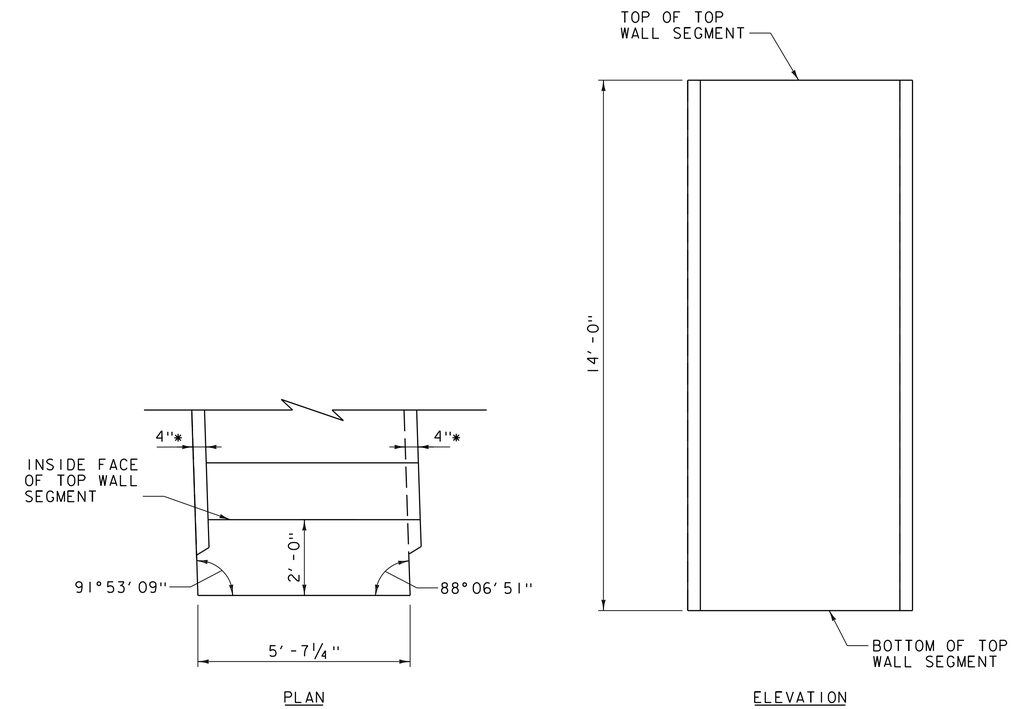

UNIQUE TOP WALL SEGMENT PIECE DETAILS - TYPE QQ

SCALE 1/2"=1'-0"

* DIMENSION PERPENDICULAR TO CENTERLINE OF JOINT

PROJECT NAME: MIDDLEBURY	
PROJECT NUMBER: WCRS(23)	
FILE NAME: zl3g542uwalldtl.dgn	PLOT DATE: 4/30/2019
PROJECT LEADER: A.P. GUYETTE	DRAWN BY: R.H. BARNES
DESIGNED BY: R.H. BARNES	CHECKED BY: K.C. BARRY
SOUTH U-WALL PIECE DETAILS (9 OF 9)	SHEET 198 OF 328

VHB 57603

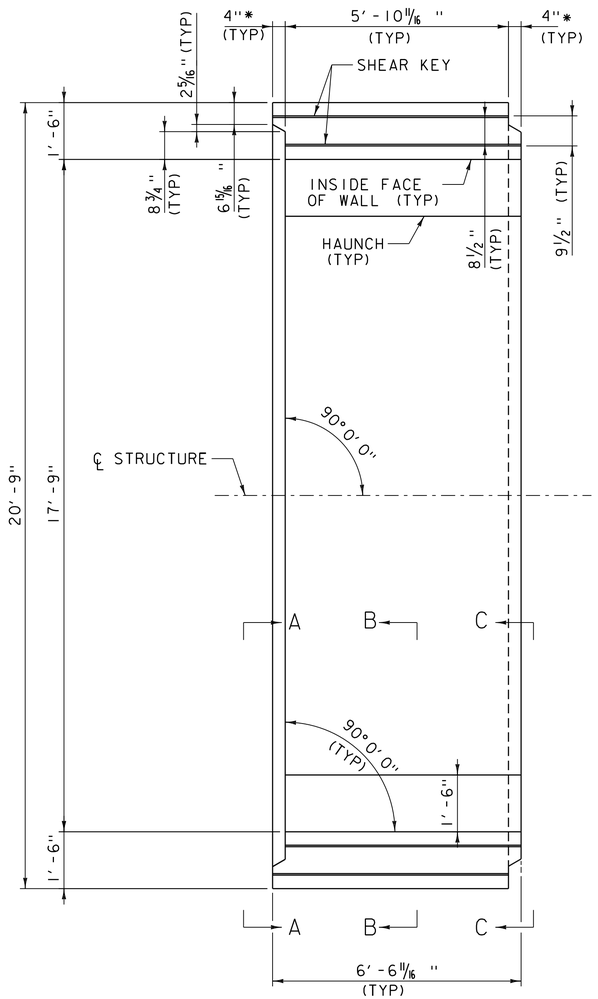

PLAN VIEW

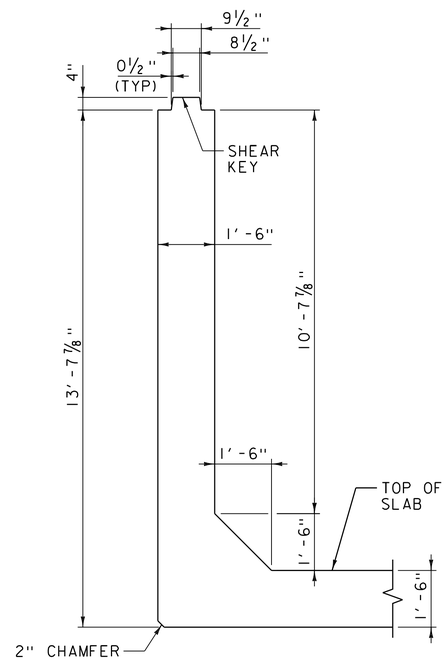

SECTION B-B

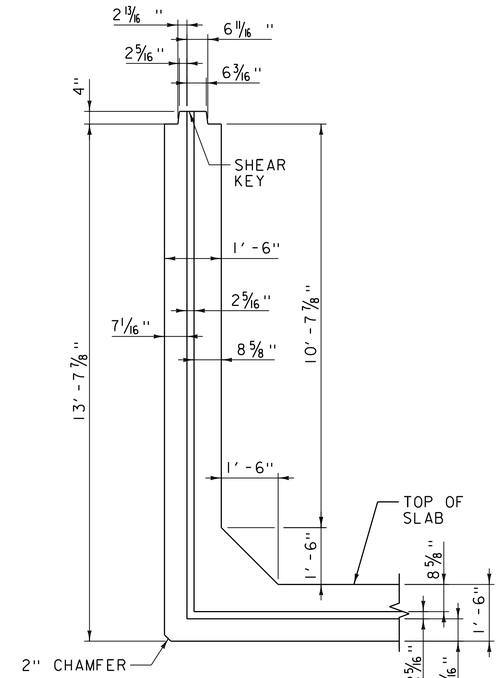

SECTION C-C

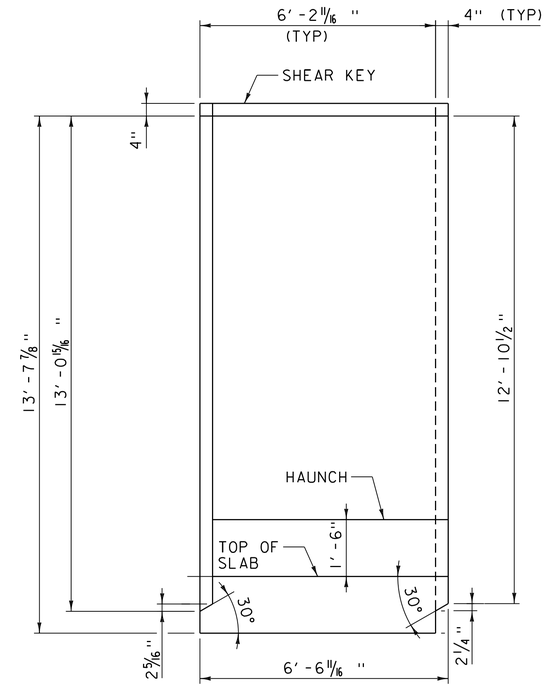

SECTION ALONG CENTERLINE OF STRUCTURE

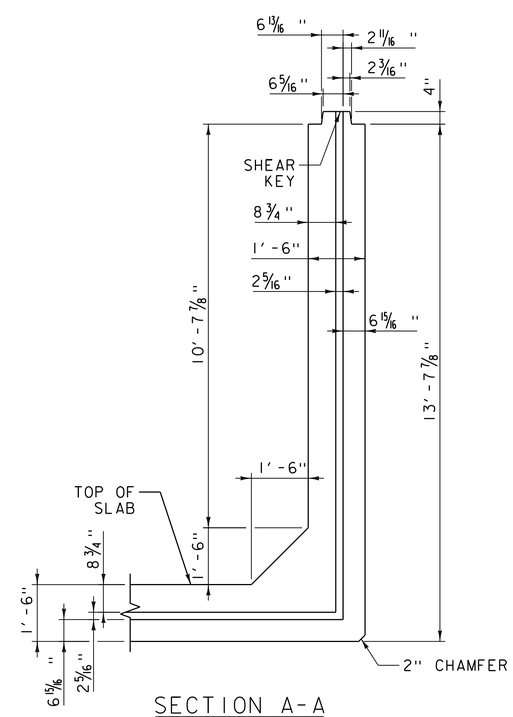

SECTION A-A

* DIMENSION MEASURED PERPENDICULAR TO CENTERLINE OF JOINT.

UNIQUE TUNNEL PIECE TYPE A

SCALE: 1/2" = 1'-0"

STATE OF VERMONT JEFFREY J. LONG NO. 91944 STRUCTURAL LICENSED PROFESSIONAL ENGINEER 4/30/2019

MOTT MACDONALD

vhb

PROJECT NAME: MIDDLEBURY	
PROJECT NUMBER: WCRS(23)	
FILE NAME: zl3g542tnldtl.dgn	PLOT DATE: 4/30/2019
PROJECT LEADER: A.P. GUYETTE	DRAWN BY: L.I.TONG
DESIGNED BY: L.I.TONG	CHECKED BY: J.A. PITTSINGER
TUNNEL PIECE DETAILS (1 OF 14)	SHEET 199 OF 328

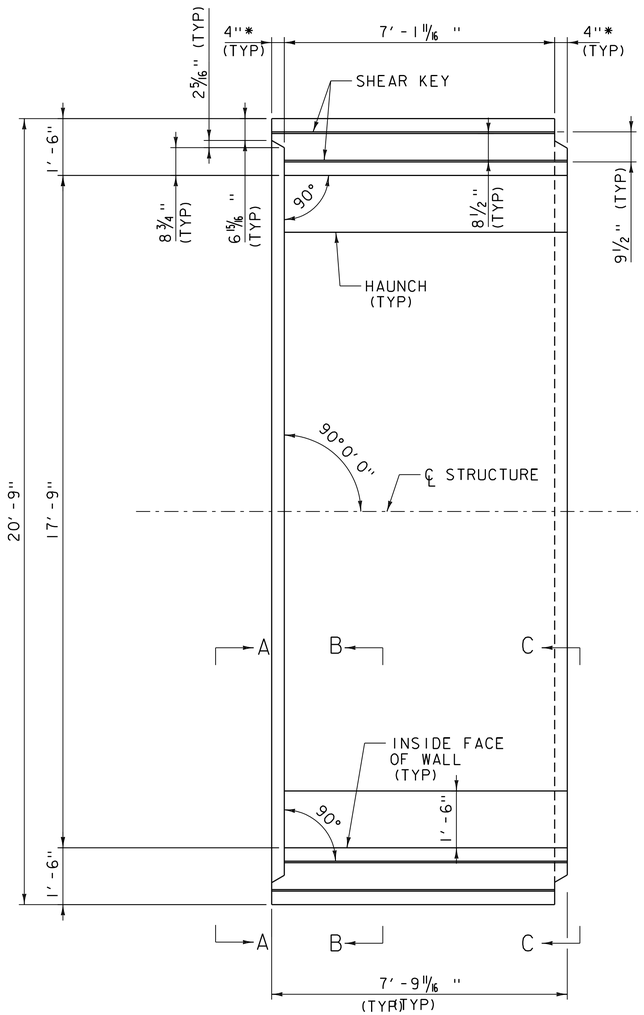

PLAN VIEW

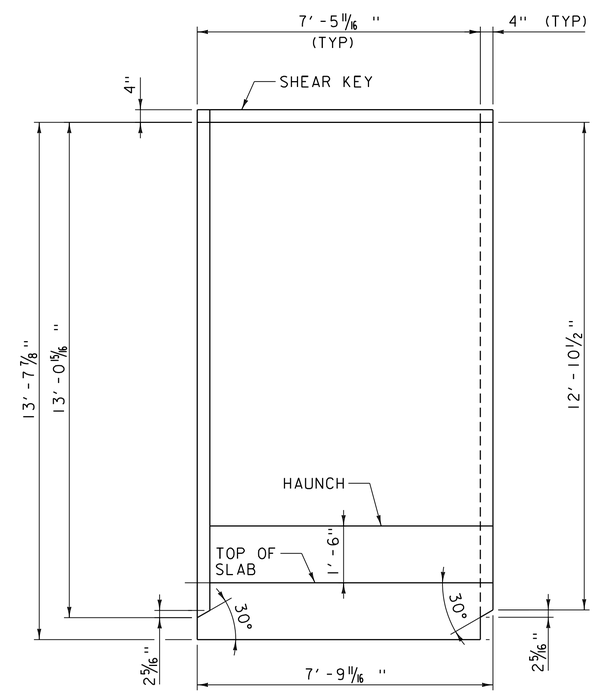

SECTION ALONG
CENTERLINE OF STRUCTURE

UNIQUE TUNNEL PIECE TYPE B

SCALE: 1/2" = 1'-0"

* DIMENSION MEASURED PERPENDICULAR TO CENTERLINE OF JOINT.

STATE OF VERMONT
JEFFREY J. LONG
NO. 91944
STRUCTURAL
LICENSED
PROFESSIONAL ENGINEER
4/30/2019

MOTT MACDONALD

vhb

PROJECT NAME: MIDDLEBURY	
PROJECT NUMBER: WCRS(23)	
FILE NAME: z13g542tnldtl.dgn	PLOT DATE: 4/30/2019
PROJECT LEADER: A.P. GUYETTE	DRAWN BY: L.I.TONG
DESIGNED BY: L.I.TONG	CHECKED BY: J.A. PITTSINGER
TUNNEL PIECE DETAILS (2 OF 14)	SHEET 200 OF 328

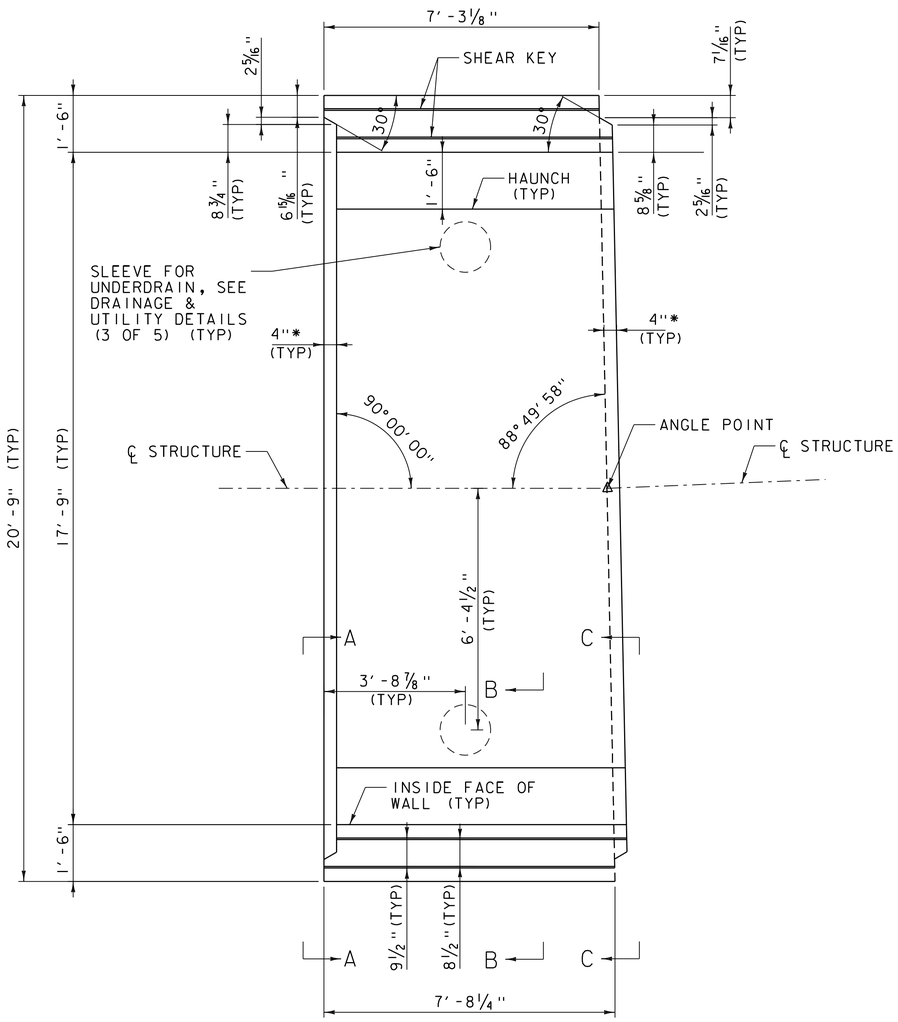

PLAN VIEW

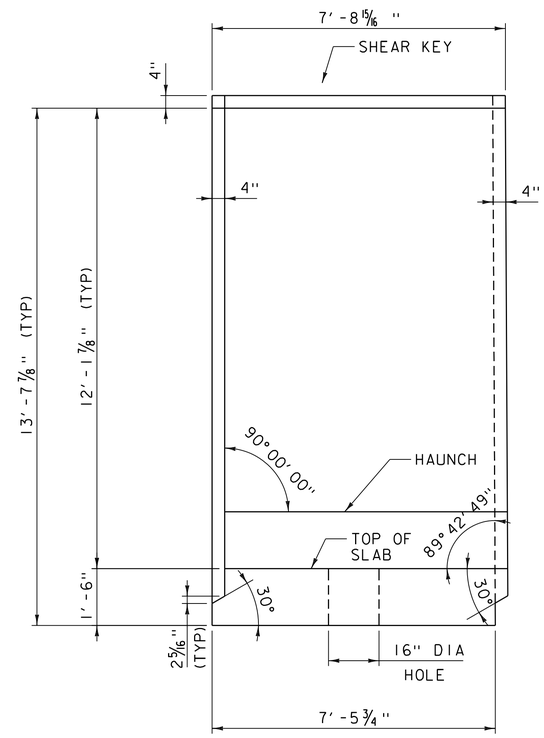

SECTION ALONG CENTERLINE OF STRUCTURE

* DIMENSION MEASURED PERPENDICULAR TO CENTERLINE OF JOINT.

UNIQUE TUNNEL PIECE TYPE C

SCALE: 1/2" = 1'-0"

STATE OF VERMONT JEFFREY J. LONG NO. 91944 STRUCTURAL LICENSED PROFESSIONAL ENGINEER 4/30/2019

MOTT MACDONALD

vhb

PROJECT NAME: MIDDLEBURY	
PROJECT NUMBER: WCRS(23)	
FILE NAME: zl3g542tnldtl.dgn	PLOT DATE: 4/30/2019
PROJECT LEADER: A.P. GUYETTE	DRAWN BY: L.J.TONG
DESIGNED BY: L.J.TONG	CHECKED BY: J.A. PITTSINGER
TUNNEL PIECE DETAILS (3 OF 14)	SHEET 201 OF 328

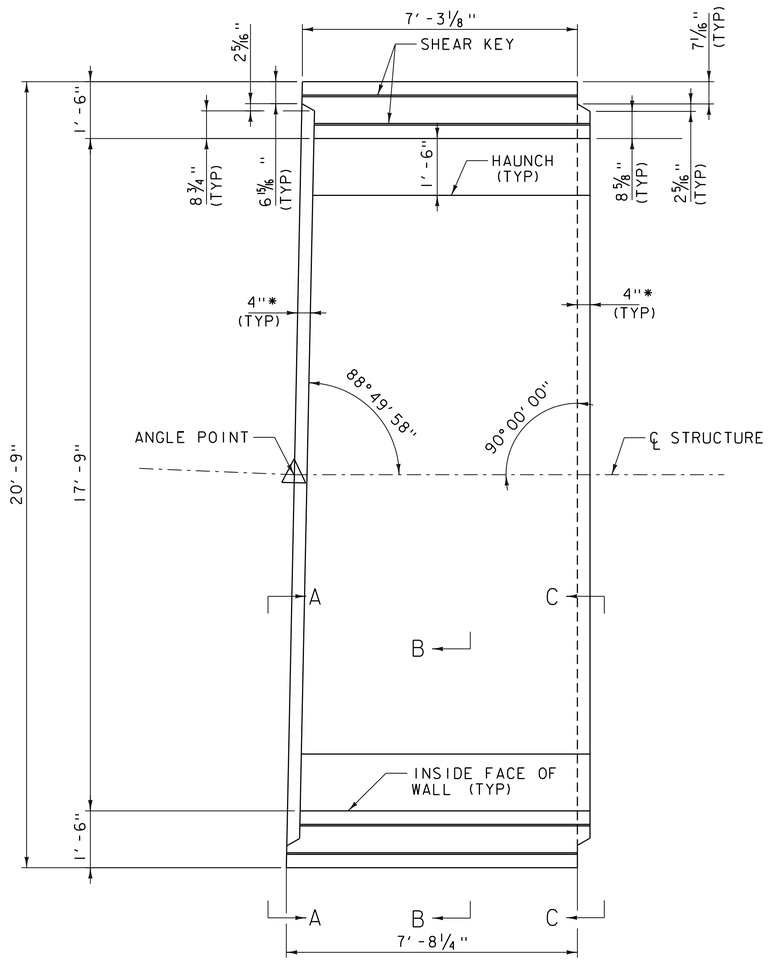

PLAN VIEW

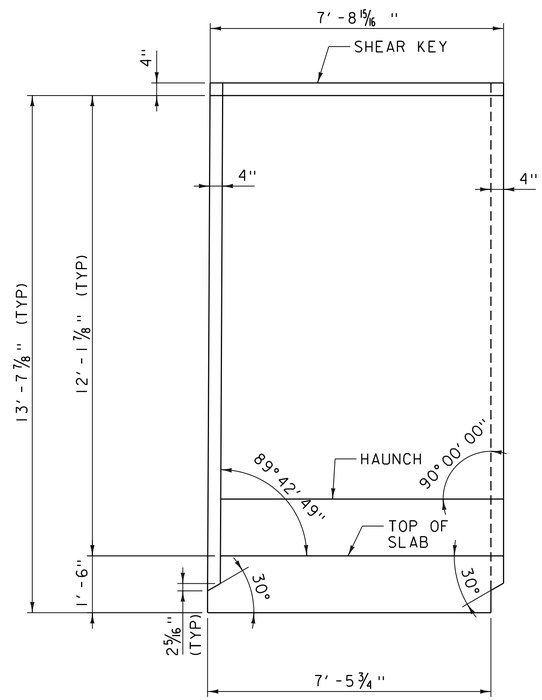

SECTION ALONG CENTERLINE OF STRUCTURE

* DIMENSION MEASURED PERPENDICULAR TO CENTERLINE OF JOINT.

UNIQUE TUNNEL PIECE TYPE D

SCALE: 1/2" = 1'-0"

STATE OF VERMONT JEFFREY J. LONG NO. 91944 STRUCTURAL LICENSED PROFESSIONAL ENGINEER 4/30/2019

MOTT MACDONALD

vhb

PROJECT NAME: MIDDLEBURY	
PROJECT NUMBER: WCRS(23)	
FILE NAME: zl3g542tnldtl.dgn	PLOT DATE: 4/30/2019
PROJECT LEADER: A.P. GUYETTE	DRAWN BY: L.J.TONG
DESIGNED BY: L.J.TONG	CHECKED BY: J.A. PITTSINGER
TUNNEL PIECE DETAILS (4 OF 14)	SHEET 202 OF 328

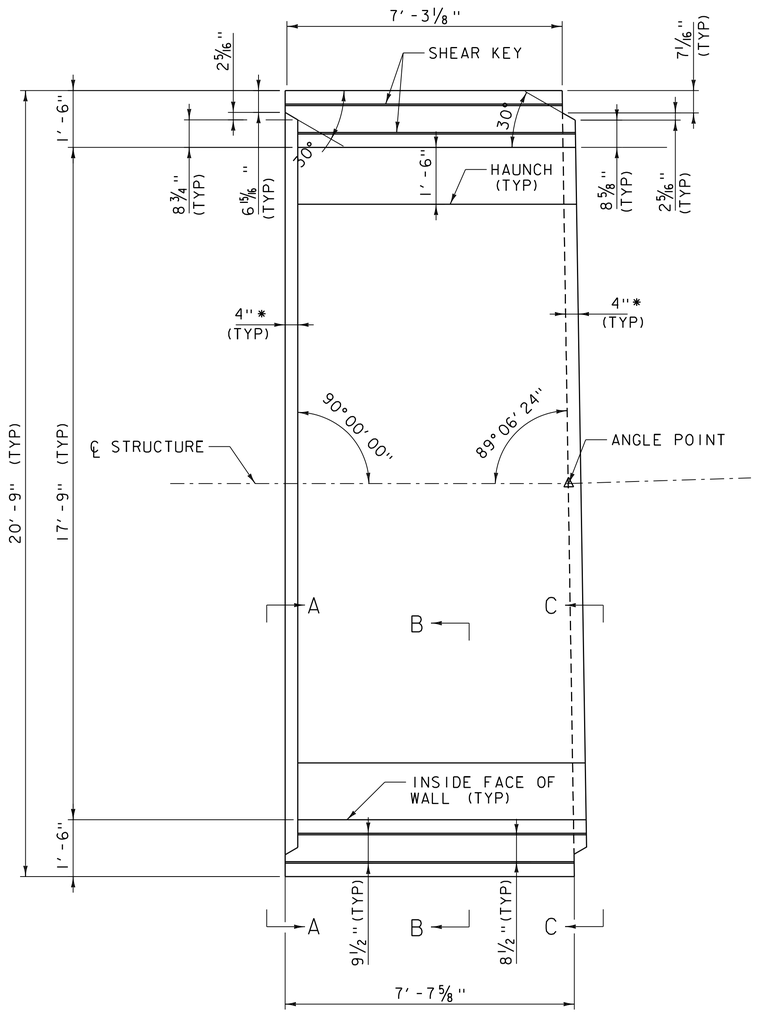

PLAN VIEW

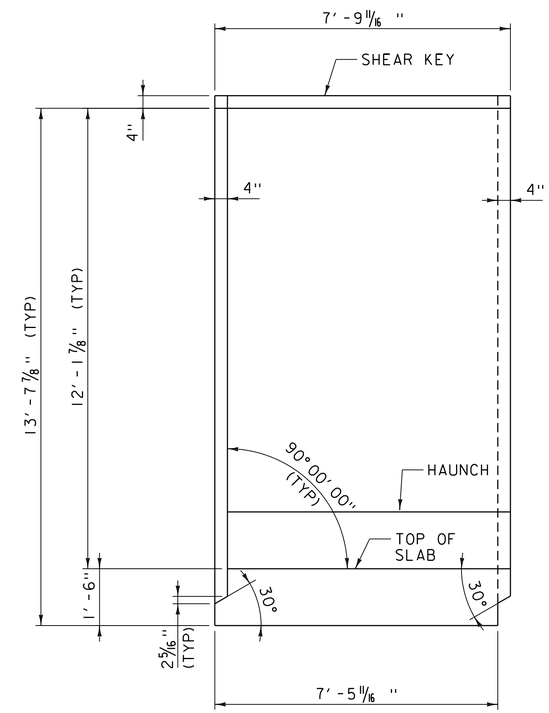

SECTION ALONG CENTERLINE OF STRUCTURE

* DIMENSION MEASURED PERPENDICULAR TO CENTERLINE OF JOINT.

UNIQUE TUNNEL PIECE TYPE E

SCALE: 1/2" = 1'-0"

STATE OF VERMONT JEFFREY J. LONG NO. 91944 STRUCTURAL LICENSED PROFESSIONAL ENGINEER 4/30/2019

MOTT MACDONALD

vhb

PROJECT NAME: MIDDLEBURY	
PROJECT NUMBER: WCRS(23)	
FILE NAME: zl3g542tnldtl.dgn	PLOT DATE: 4/30/2019
PROJECT LEADER: A.P. GUYETTE	DRAWN BY: L.J.TONG
DESIGNED BY: L.J.TONG	CHECKED BY: J.A. PITTSINGER
TUNNEL PIECE DETAILS (5 OF 14)	SHEET 203 OF 328

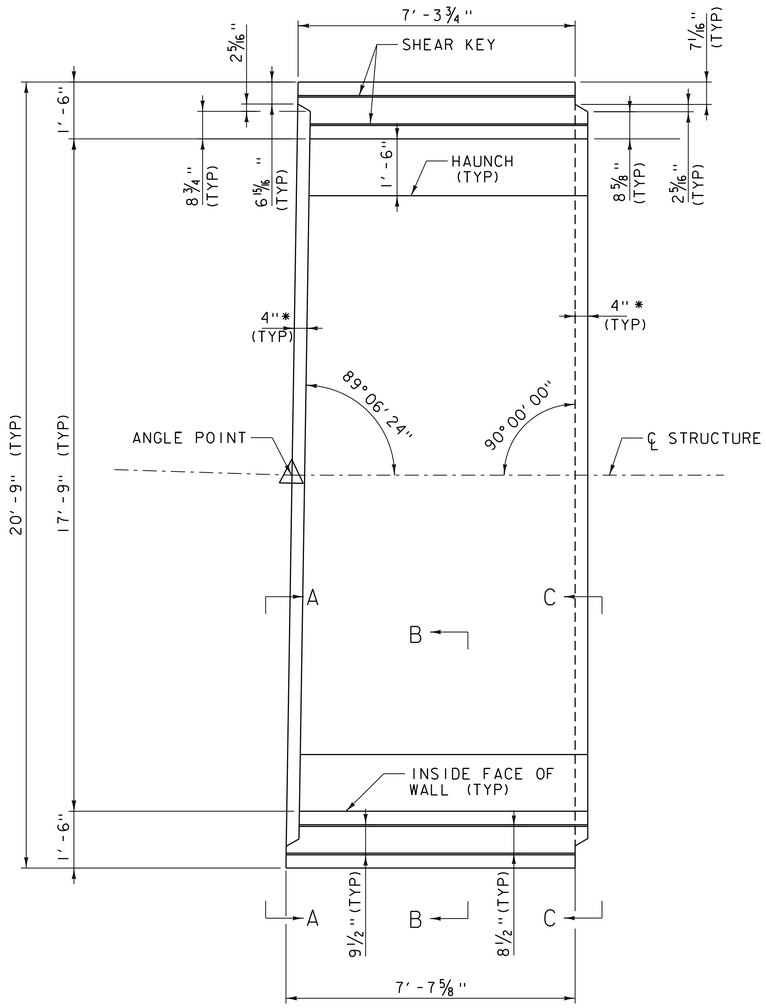

PLAN VIEW

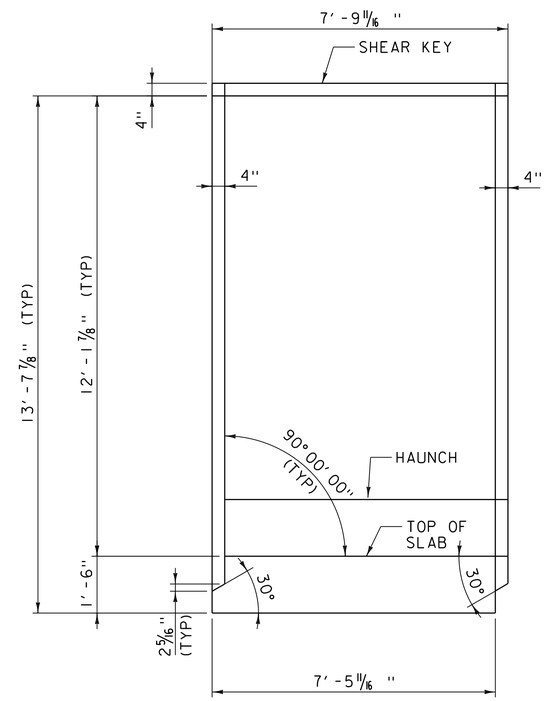

SECTION ALONG CENTERLINE OF STRUCTURE

* DIMENSION MEASURED PERPENDICULAR TO CENTERLINE OF JOINT.

UNIQUE TUNNEL PIECE TYPE F

SCALE: 1/2" = 1'-0"

STATE OF VERMONT JEFFREY J. LONG NO. 91944 STRUCTURAL LICENSED PROFESSIONAL ENGINEER 4/30/2019

MOTT MACDONALD

vhb

PROJECT NAME: MIDDLEBURY	
PROJECT NUMBER: WCRS(23)	
FILE NAME: zl3g542tnldtl.dgn	PLOT DATE: 4/30/2019
PROJECT LEADER: A.P. GUYETTE	DRAWN BY: L.J.TONG
DESIGNED BY: L.J.TONG	CHECKED BY: J.A. PITTSINGER
TUNNEL PIECE DETAILS (6 OF 14)	SHEET 204 OF 328

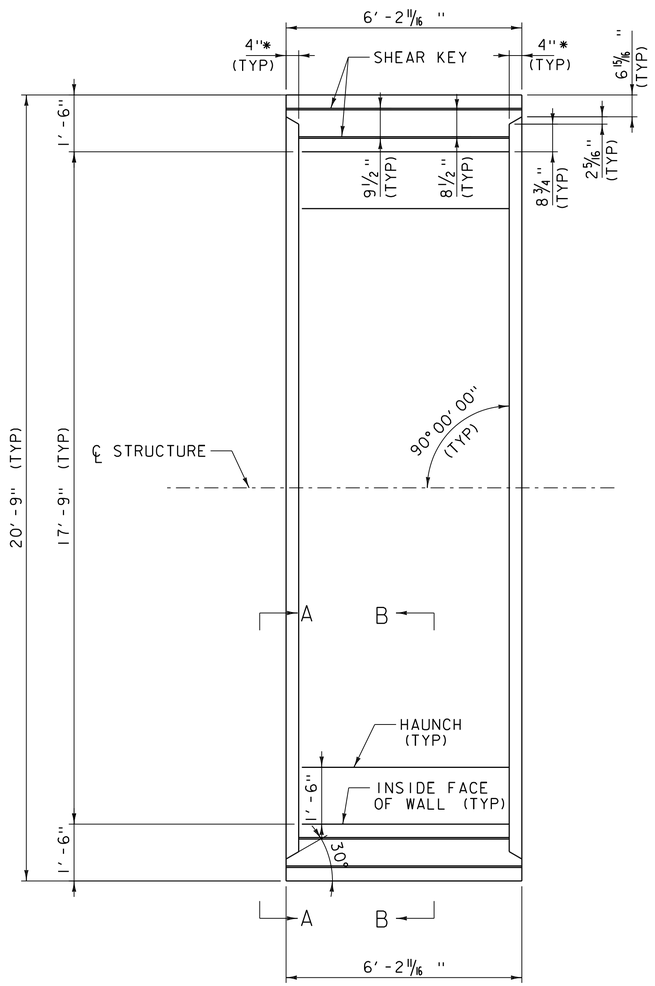

PLAN VIEW

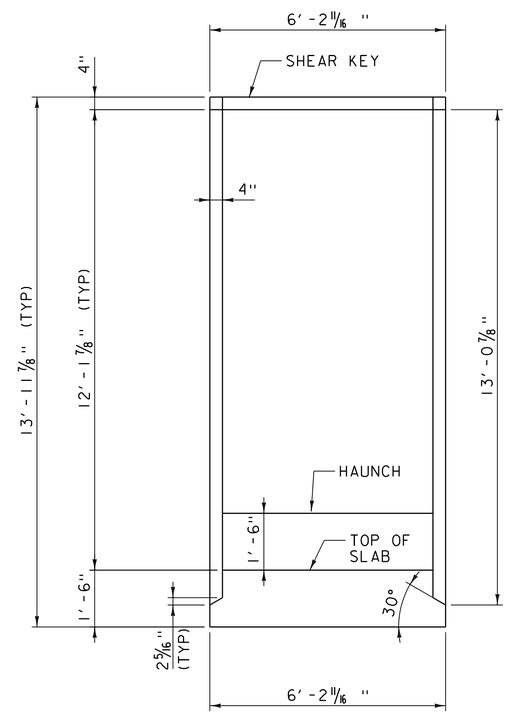

SECTION ALONG
CENTERLINE OF STRUCTURE

* DIMENSION MEASURED PERPENDICULAR TO CENTERLINE OF JOINT.

UNIQUE TUNNEL PIECE TYPE G

SCALE: 1/2" = 1'-0"

STATE OF VERMONT
JEFFREY J. LONG
NO. 91944
STRUCTURAL
LICENSED
PROFESSIONAL ENGINEER
4/30/2019

MOTT MACDONALD

vhb

PROJECT NAME: MIDDLEBURY	
PROJECT NUMBER: WCRS(23)	
FILE NAME: zl3g542tnldtl.dgn	PLOT DATE: 4/30/2019
PROJECT LEADER: A.P. GUYETTE	DRAWN BY: L.I.TONG
DESIGNED BY: L.I.TONG	CHECKED BY: J.A. PITTSINGER
TUNNEL PIECE DETAILS (7 OF 14)	SHEET 205 OF 328

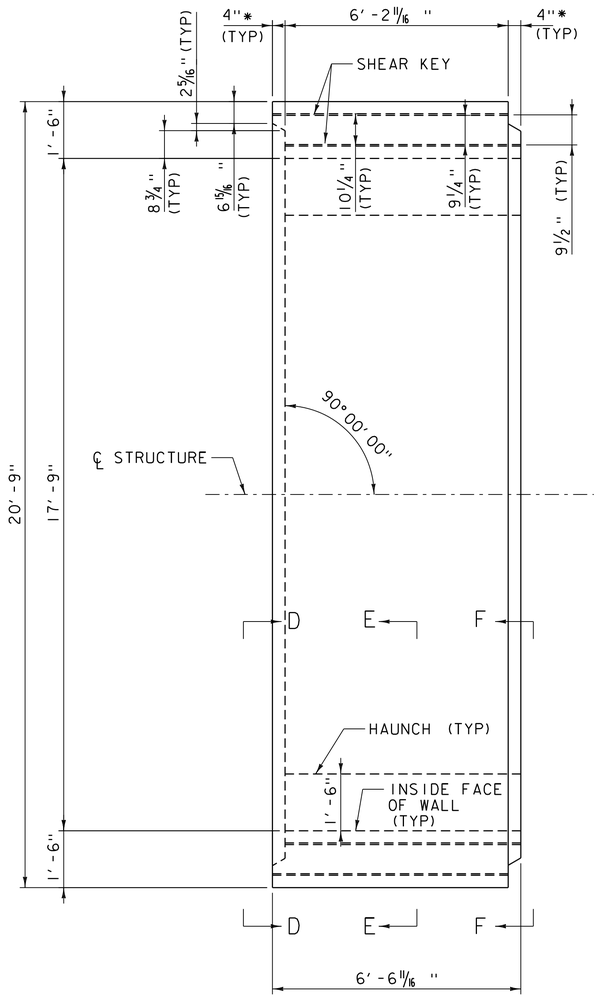

PLAN VIEW

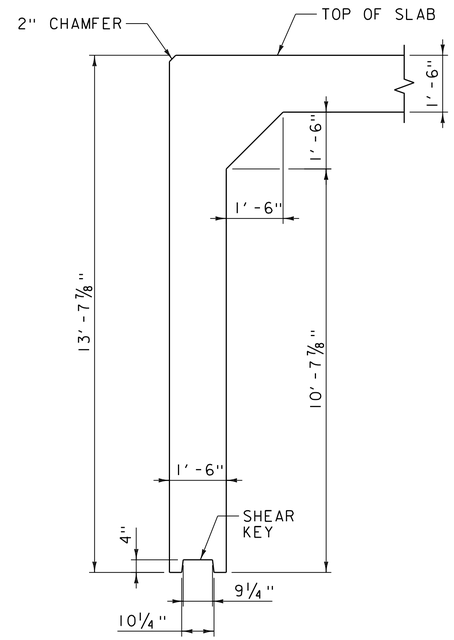

SECTION E-E

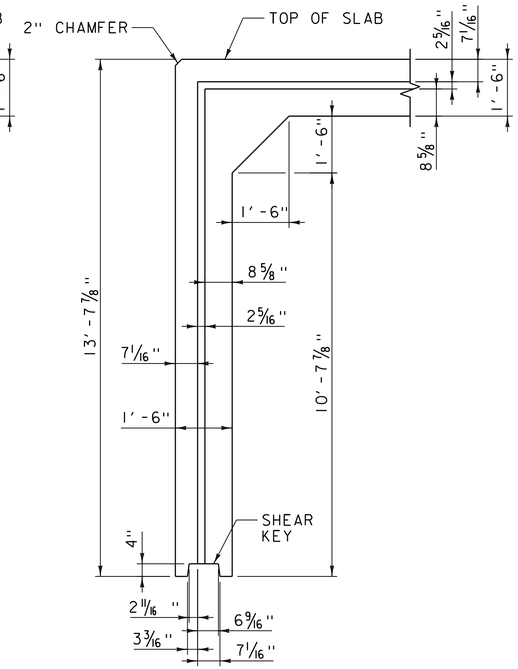

SECTION F-F

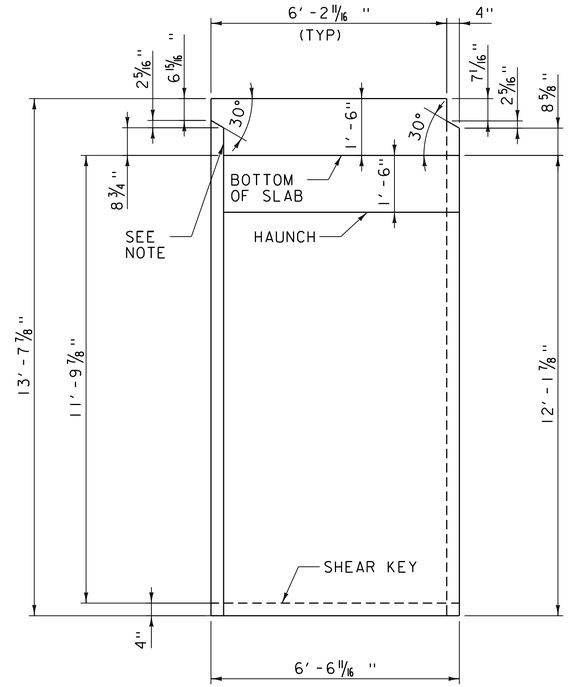

SECTION ALONG CENTERLINE OF STRUCTURE

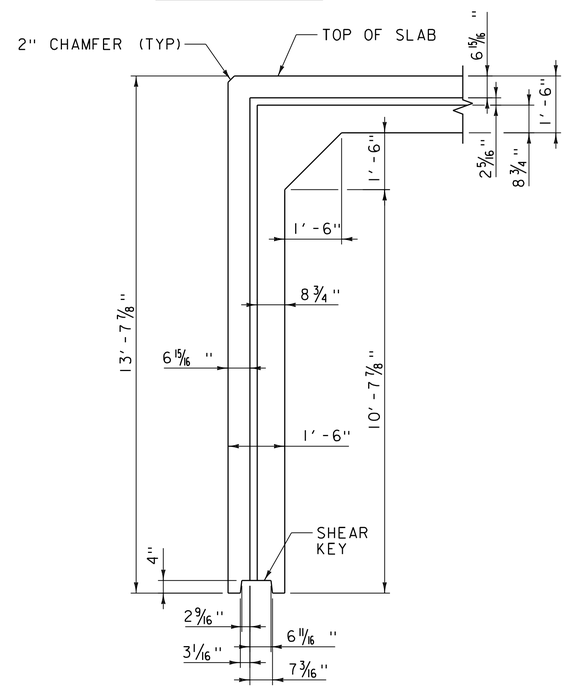

SECTION D-D

UNIQUE TUNNEL PIECE TYPE H

SCALE: 1/2" = 1'-0"

NOTE: TP-48 SHALL NOT HAVE A SHEAR KEY IN THE TOP SLAB AT FASCIA.

* DIMENSION MEASURED PERPENDICULAR TO CENTERLINE OF JOINT.

STATE OF VERMONT
JEFFREY J. LONG
NO. 91944
STRUCTURAL
LICENSED PROFESSIONAL ENGINEER
4/30/2019

MOTT MACDONALD

vhb

PROJECT NAME: MIDDLEBURY	
PROJECT NUMBER: WCRS(23)	
FILE NAME: zl3g542tnldtl.dgn	PLOT DATE: 4/30/2019
PROJECT LEADER: A.P. GUYETTE	DRAWN BY: L.I.TONG
DESIGNED BY: L.I.TONG	CHECKED BY: J.A. PITTSINGER
TUNNEL PIECE DETAILS (8 OF 14)	SHEET 206 OF 328

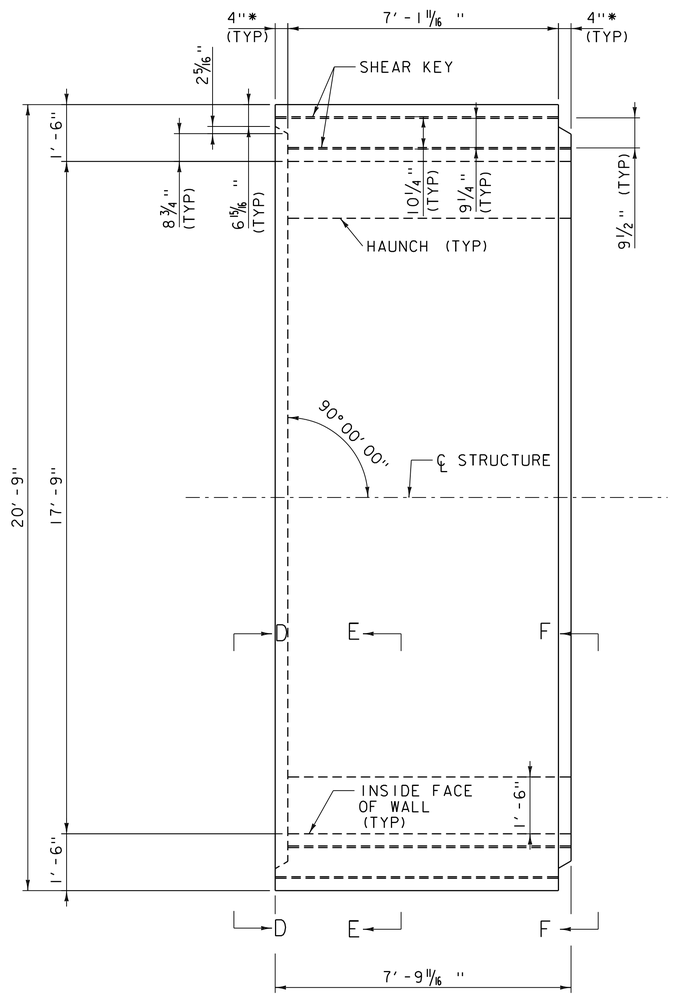

PLAN VIEW

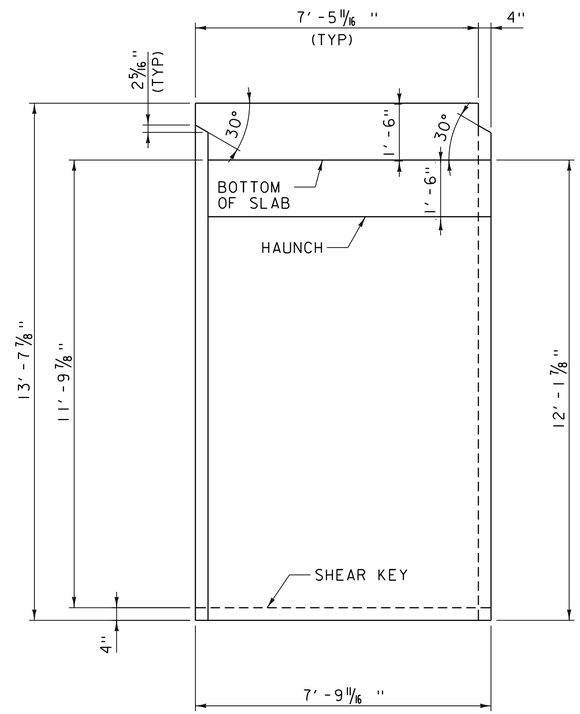

SECTION ALONG
CENTERLINE OF STRUCTURE

UNIQUE TUNNEL PIECE TYPE 1

SCALE: 1/2" = 1'-0"

* DIMENSION MEASURED PERPENDICULAR TO CENTERLINE OF JOINT.

STATE OF VERMONT
JEFFREY J. LONG
NO. 91944
STRUCTURAL
LICENSED
PROFESSIONAL ENGINEER
4/30/2019

MOTT MACDONALD

vhb

PROJECT NAME: MIDDLEBURY	
PROJECT NUMBER: WCRS(23)	
FILE NAME: zl3g542tnldt1.dgn	PLOT DATE: 4/30/2019
PROJECT LEADER: A.P. GUYETTE	DRAWN BY: L.I.TONG
DESIGNED BY: L.I.TONG	CHECKED BY: J.A. PITTSINGER
TUNNEL PIECE DETAILS (9 OF 14)	SHEET 207 OF 328

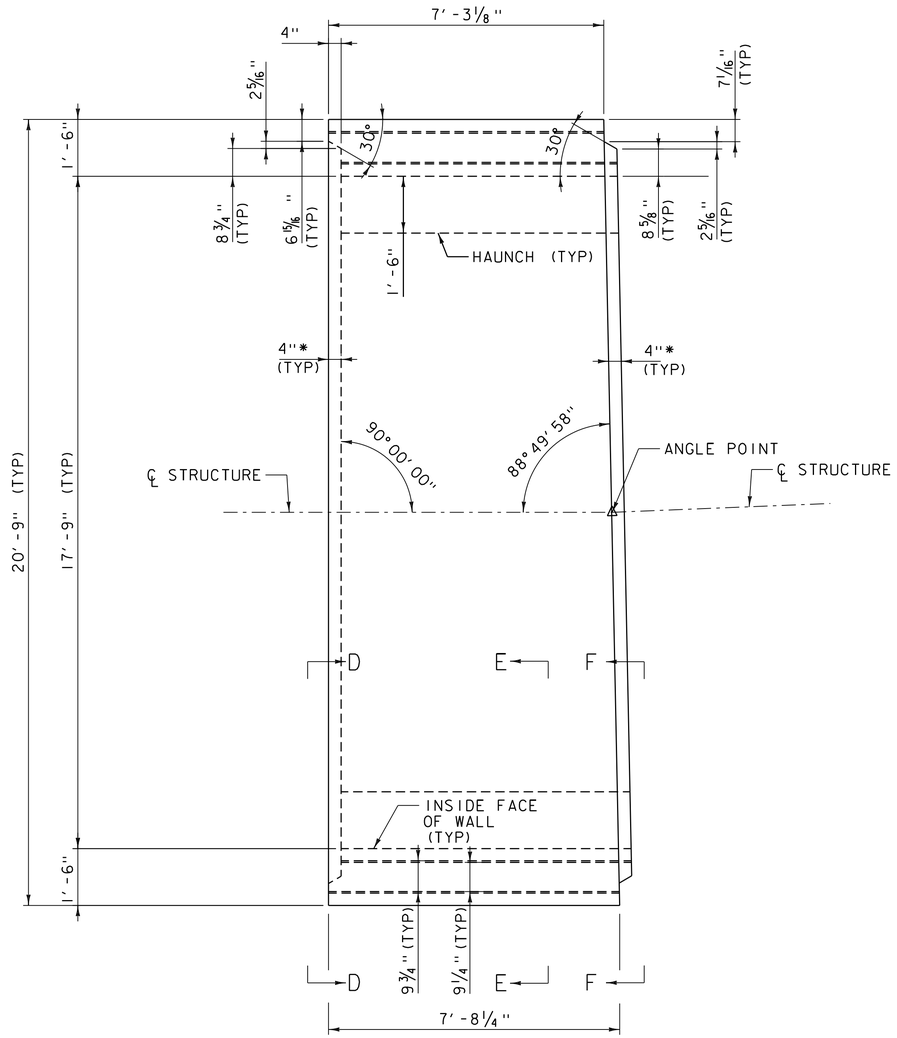

PLAN VIEW

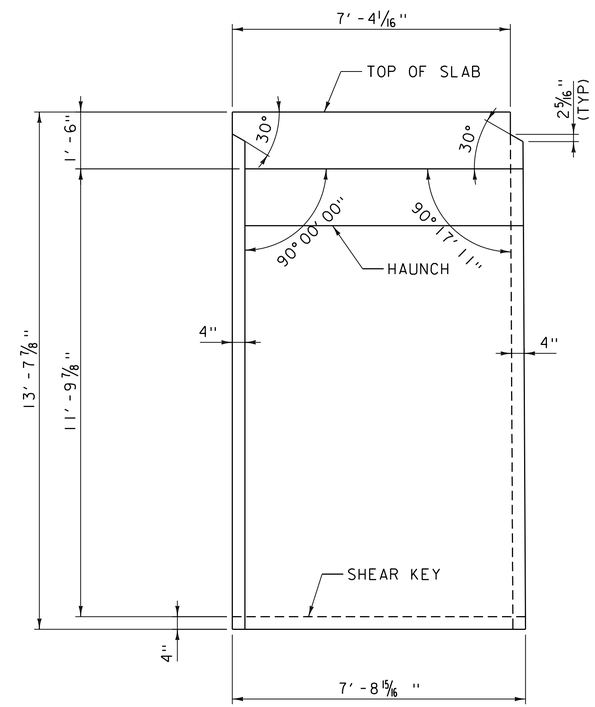

SECTION ALONG CENTERLINE OF STRUCTURE

UNIQUE TUNNEL PIECE TYPE J

SCALE: 1/2" = 1'-0"

* DIMENSION MEASURED PERPENDICULAR TO CENTERLINE OF JOINT.

STATE OF VERMONT JEFFREY J. LONG NO. 91944 STRUCTURAL LICENSED PROFESSIONAL ENGINEER
4/30/2019

MOTT MACDONALD

vhb

PROJECT NAME: MIDDLEBURY	
PROJECT NUMBER: WCRS(23)	
FILE NAME: zl3g542tnldtl.dgn	PLOT DATE: 4/30/2019
PROJECT LEADER: A.P. GUYETTE	DRAWN BY: L.I.TONG
DESIGNED BY: L.I.TONG	CHECKED BY: J.A. PITTSINGER
TUNNEL PIECE DETAILS (10 OF 14)	SHEET 208 OF 328

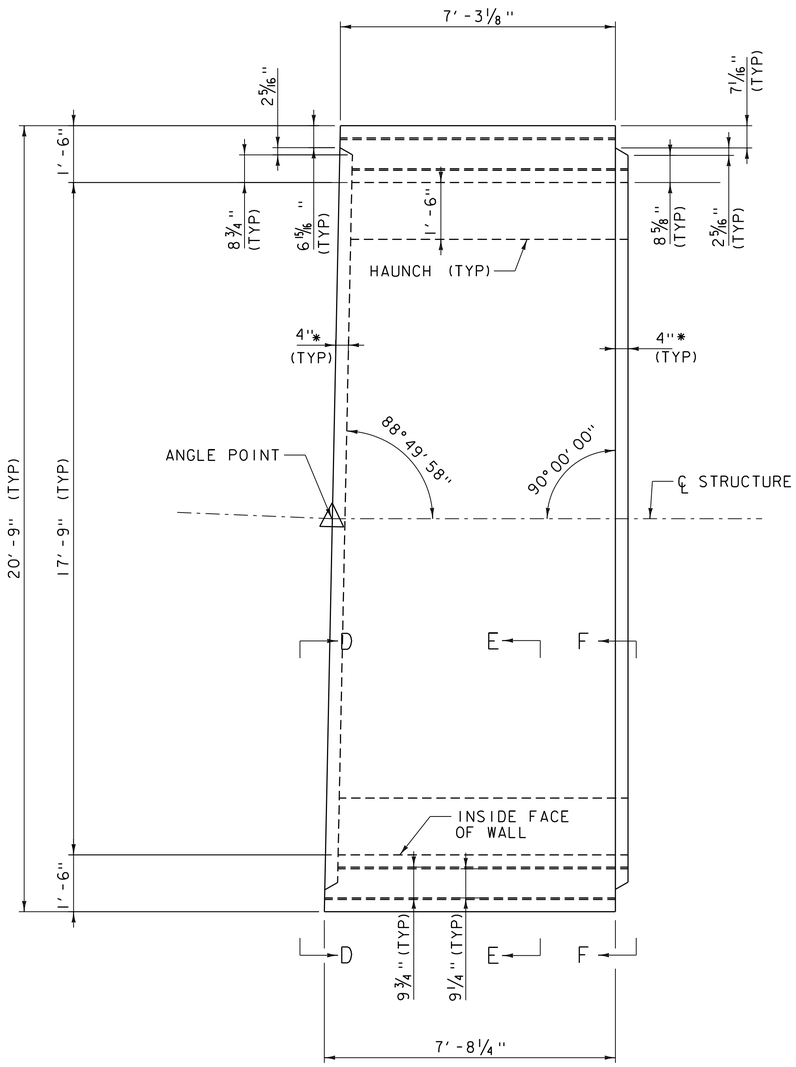

PLAN VIEW

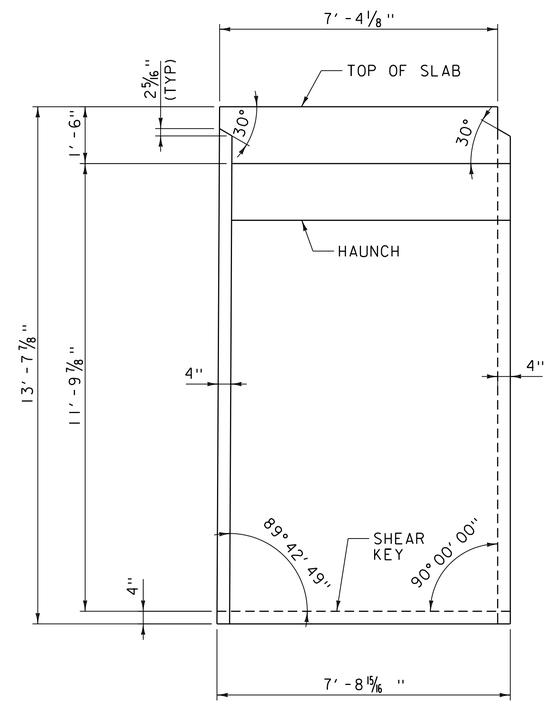

SECTION ALONG CENTERLINE OF STRUCTURE

UNIQUE TUNNEL PIECE TYPE K

SCALE: 1/2" = 1'-0"

* DIMENSION MEASURED PERPENDICULAR TO CENTERLINE OF JOINT.

STATE OF VERMONT JEFFREY J. LONG NO. 91944 STRUCTURAL LICENSED PROFESSIONAL ENGINEER 4/30/2019

MOTT MACDONALD

vhb

PROJECT NAME: MIDDLEBURY	
PROJECT NUMBER: WCRS(23)	
FILE NAME: z13g542tnldtl.dgn	PLOT DATE: 4/30/2019
PROJECT LEADER: A.P. GUYETTE	DRAWN BY: L.I.TONG
DESIGNED BY: L.I.TONG	CHECKED BY: J.A. PITTSINGER
TUNNEL PIECE DETAILS (11 OF 14)	SHEET 209 OF 328

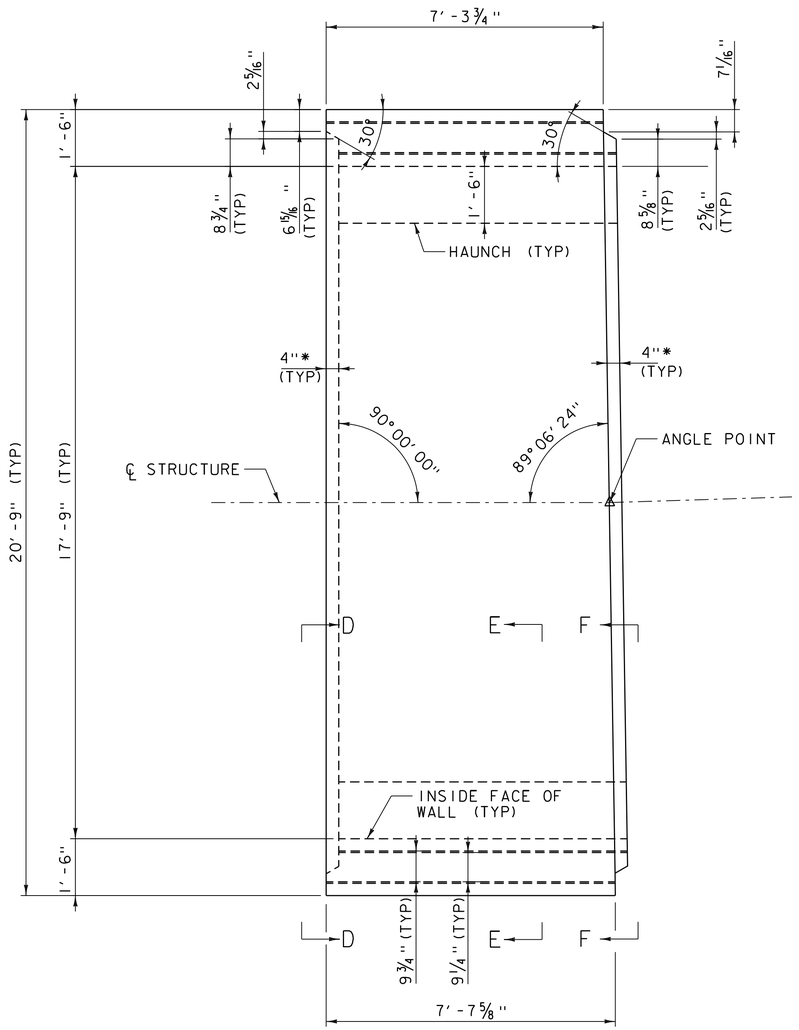

PLAN VIEW

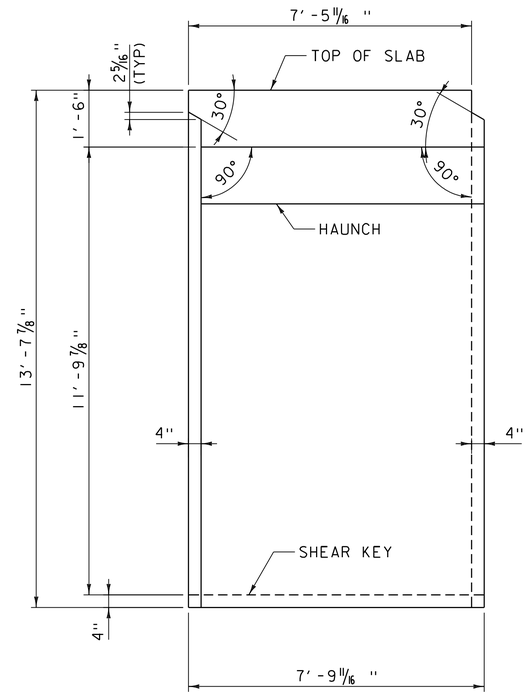

SECTION ALONG
CENTERLINE OF STRUCTURE

UNIQUE TUNNEL PIECE TYPE L

SCALE: 1/2" = 1'-0"

* DIMENSION MEASURED PERPENDICULAR TO CENTERLINE OF JOINT.

STATE OF VERMONT
JEFFREY J. LONGE
NO. 91944
STRUCTURAL
LICENSED PROFESSIONAL ENGINEER
4/30/2019

MOTT MACDONALD

vhb

PROJECT NAME: MIDDLEBURY	
PROJECT NUMBER: WCRS(23)	
FILE NAME: zl3g542tnldtl.dgn	PLOT DATE: 4/30/2019
PROJECT LEADER: A.P. GUYETTE	DRAWN BY: L.I.TONG
DESIGNED BY: L.I.TONG	CHECKED BY: J.A. PITTSINGER
TUNNEL PIECE DETAILS (12 OF 14)	SHEET 210 OF 328

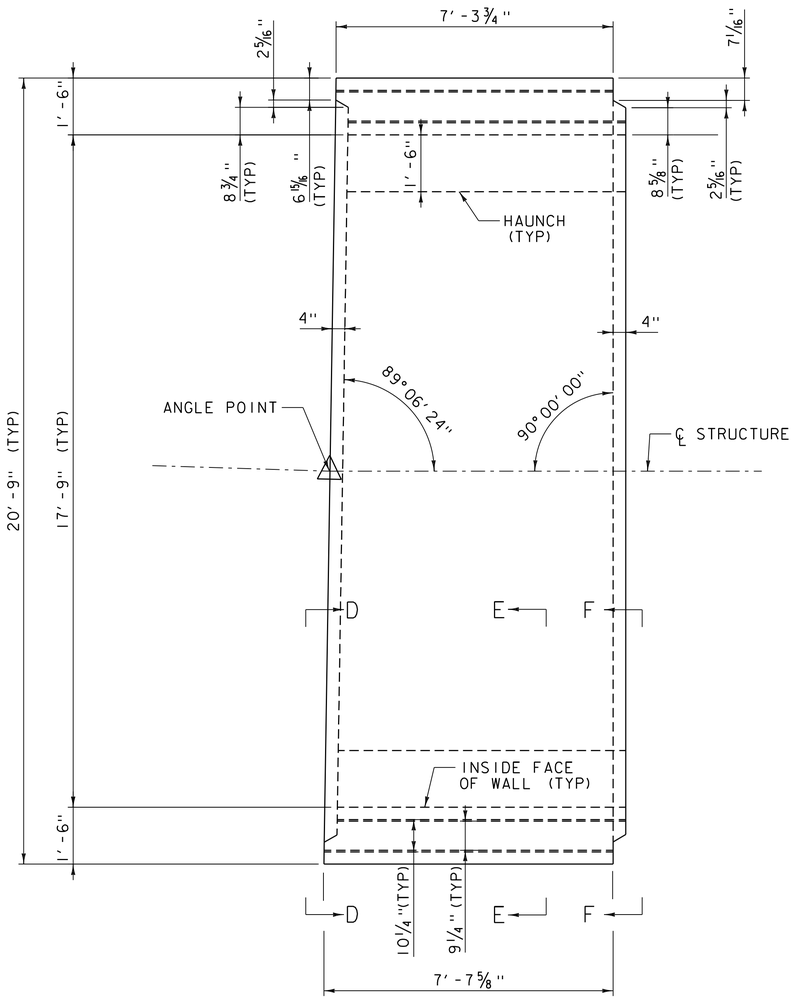

PLAN VIEW

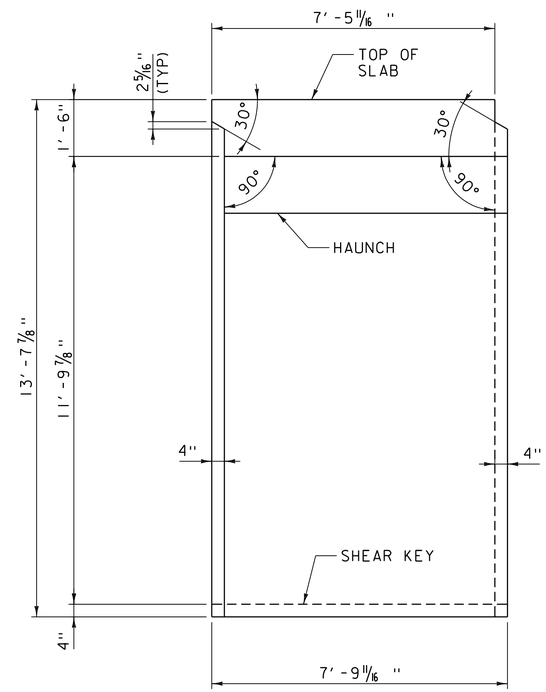

SECTION ALONG CENTERLINE OF STRUCTURE

UNIQUE TUNNEL PIECE TYPE M

SCALE: 1/2" = 1'-0"

* DIMENSION MEASURED PERPENDICULAR TO CENTERLINE OF JOINT.

STATE OF VERMONT JEFFREY J. LONG NO. 91944 STRUCTURAL LICENSED PROFESSIONAL ENGINEER 4/30/2019

MOTT MACDONALD

vhb

PROJECT NAME: MIDDLEBURY	
PROJECT NUMBER: WCRS(23)	
FILE NAME: zl3g542tnldtl.dgn	PLOT DATE: 4/30/2019
PROJECT LEADER: A.P. GUYETTE	DRAWN BY: L.J.TONG
DESIGNED BY: L.J.TONG	CHECKED BY: J.A. PITTSINGER
TUNNEL PIECE DETAILS (13 OF 14)	SHEET 211 OF 328

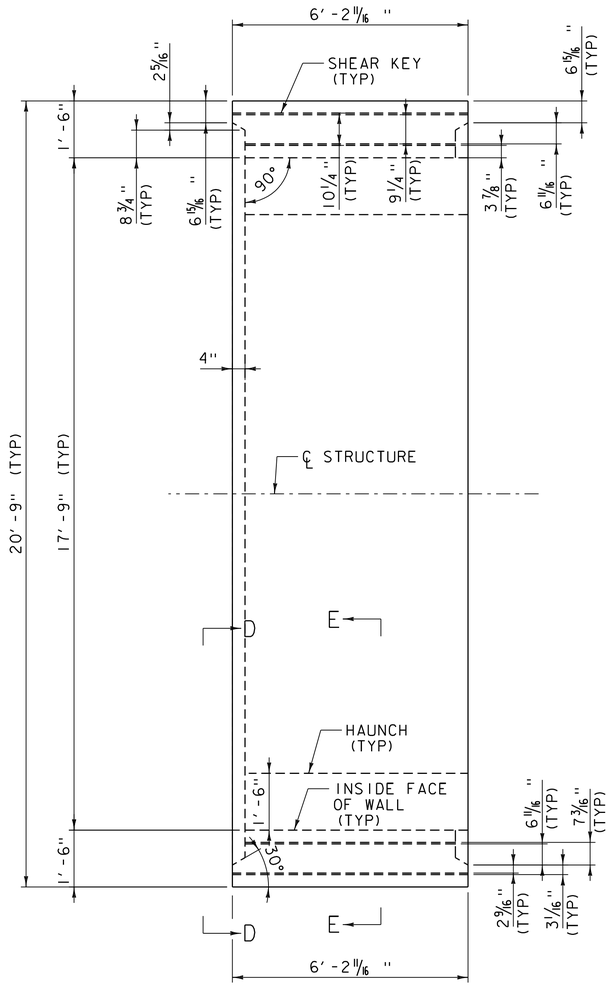

PLAN VIEW

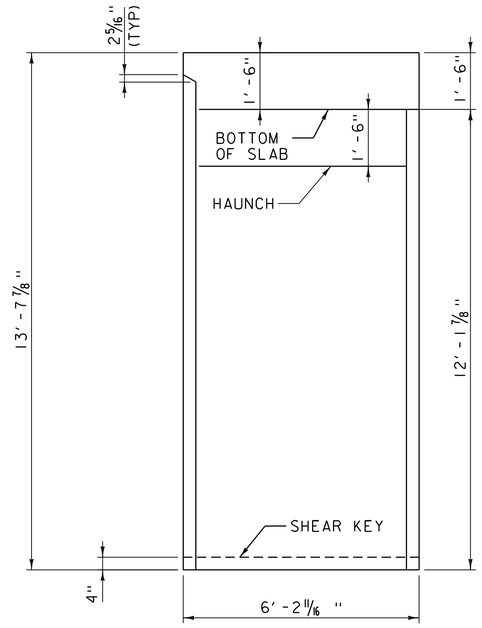

SECTION ALONG CENTERLINE OF STRUCTURE

UNIQUE TUNNEL PIECE TYPE N

SCALE: 1/2" = 1'-0"

* DIMENSION MEASURED PERPENDICULAR TO CENTERLINE OF JOINT.

STATE OF VERMONT JEFFREY J. LONGO NO. 91944 STRUCTURAL LICENSED PROFESSIONAL ENGINEER 4/30/2019

MOTT MACDONALD

vhb

PROJECT NAME: MIDDLEBURY	
PROJECT NUMBER: WCRS(23)	
FILE NAME: zl3g542tnldtl.dgn	PLOT DATE: 4/30/2019
PROJECT LEADER: A.P. GUYETTE	DRAWN BY: L.J.TONG
DESIGNED BY: L.J.TONG	CHECKED BY: J.A. PITTSINGER
TUNNEL PIECE DETAILS (14 OF 14)	SHEET 212 OF 328

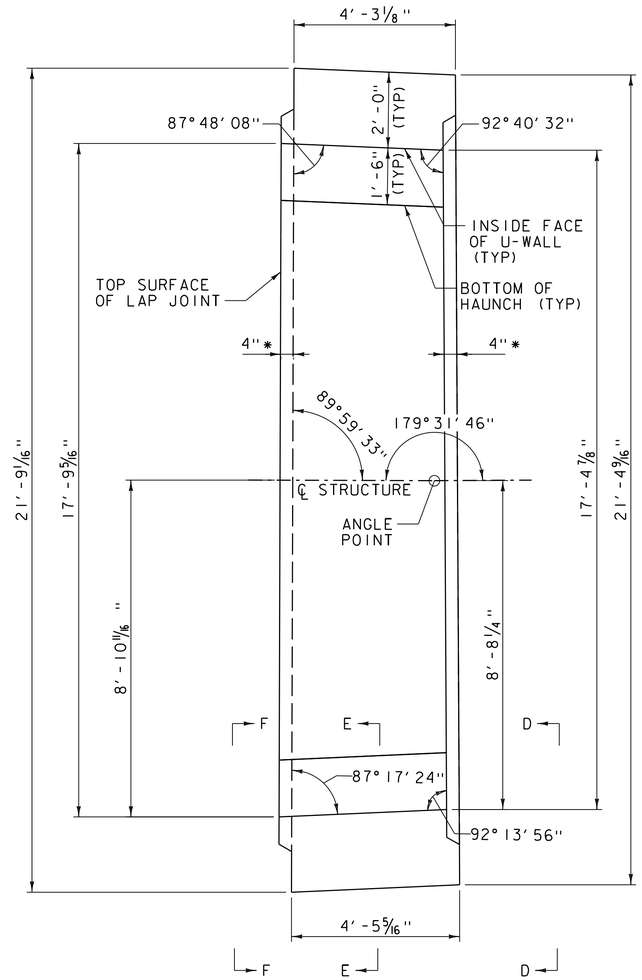

PLAN

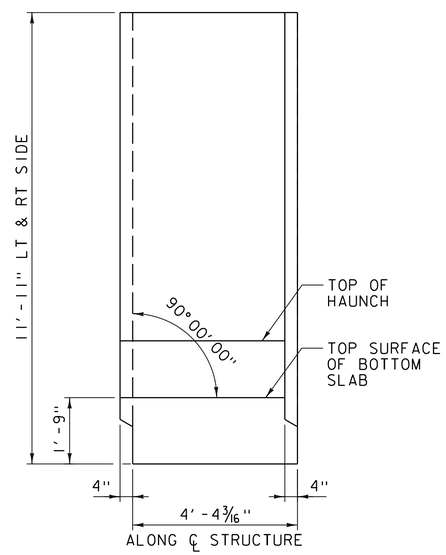

SECTION ALONG CENTERLINE STRUCTURE

UNIQUE U-WALL PIECE DETAILS - TYPE A

SCALE 1/2" = 1' - 0"

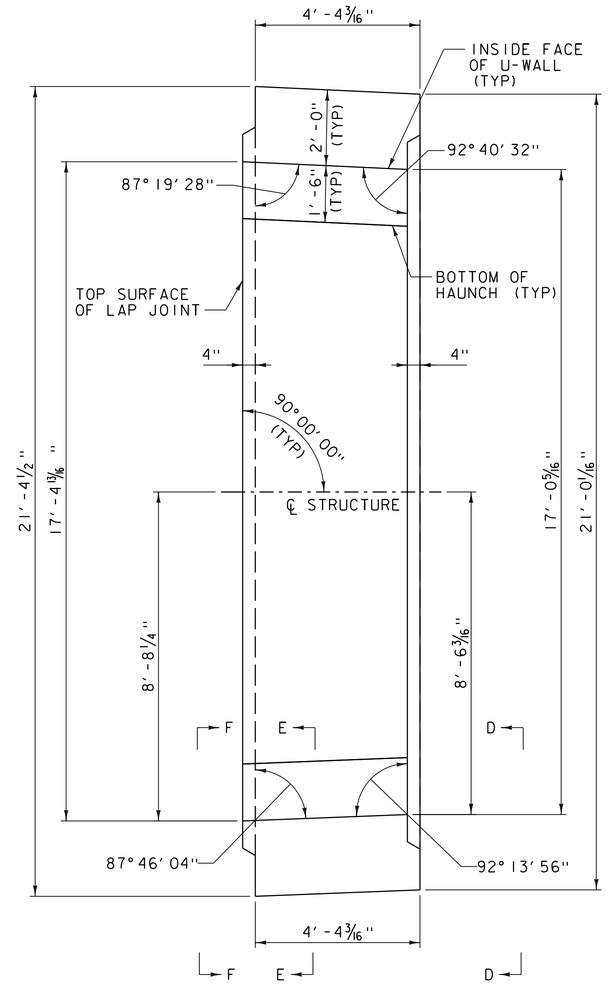

PLAN

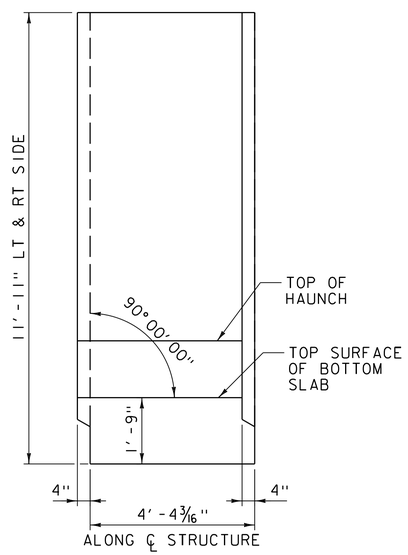

SECTION ALONG CENTERLINE STRUCTURE

UNIQUE U-WALL PIECE DETAILS - TYPE B

SCALE 1/2" = 1' - 0"

* DIMENSION PERPENDICULAR TO CENTERLINE OF JOINT.

NOTE:
SEE SOUTH U-WALL PIECE DETAILS (4 OF 9) FOR SECTION D-D, SECTION E-E, AND SECTION F-F.

PROJECT NAME: MIDDLEBURY	
PROJECT NUMBER: WCRS(23)	
FILE NAME: zl3g542uwalldtl_north.dgn	PLOT DATE: 4/30/2019
PROJECT LEADER: A.P. GUYETTE	DRAWN BY: K.C. BARRY
DESIGNED BY: K.C. BARRY	CHECKED BY: R.H. BARNES
NORTH U-WALL PIECE DETAILS (1 OF 20)	SHEET 213 OF 328

VHB 57603

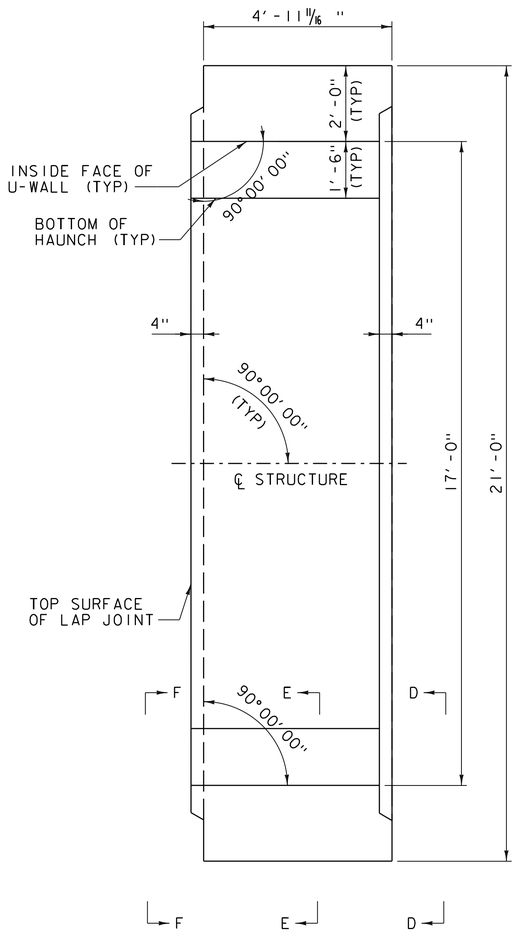

PLAN

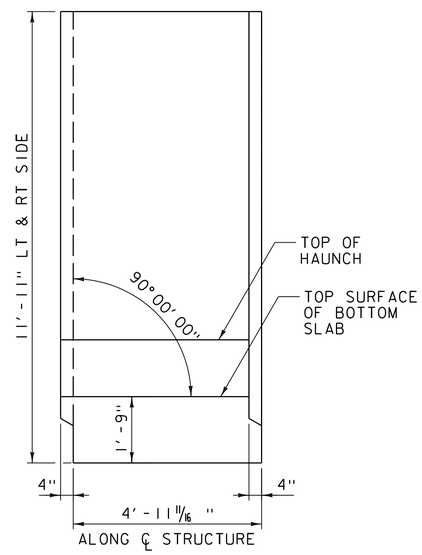

SECTION ALONG CENTERLINE STRUCTURE

UNIQUE U-WALL PIECE DETAILS - TYPES C

SCALE 1/2"=1'-0"

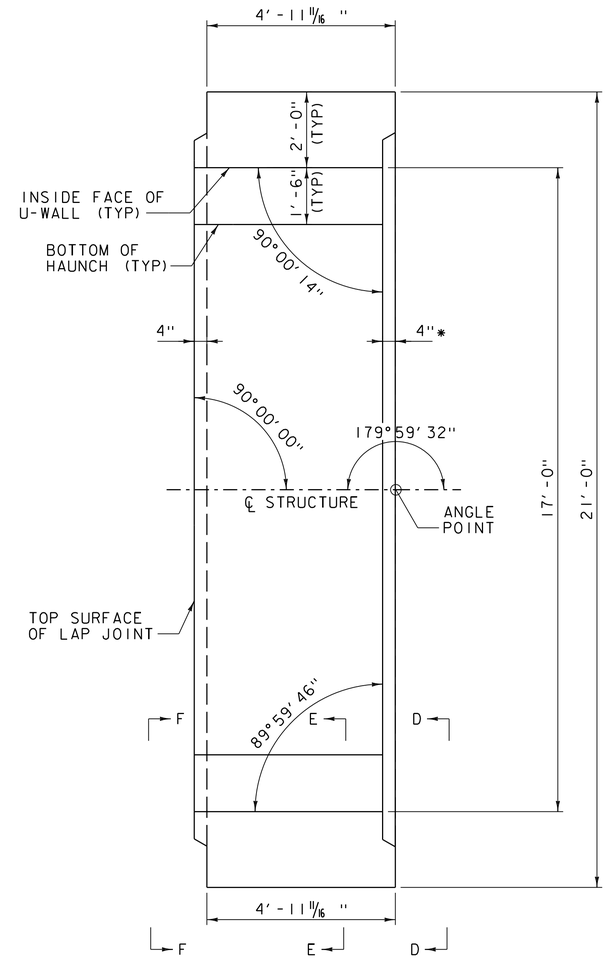

PLAN

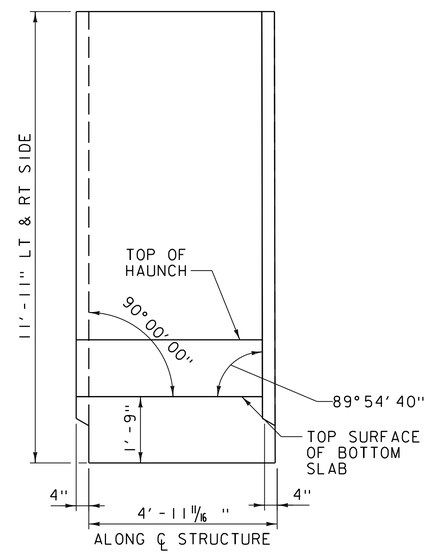

SECTION ALONG CENTERLINE STRUCTURE

UNIQUE U-WALL PIECE DETAILS - TYPES D

SCALE 1/2"=1'-0"

* DIMENSION PERPENDICULAR TO CENTERLINE OF JOINT.

NOTE:
SEE SOUTH U-WALL PIECE DETAILS (4 OF 9) FOR SECTION D-D, SECTION E-E, AND SECTION F-F.

PROJECT NAME: MIDDLEBURY	
PROJECT NUMBER: WCRS(23)	
FILE NAME: zl3g542uwalldtl_north.dgn	PLOT DATE: 4/30/2019
PROJECT LEADER: A.P. GUYETTE	DRAWN BY: K.C. BARRY
DESIGNED BY: K.C. BARRY	CHECKED BY: R.H. BARNES
NORTH U-WALL PIECE DETAILS (2 OF 20)	SHEET 214 OF 328

VHB 57603

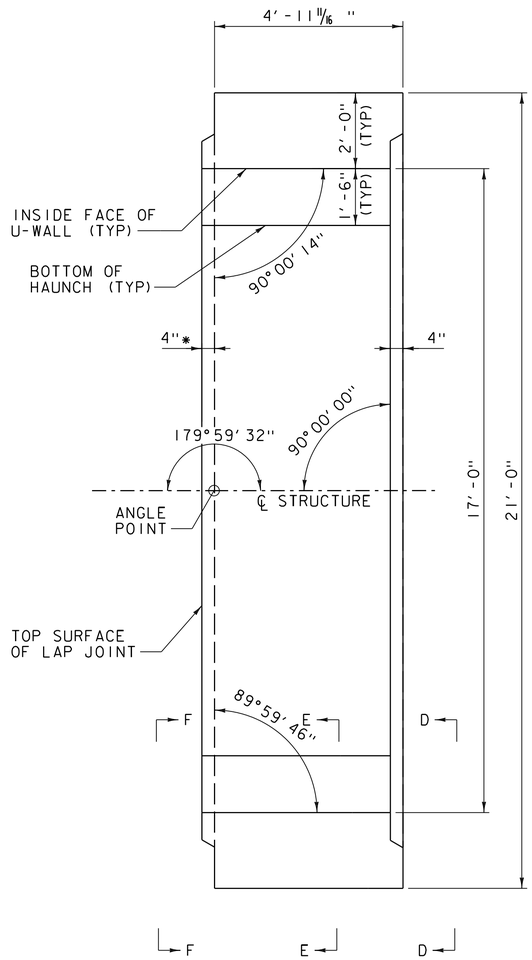

PLAN

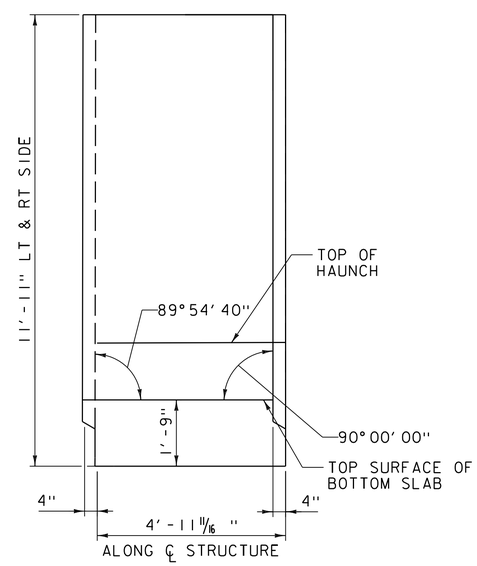

SECTION ALONG CENTERLINE STRUCTURE

UNIQUE U-WALL PIECE DETAILS - TYPE E

SCALE 1/2" = 1' - 0"

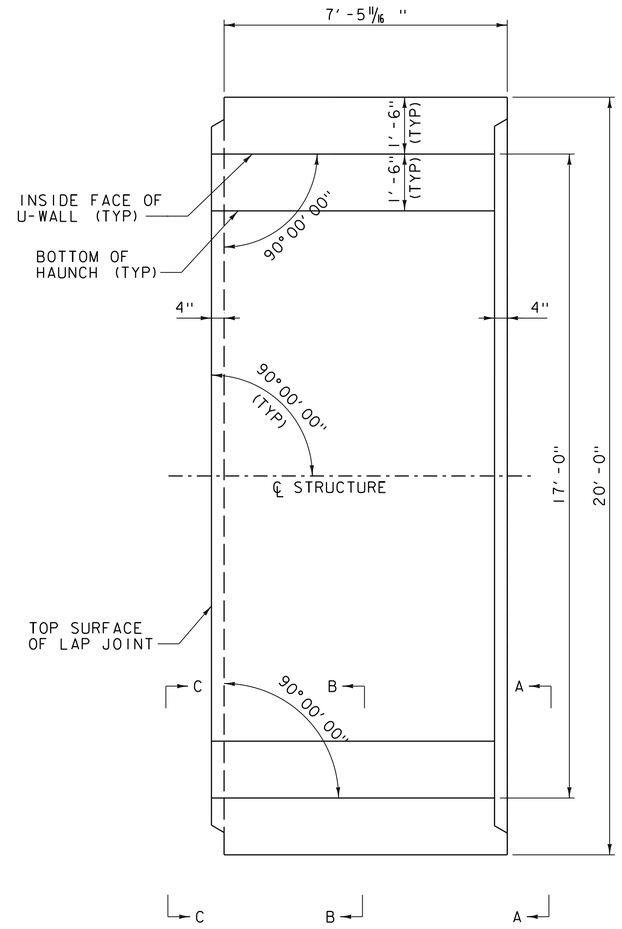

PLAN

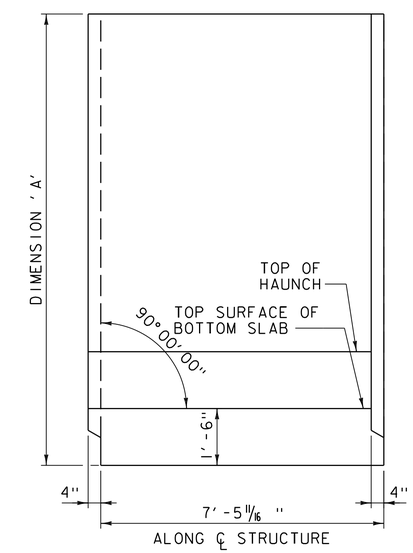

SECTION ALONG CENTERLINE STRUCTURE

UNIQUE U-WALL PIECE DETAILS - TYPES F, I, AE & AF

SCALE 1/2" = 1' - 0"

DIMENSION 'A' TABLE - TYPES F, I, AE & AF

UNIQUE PIECE TYPE	DIMENSION 'A'	
	LT SIDE	RT SIDE
TYPE F	11'-11"	11'-11"
TYPE I	9'-0"	11'-11"
TYPE AE	7'-3"	11'-11"
TYPE AF	7'-3"	8'-9"

* DIMENSION PERPENDICULAR TO CENTERLINE OF JOINT.

NOTE:
1. SEE SOUTH U-WALL PIECE DETAILS (4 OF 9) FOR SECTION D-D, SECTION E-E, AND SECTION F-F.
2. SEE SOUTH U-WALL PIECE DETAILS (1 OF 9) FOR SECTION A-A, SECTION B-B, AND SECTION C-C.

PROJECT NAME: MIDDLEBURY
PROJECT NUMBER: WCRS(23)

FILE NAME: zl3g542uwalldtl_north.dgn
PROJECT LEADER: A.P. GUYETTE
DESIGNED BY: K.C. BARRY
NORTH U-WALL PIECE DETAILS (3 OF 20)

PLOT DATE: 4/30/2019
DRAWN BY: K.C. BARRY
CHECKED BY: R.H. BARNES
SHEET 215 OF 328

VHB 57603

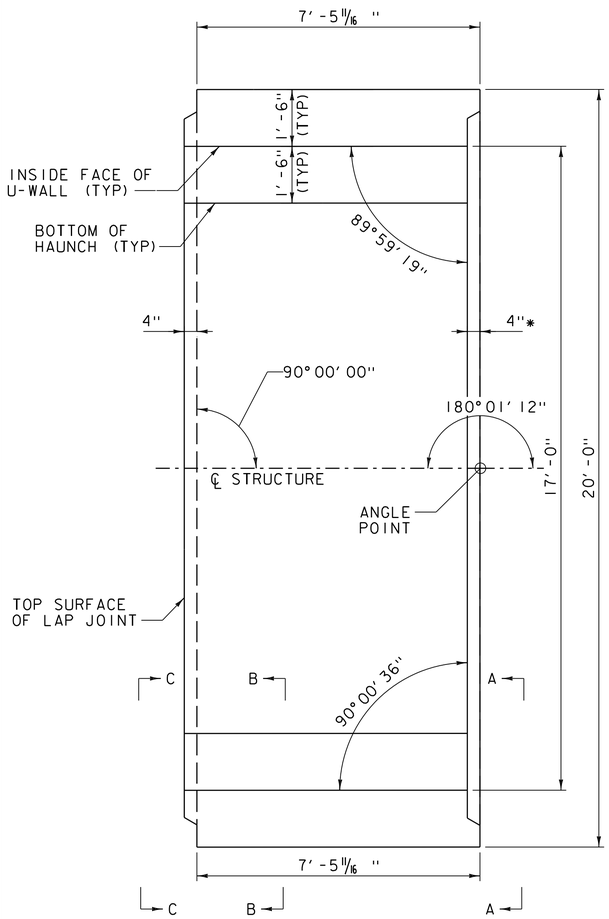

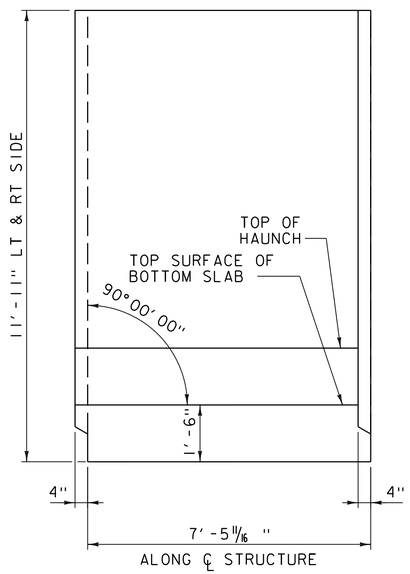

PLAN

SECTION ALONG CENTERLINE STRUCTURE

UNIQUE U-WALL PIECE DETAILS - TYPE G

SCALE 1/2" = 1' -0"

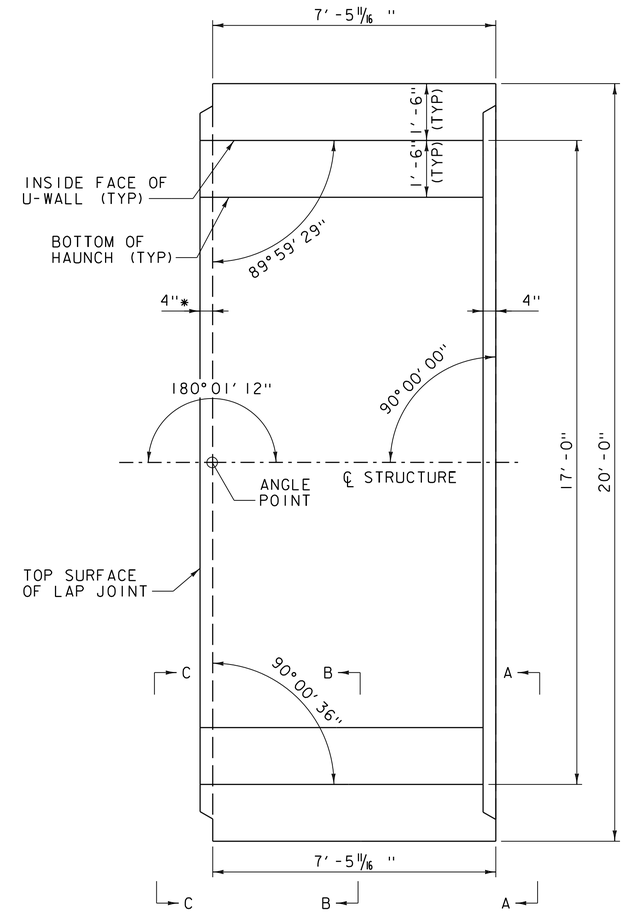

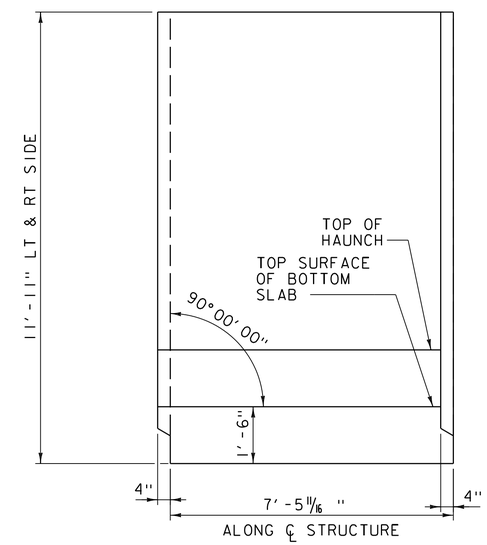

PLAN

SECTION ALONG CENTERLINE STRUCTURE

UNIQUE U-WALL PIECE DETAILS - TYPE H

SCALE 1/2" = 1' -0"

* DIMENSION PERPENDICULAR TO CENTERLINE OF JOINT.

NOTE:
SEE SOUTH U-WALL PIECE DETAILS (1 OF 9) FOR SECTION A-A, SECTION B-B, AND SECTION C-C.

PROJECT NAME: MIDDLEBURY	
PROJECT NUMBER: WCRS(23)	
FILE NAME: zl3g542uwalldtl_north.dgn	PLOT DATE: 4/30/2019
PROJECT LEADER: A.P. GUYETTE	DRAWN BY: K.C. BARRY
DESIGNED BY: K.C. BARRY	CHECKED BY: R.H. BARNES
NORTH U-WALL PIECE DETAILS (4 OF 20)	SHEET 216 OF 328

VHB 57603

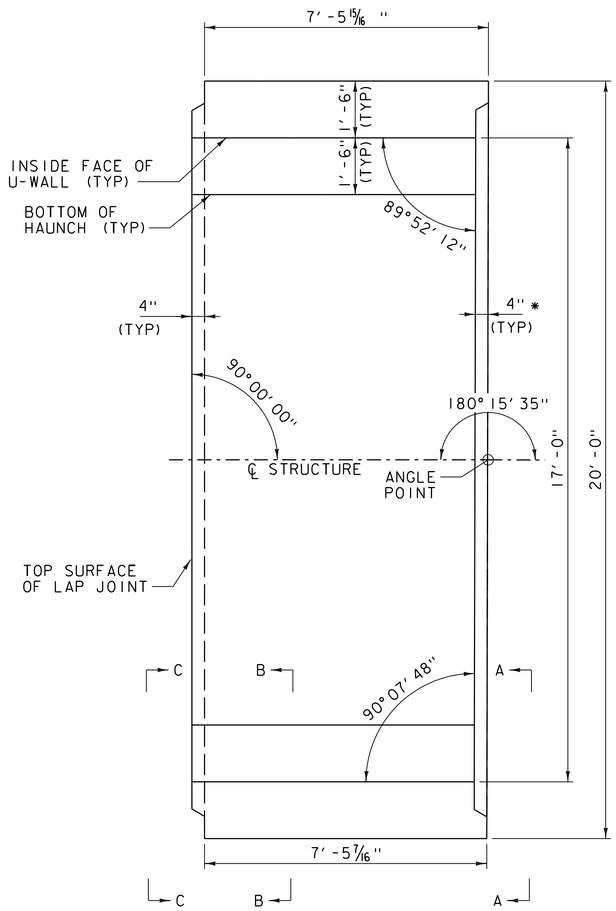

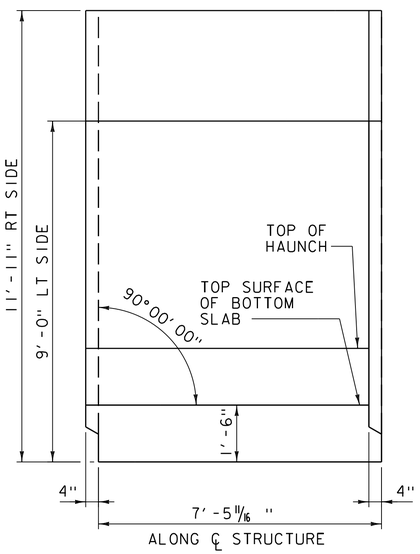

PLAN

SECTION ALONG CENTERLINE STRUCTURE

UNIQUE U-WALL PIECE DETAILS - TYPE J

SCALE 1/2"=1'-0"

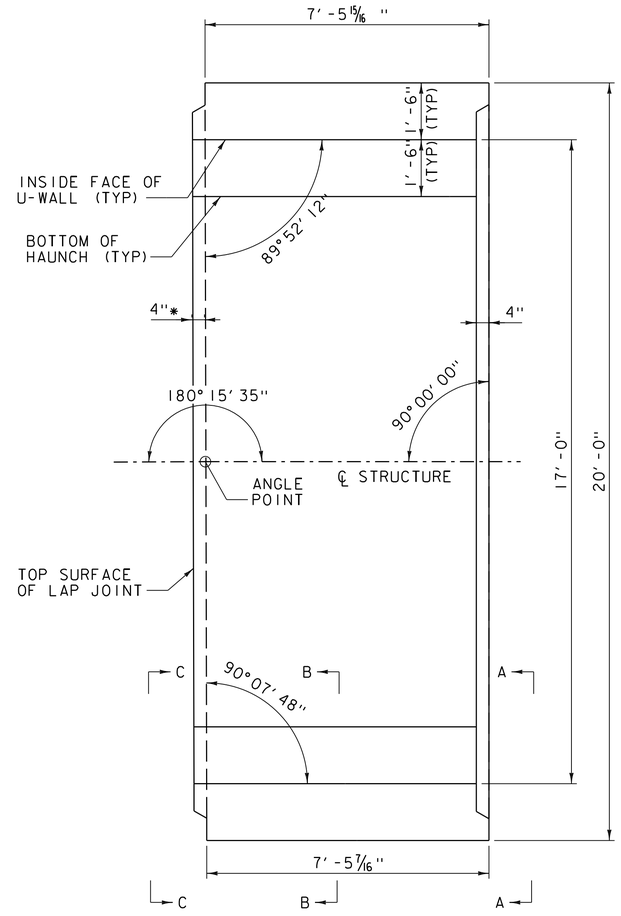

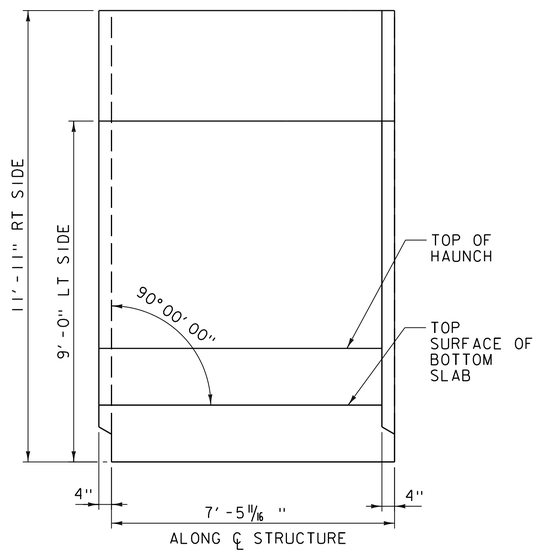

PLAN

SECTION ALONG CENTERLINE STRUCTURE

UNIQUE U-WALL PIECE DETAILS - TYPE K

SCALE 1/2"=1'-0"

* DIMENSION PERPENDICULAR TO CENTERLINE OF JOINT.

NOTE:
SEE SOUTH U-WALL PIECE DETAILS (1 OF 9) FOR SECTION A-A, SECTION B-B, AND SECTION C-C.

PROJECT NAME: MIDDLEBURY	
PROJECT NUMBER: WCRS(23)	
FILE NAME: zl3g542uwalldtl_north.dgn	PLOT DATE: 4/30/2019
PROJECT LEADER: A.P. GUYETTE	DRAWN BY: K.C. BARRY
DESIGNED BY: K.C. BARRY	CHECKED BY: R.H. BARNES
NORTH U-WALL PIECE DETAILS (5 OF 20)	SHEET 217 OF 328

VHB 57603

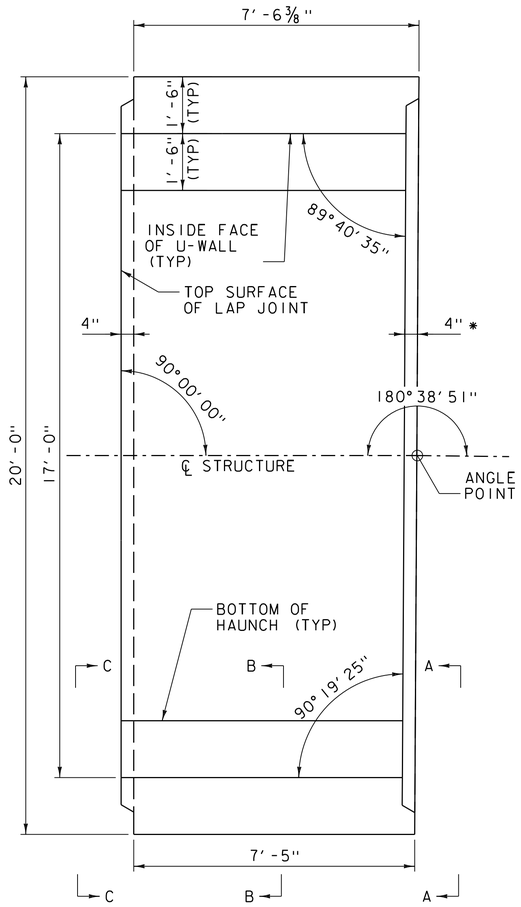

PLAN

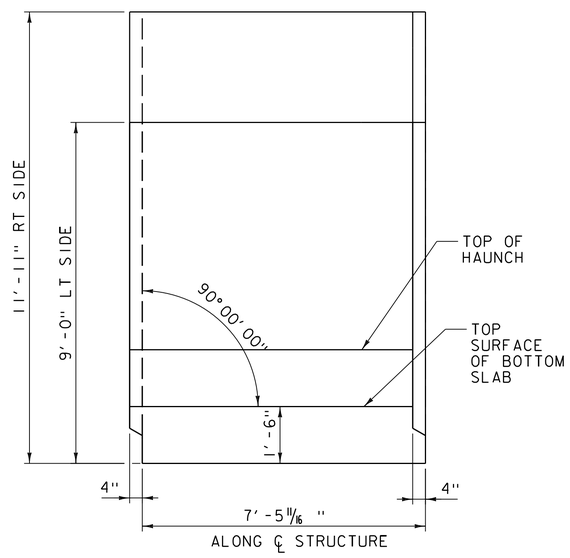

SECTION ALONG CENTERLINE STRUCTURE

UNIQUE U-WALL PIECE DETAILS - TYPE L

SCALE 1/2"=1'-0"

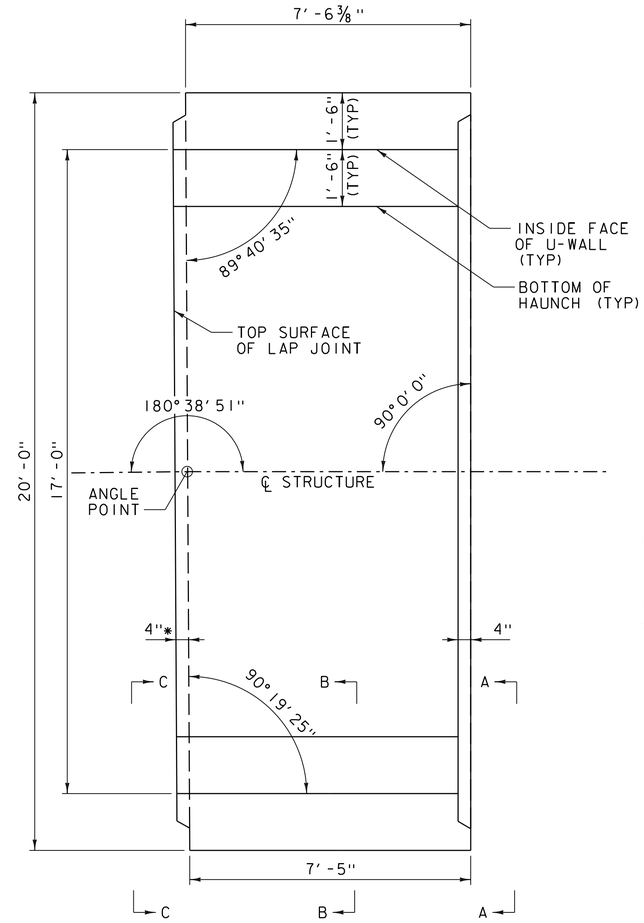

PLAN

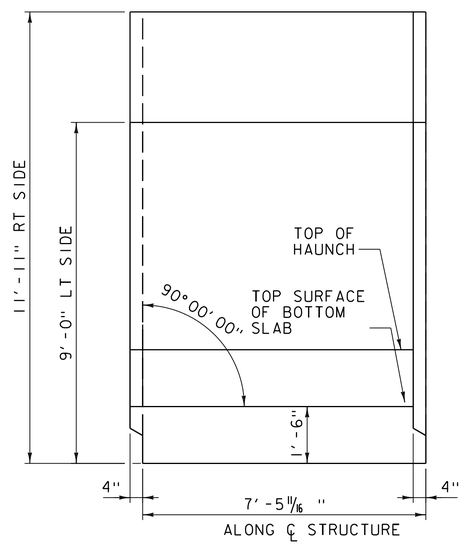

SECTION ALONG CENTERLINE STRUCTURE

UNIQUE U-WALL PIECE DETAILS - TYPE M

SCALE 1/2"=1'-0"

* DIMENSION PERPENDICULAR TO CENTERLINE OF JOINT.

NOTE:
SEE SOUTH U-WALL PIECE DETAILS (1 OF 9) FOR SECTION A-A, SECTION B-B, AND SECTION C-C.

PROJECT NAME: MIDDLEBURY	
PROJECT NUMBER: WCRS(23)	
FILE NAME: z13g542uwalldtl_north.dgn	PLOT DATE: 4/30/2019
PROJECT LEADER: A.P. GUYETTE	DRAWN BY: K.C. BARRY
DESIGNED BY: K.C. BARRY	CHECKED BY: R.H. BARNES
NORTH U-WALL PIECE DETAILS (6 OF 20)	SHEET 218 OF 328

VHB 57603

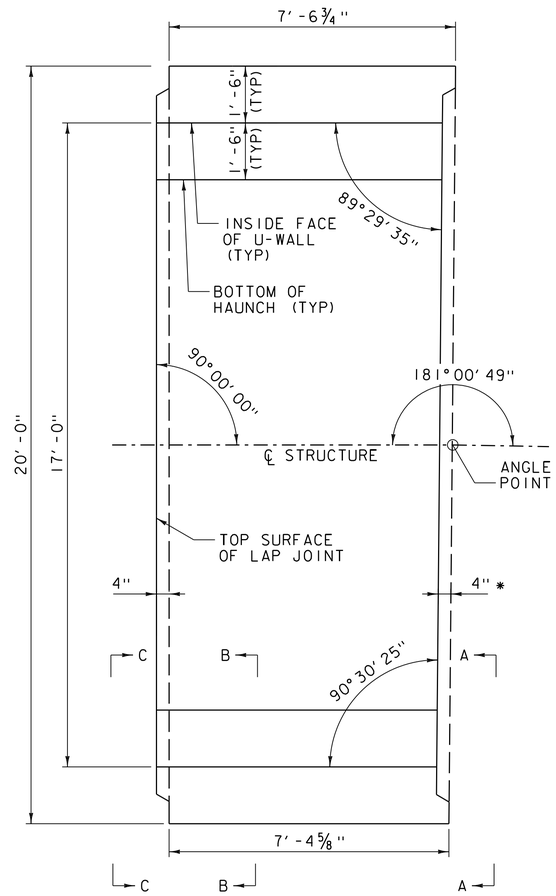

PLAN

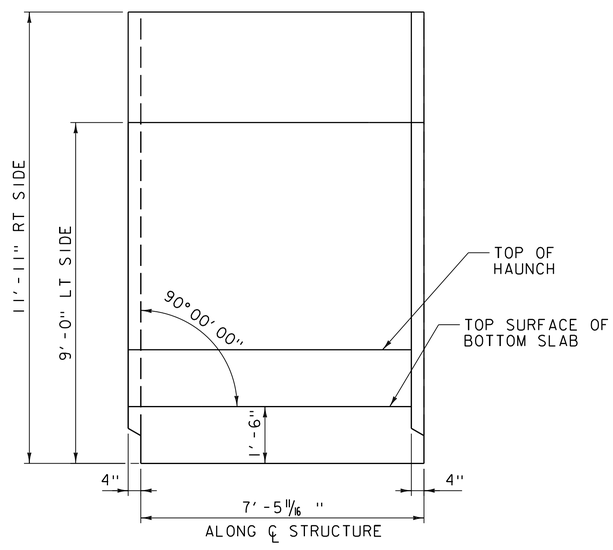

SECTION ALONG CENTERLINE STRUCTURE

UNIQUE U-WALL PIECE DETAILS - TYPE N

SCALE ½"=1'-0"

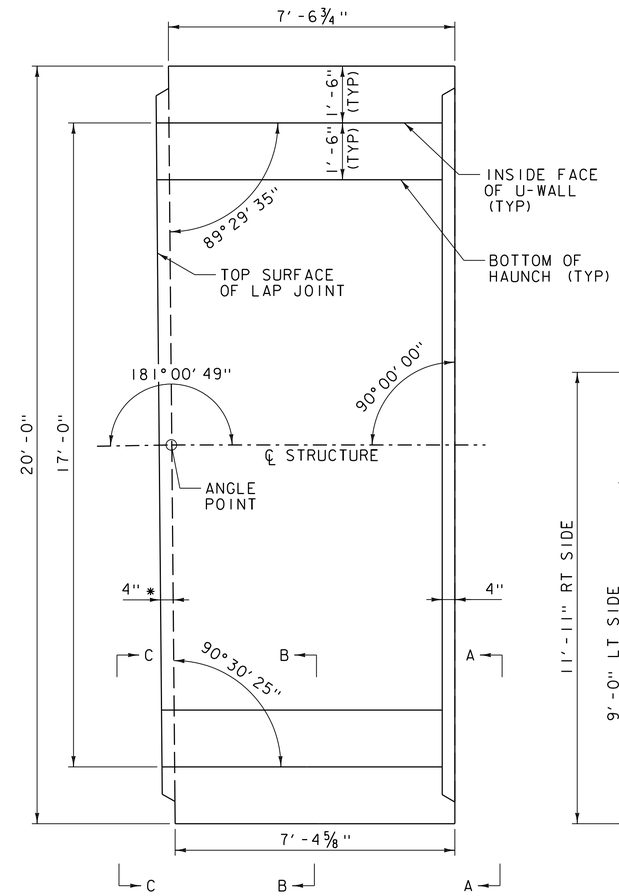

PLAN

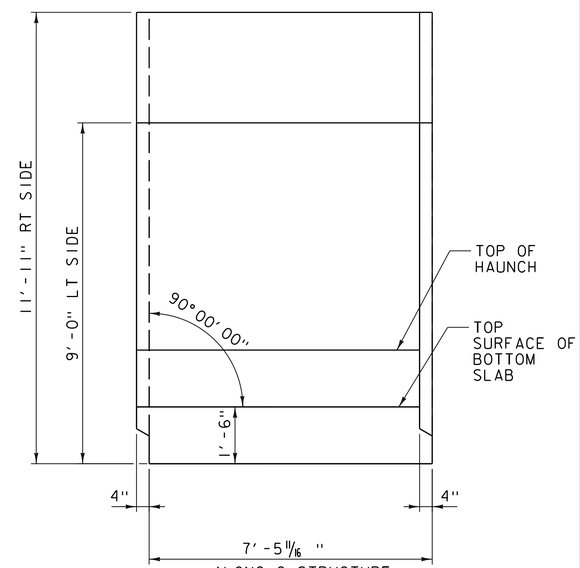

SECTION ALONG CENTERLINE STRUCTURE

UNIQUE U-WALL PIECE DETAILS - TYPE O

SCALE ½"=1'-0"

* DIMENSION PERPENDICULAR TO CENTERLINE OF JOINT.

NOTE:
SEE SOUTH U-WALL PIECE DETAILS (1 OF 9) FOR SECTION A-A, SECTION B-B, AND SECTION C-C.

PROJECT NAME: MIDDLEBURY	
PROJECT NUMBER: WCRS(23)	
FILE NAME: zl3g542uwalldtl_north.dgn	PLOT DATE: 4/30/2019
PROJECT LEADER: A.P. GUYETTE	DRAWN BY: K.C. BARRY
DESIGNED BY: K.C. BARRY	CHECKED BY: R.H. BARNES
NORTH U-WALL PIECE DETAILS (7 OF 20)	SHEET 219 OF 328

VHB 57603

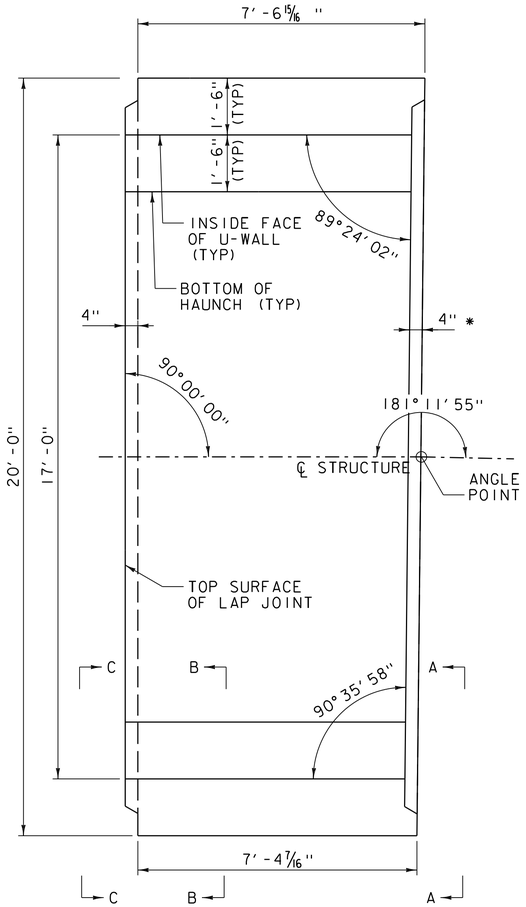

PLAN

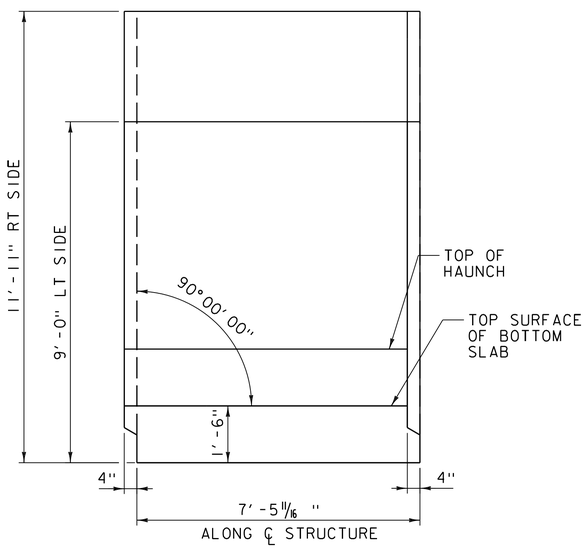

SECTION ALONG CENTERLINE STRUCTURE

UNIQUE U-WALL PIECE DETAILS - TYPE P

SCALE 1/2" = 1' -0"

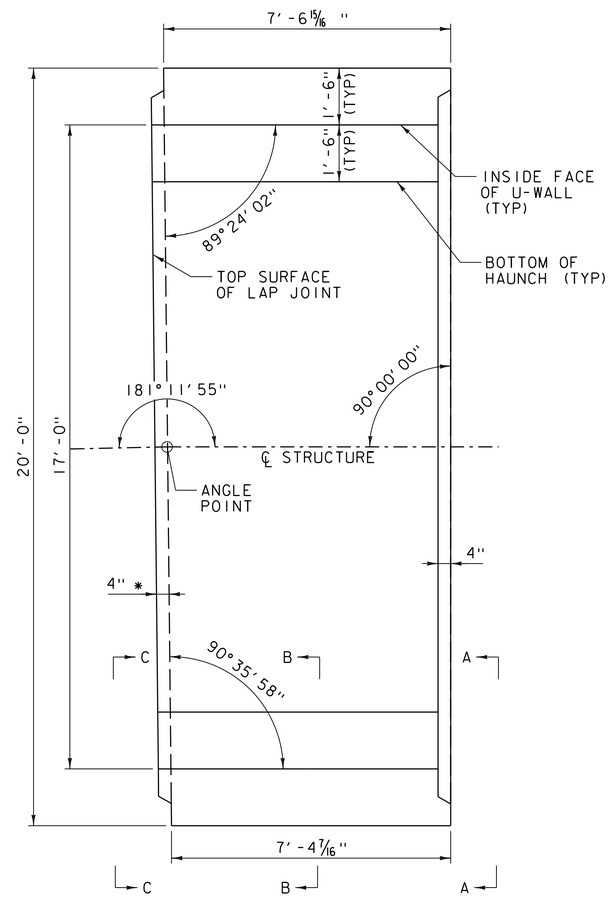

PLAN

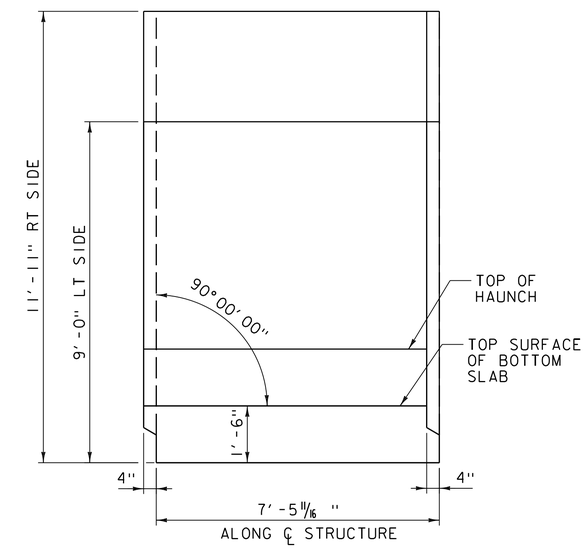

SECTION ALONG CENTERLINE STRUCTURE

UNIQUE U-WALL PIECE DETAILS - TYPE Q

SCALE 1/2" = 1' -0"

* DIMENSION PERPENDICULAR TO CENTERLINE OF JOINT.

NOTE:
SEE SOUTH U-WALL PIECE DETAILS (1 OF 9) FOR SECTION A-A, SECTION B-B, AND SECTION C-C.

PROJECT NAME: MIDDLEBURY	
PROJECT NUMBER: WCRS(23)	
FILE NAME: zl3g542uwalldtl_north.dgn	PLOT DATE: 4/30/2019
PROJECT LEADER: A.P. GUYETTE	DRAWN BY: K.C. BARRY
DESIGNED BY: K.C. BARRY	CHECKED BY: R.H. BARNES
NORTH U-WALL PIECE DETAILS (8 OF 20)	SHEET 220 OF 328

VHB 57603

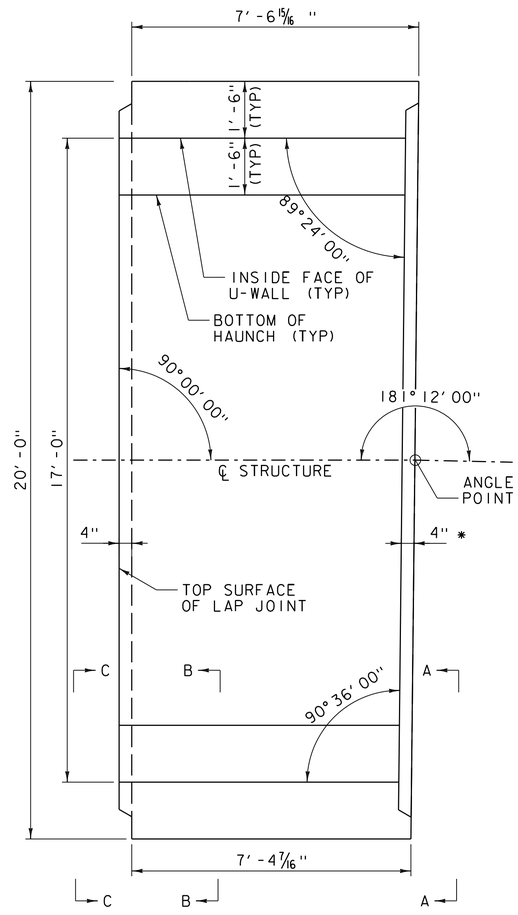

PLAN

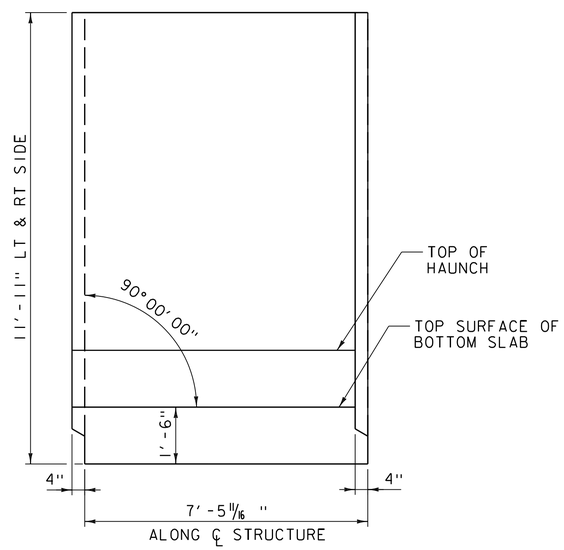

SECTION ALONG CENTERLINE STRUCTURE

UNIQUE U-WALL PIECE DETAILS - TYPE R

SCALE 1/2" = 1'-0"

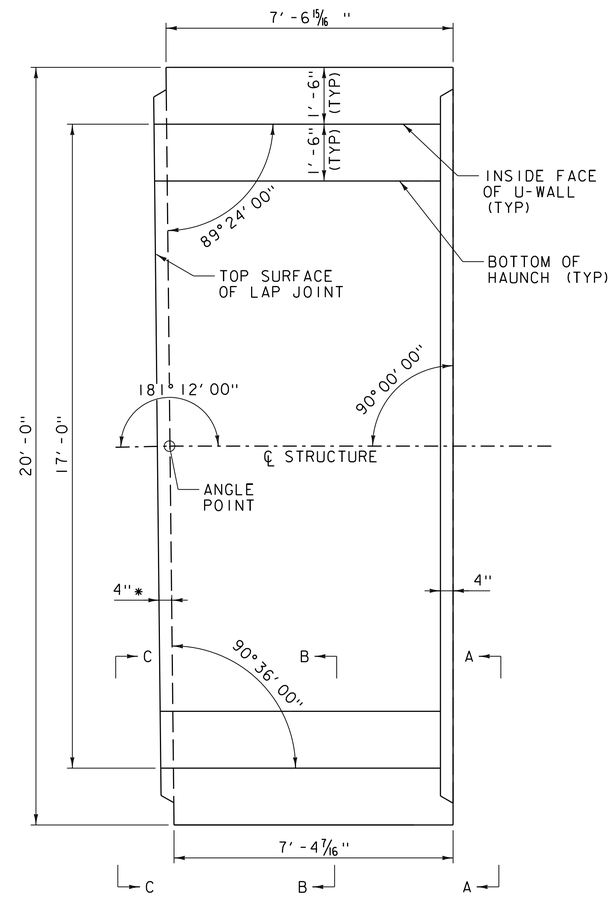

PLAN

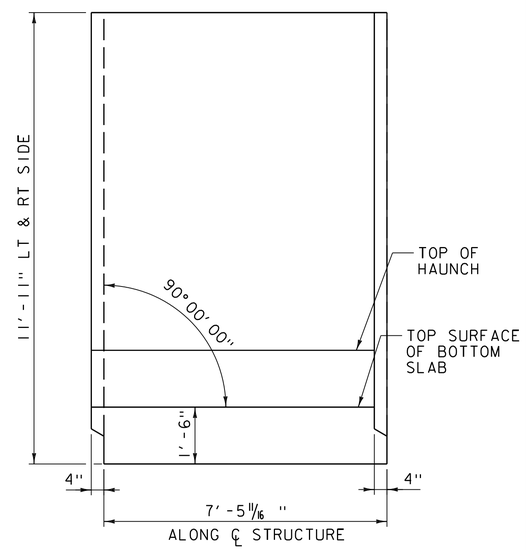

SECTION ALONG CENTERLINE STRUCTURE

UNIQUE U-WALL PIECE DETAILS - TYPE S

SCALE 1/2" = 1'-0"

* DIMENSION PERPENDICULAR TO CENTERLINE OF JOINT.

NOTE:
SEE SOUTH U-WALL PIECE DETAILS (1 OF 9) FOR SECTION A-A, SECTION B-B, AND SECTION C-C.

PROJECT NAME: MIDDLEBURY	
PROJECT NUMBER: WCRS(23)	
FILE NAME: zl3g542uwalldtl_north.dgn	PLOT DATE: 4/30/2019
PROJECT LEADER: A.P. GUYETTE	DRAWN BY: K.C. BARRY
DESIGNED BY: K.C. BARRY	CHECKED BY: R.H. BARNES
NORTH U-WALL PIECE DETAILS (9 OF 20)	SHEET 221 OF 328

VHB 57603

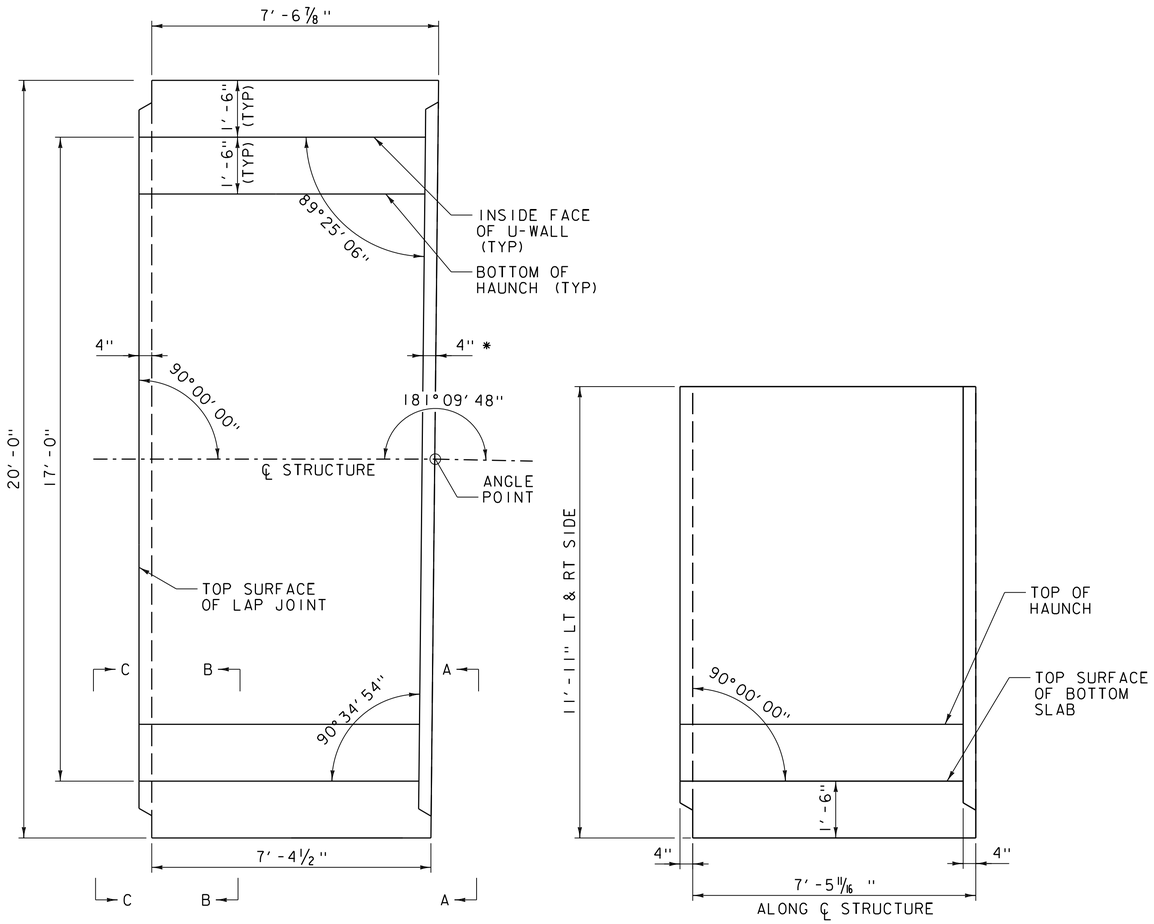

PLAN

SECTION ALONG CENTERLINE STRUCTURE

UNIQUE U-WALL PIECE DETAILS - TYPE T

SCALE 1/2" = 1'-0"

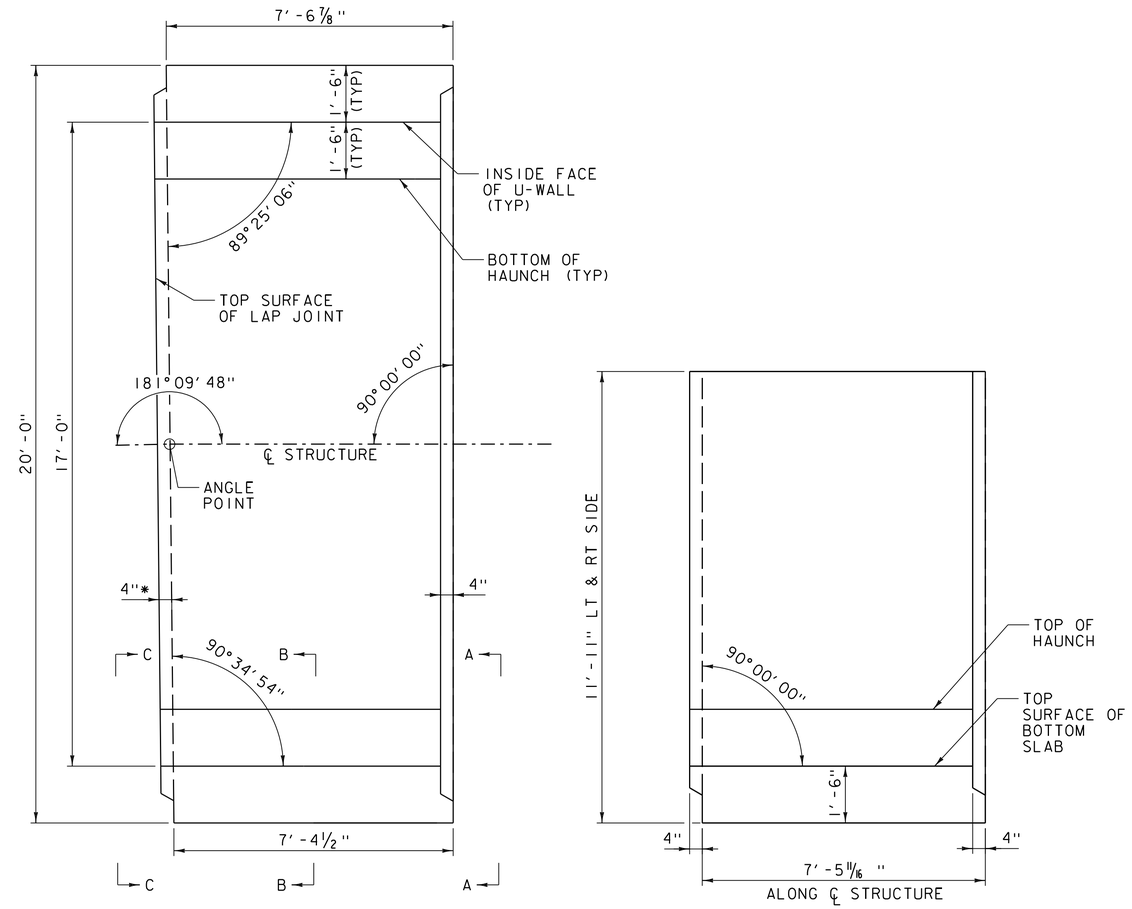

PLAN

SECTION ALONG CENTERLINE STRUCTURE

UNIQUE U-WALL PIECE DETAILS - TYPE U

SCALE 1/2" = 1'-0"

* DIMENSION PERPENDICULAR TO CENTERLINE OF JOINT.

NOTE:
SEE SOUTH U-WALL PIECE DETAILS (1 OF 9) FOR SECTION A-A, SECTION B-B, AND SECTION C-C.

PROJECT NAME: MIDDLEBURY	
PROJECT NUMBER: WCRS(23)	
FILE NAME: zl3g542uwalldtl_north.dgn	PLOT DATE: 4/30/2019
PROJECT LEADER: A.P. GUYETTE	DRAWN BY: K.C. BARRY
DESIGNED BY: K.C. BARRY	CHECKED BY: R.H. BARNES
NORTH U-WALL PIECE DETAILS (10 OF 20)	SHEET 222 OF 328

VHB 57603

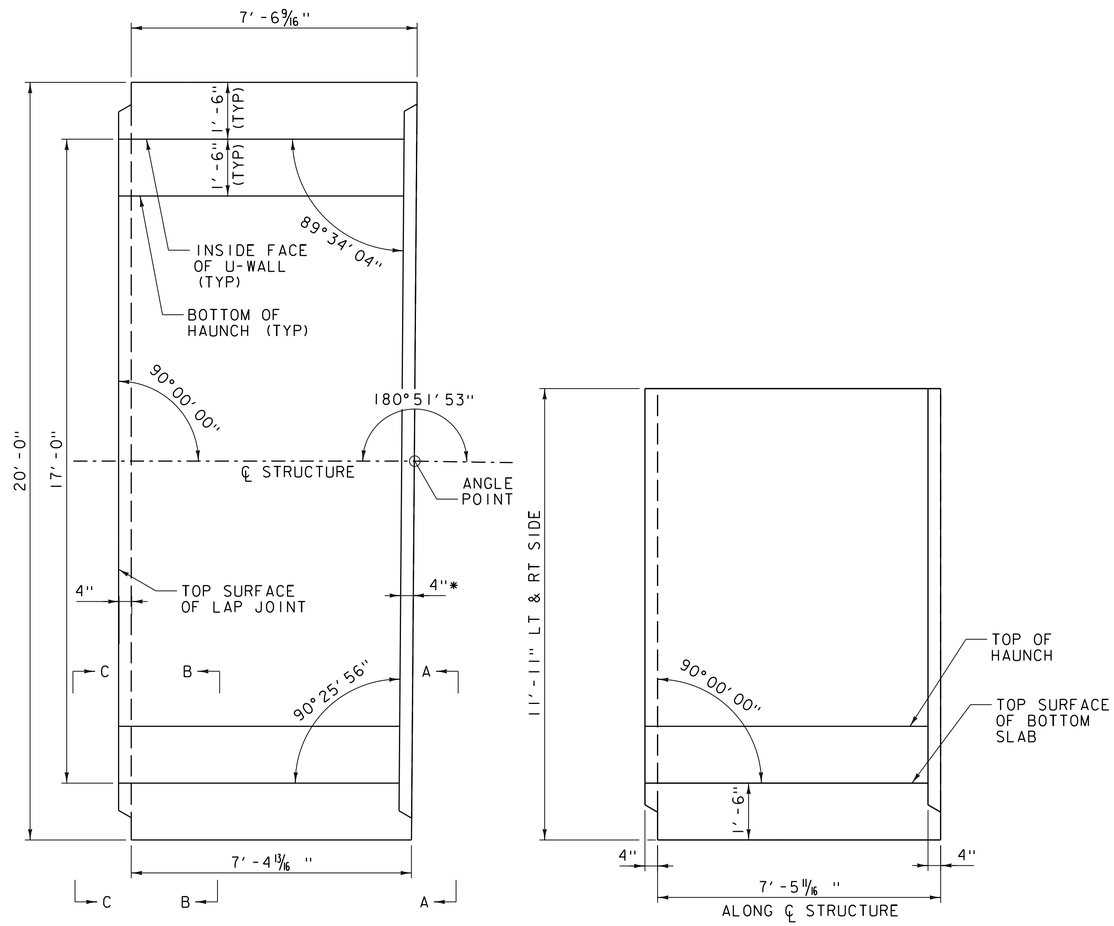

PLAN

SECTION ALONG CENTERLINE STRUCTURE

UNIQUE U-WALL PIECE DETAILS - TYPE V

SCALE 1/2"=1'-0"

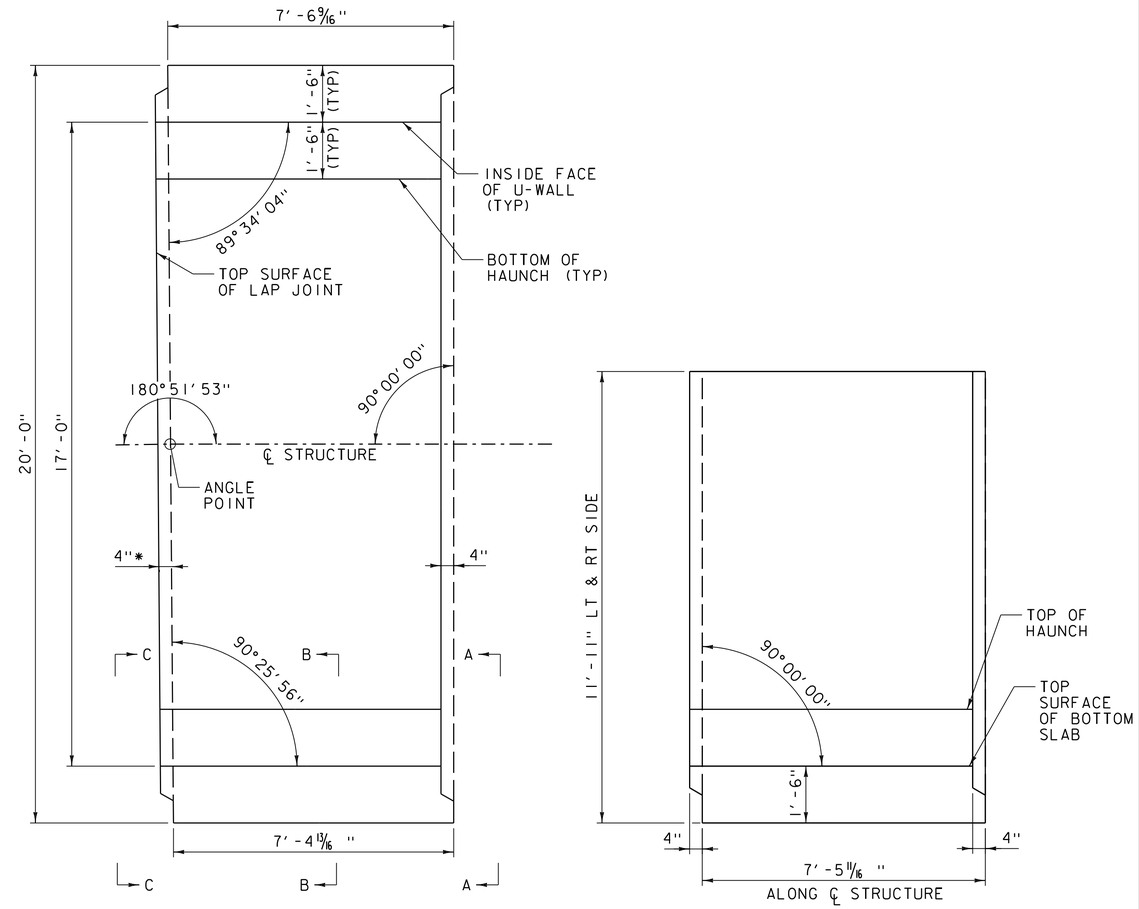

PLAN

SECTION ALONG CENTERLINE STRUCTURE

UNIQUE U-WALL PIECE DETAILS - TYPE W

SCALE 1/2"=1'-0"

* DIMENSION PERPENDICULAR TO CENTERLINE OF JOINT.

NOTE:
SEE SOUTH U-WALL PIECE DETAILS (1 OF 9) FOR SECTION A-A, SECTION B-B, AND SECTION C-C.

PROJECT NAME: MIDDLEBURY	
PROJECT NUMBER: WCRS(23)	
FILE NAME: zl3g542uwalldtl_north.dgn	PLOT DATE: 4/30/2019
PROJECT LEADER: A.P. GUYETTE	DRAWN BY: K.C. BARRY
DESIGNED BY: K.C. BARRY	CHECKED BY: R.H. BARNES
NORTH U-WALL PIECE DETAILS (11 OF 20)	SHEET 223 OF 328

VHB 57603

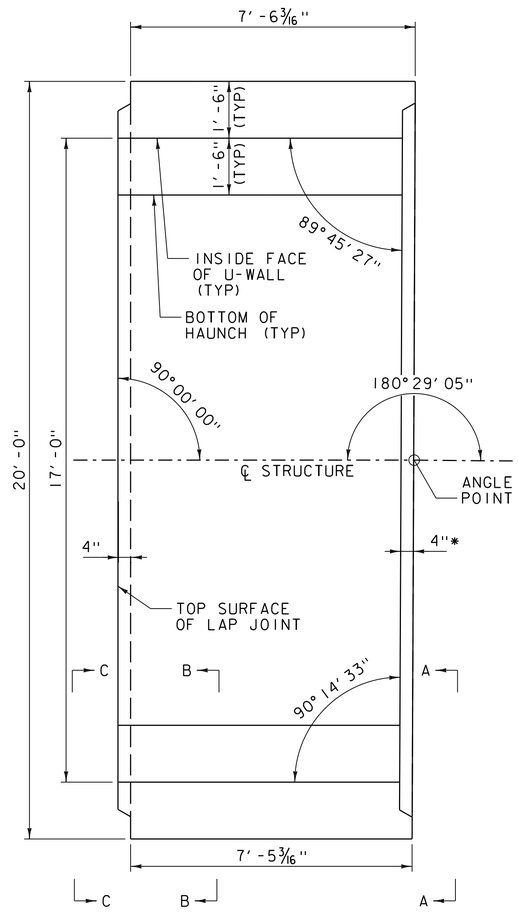

PLAN

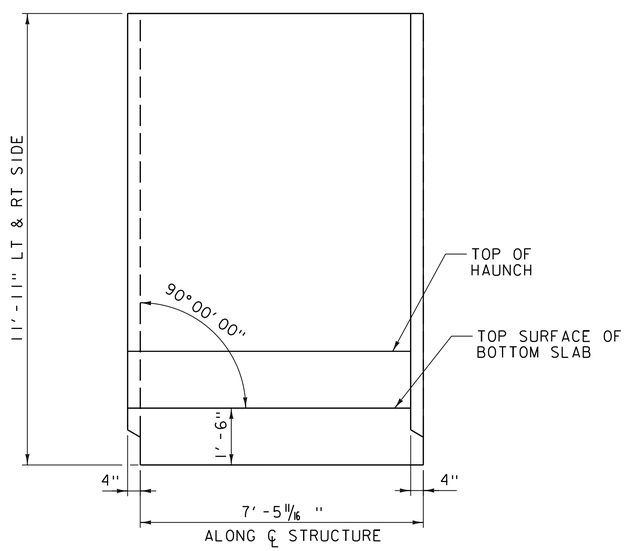

SECTION ALONG CENTERLINE STRUCTURE

UNIQUE U-WALL PIECE DETAILS - TYPE X

SCALE 1/2" = 1'-0"

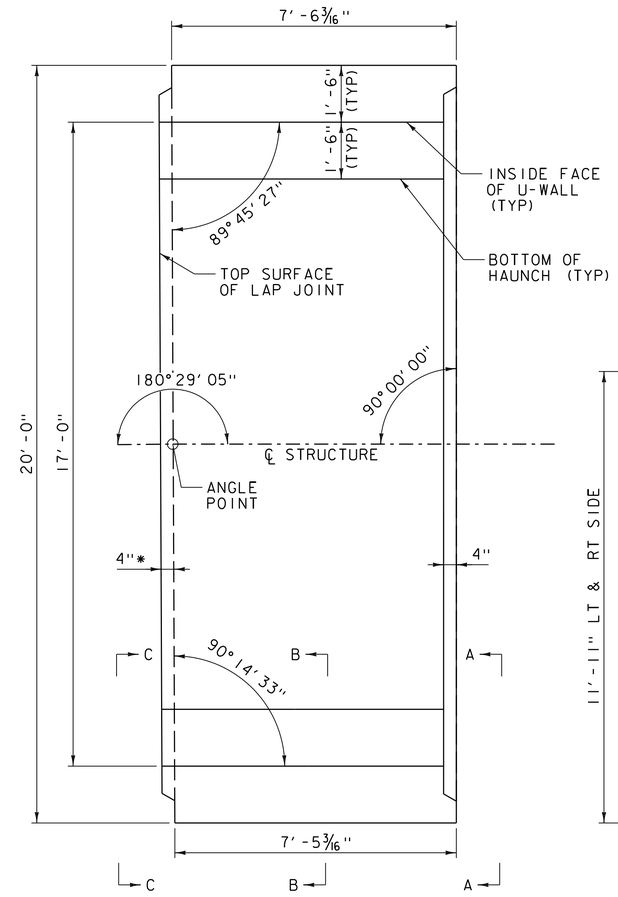

PLAN

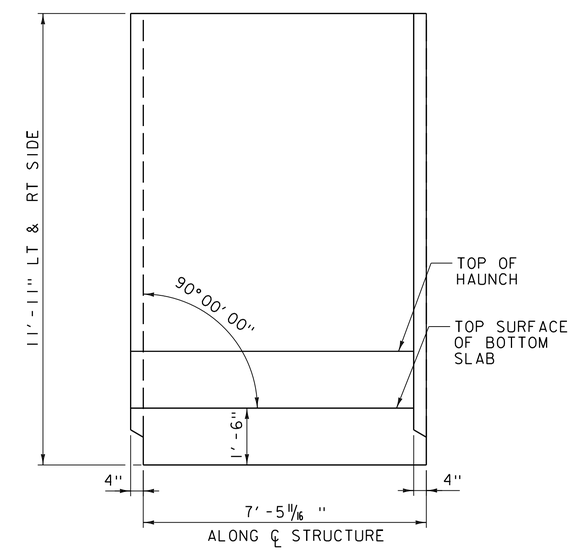

SECTION ALONG CENTERLINE STRUCTURE

UNIQUE U-WALL PIECE DETAILS - TYPE Y

SCALE 1/2" = 1'-0"

* DIMENSION PERPENDICULAR TO CENTERLINE OF JOINT.

NOTE:
SEE SOUTH U-WALL PIECE DETAILS (1 OF 9) FOR SECTION A-A, SECTION B-B, AND SECTION C-C.

PROJECT NAME: MIDDLEBURY	
PROJECT NUMBER: WCRS(23)	
FILE NAME: zl3g542uwalldtl_north.dgn	PLOT DATE: 4/30/2019
PROJECT LEADER: A.P. GUYETTE	DRAWN BY: K.C. BARRY
DESIGNED BY: K.C. BARRY	CHECKED BY: R.H. BARNES
NORTH U-WALL PIECE DETAILS (12 OF 20)	SHEET 224 OF 328

VHB 57603

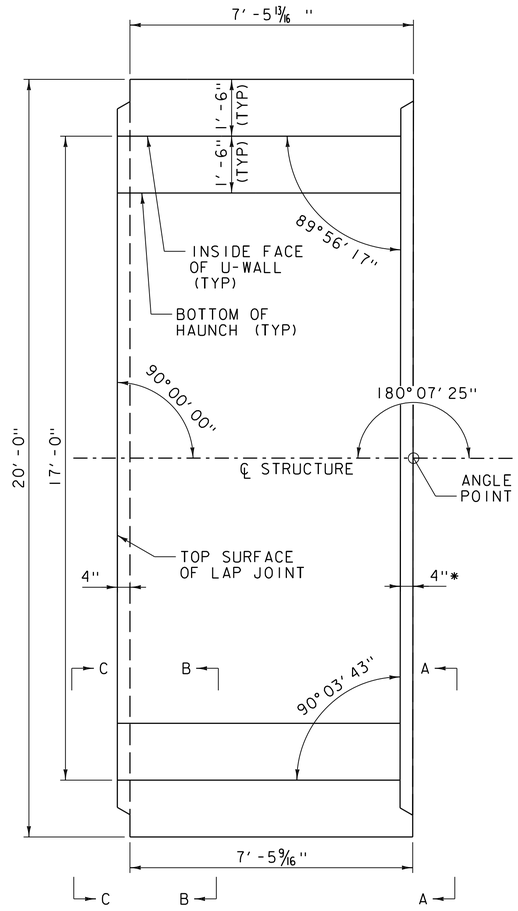

PLAN

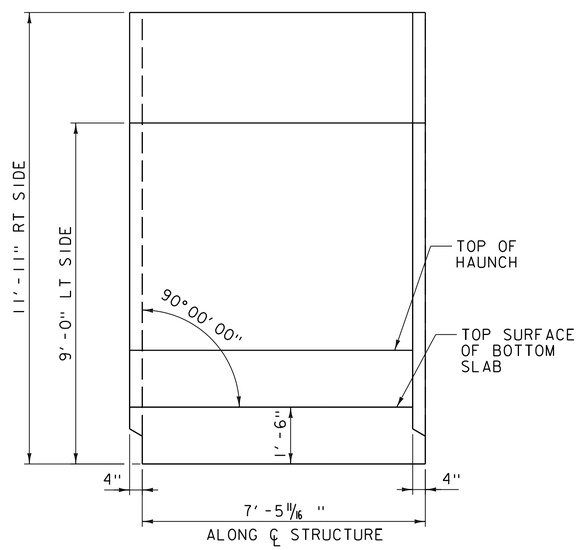

SECTION ALONG CENTERLINE STRUCTURE

UNIQUE U-WALL PIECE DETAILS - TYPE Z

SCALE 1/2"=1'-0"

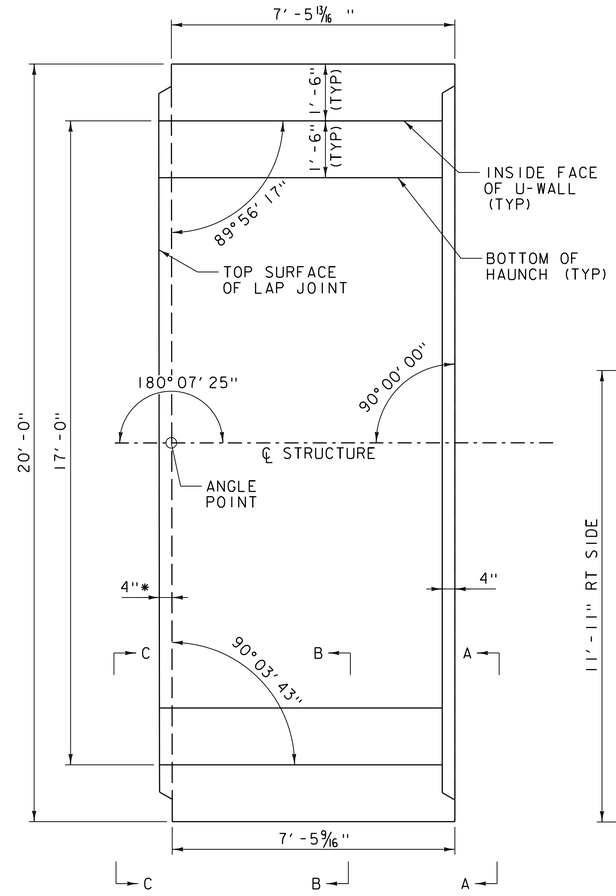

PLAN

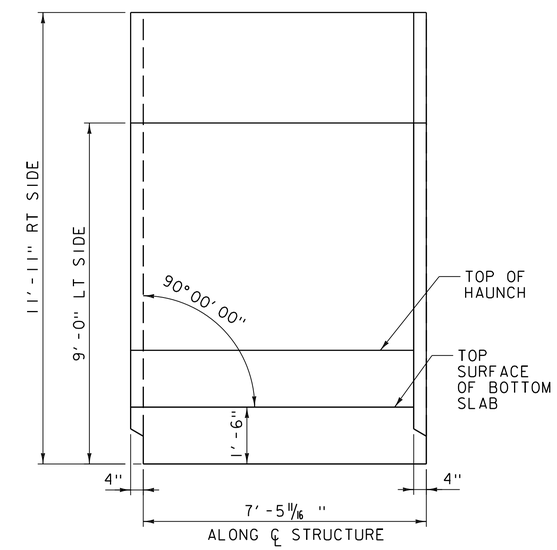

SECTION ALONG CENTERLINE STRUCTURE

UNIQUE U-WALL PIECE DETAILS - TYPE AB

SCALE 1/2"=1'-0"

* DIMENSION PERPENDICULAR TO CENTERLINE OF JOINT.

NOTE:
SEE SOUTH U-WALL PIECE DETAILS (1 OF 9) FOR SECTION A-A, SECTION B-B, AND SECTION C-C.

PROJECT NAME: MIDDLEBURY	
PROJECT NUMBER: WCRS(23)	
FILE NAME: zl3g542uwalldtl_north.dgn	PLOT DATE: 4/30/2019
PROJECT LEADER: A.P. GUYETTE	DRAWN BY: K.C. BARRY
DESIGNED BY: K.C. BARRY	CHECKED BY: R.H. BARNES
NORTH U-WALL PIECE DETAILS (13 OF 20)	SHEET 225 OF 328

VHB 57603

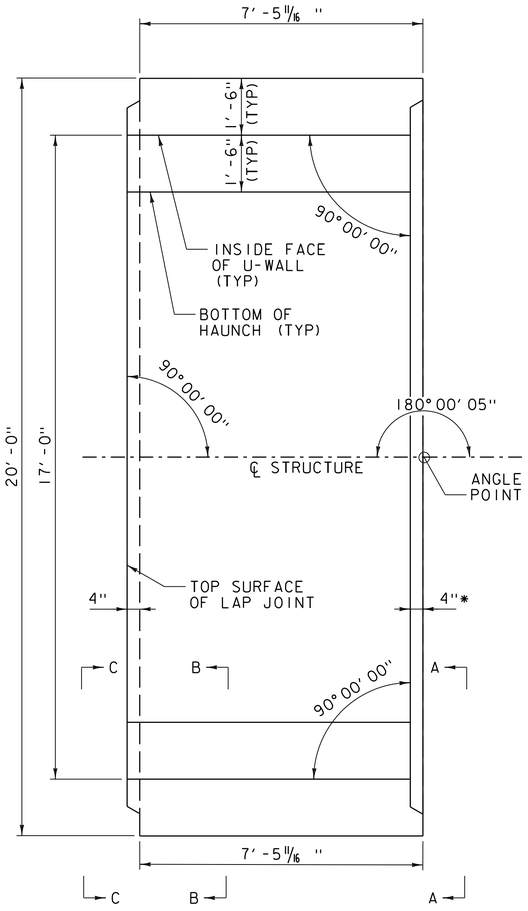

PLAN

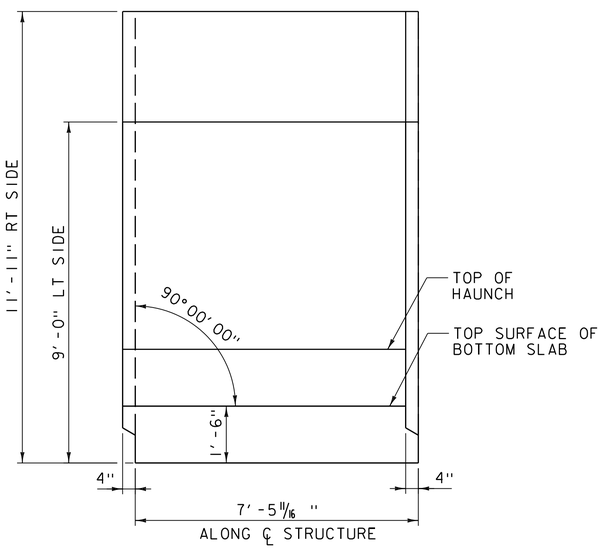

SECTION ALONG CENTERLINE STRUCTURE

UNIQUE U-WALL PIECE DETAILS - TYPE AC

SCALE 1/2"=1'-0"

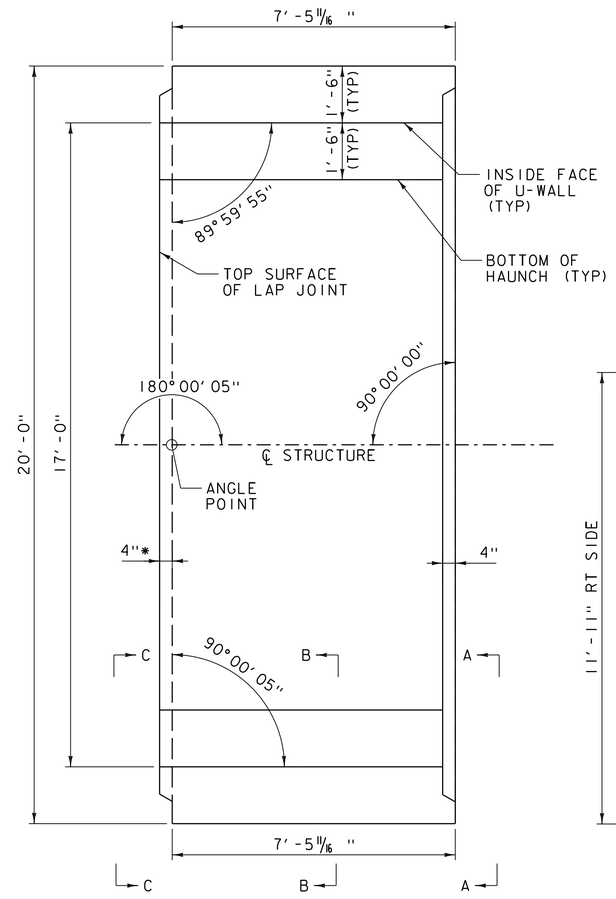

PLAN

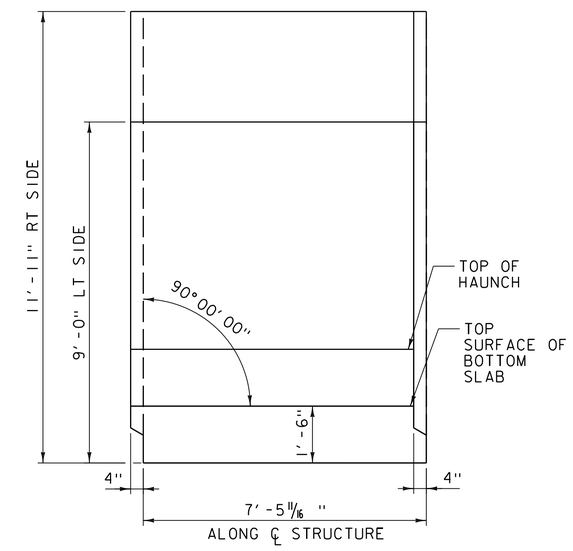

SECTION ALONG CENTERLINE STRUCTURE

UNIQUE U-WALL PIECE DETAILS - TYPE AD

SCALE 1/2"=1'-0"

* DIMENSION PERPENDICULAR TO CENTERLINE OF JOINT.

NOTE:
SEE SOUTH U-WALL PIECE DETAILS (1 OF 9) FOR SECTION A-A, SECTION B-B, AND SECTION C-C.

PROJECT NAME: MIDDLEBURY	
PROJECT NUMBER: WCRS(23)	
FILE NAME: z13g542uwalldtl_north.dgn	PLOT DATE: 4/30/2019
PROJECT LEADER: A.P. GUYETTE	DRAWN BY: K.C. BARRY
DESIGNED BY: K.C. BARRY	CHECKED BY: R.H. BARNES
NORTH U-WALL PIECE DETAILS (14 OF 20)	SHEET 226 OF 328

VHB 57603

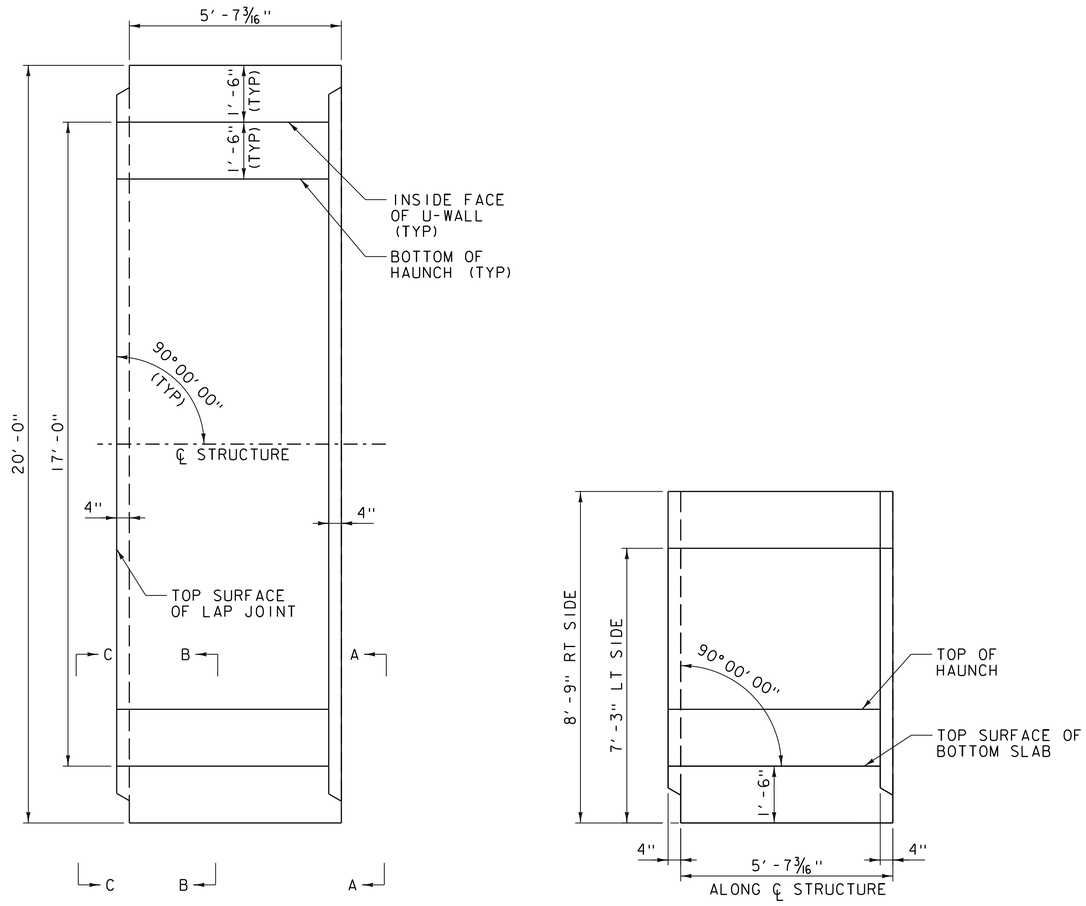

PLAN

SECTION ALONG CENTERLINE STRUCTURE

UNIQUE U-WALL PIECE DETAILS - TYPE AG

SCALE 1/2" = 1' - 0"

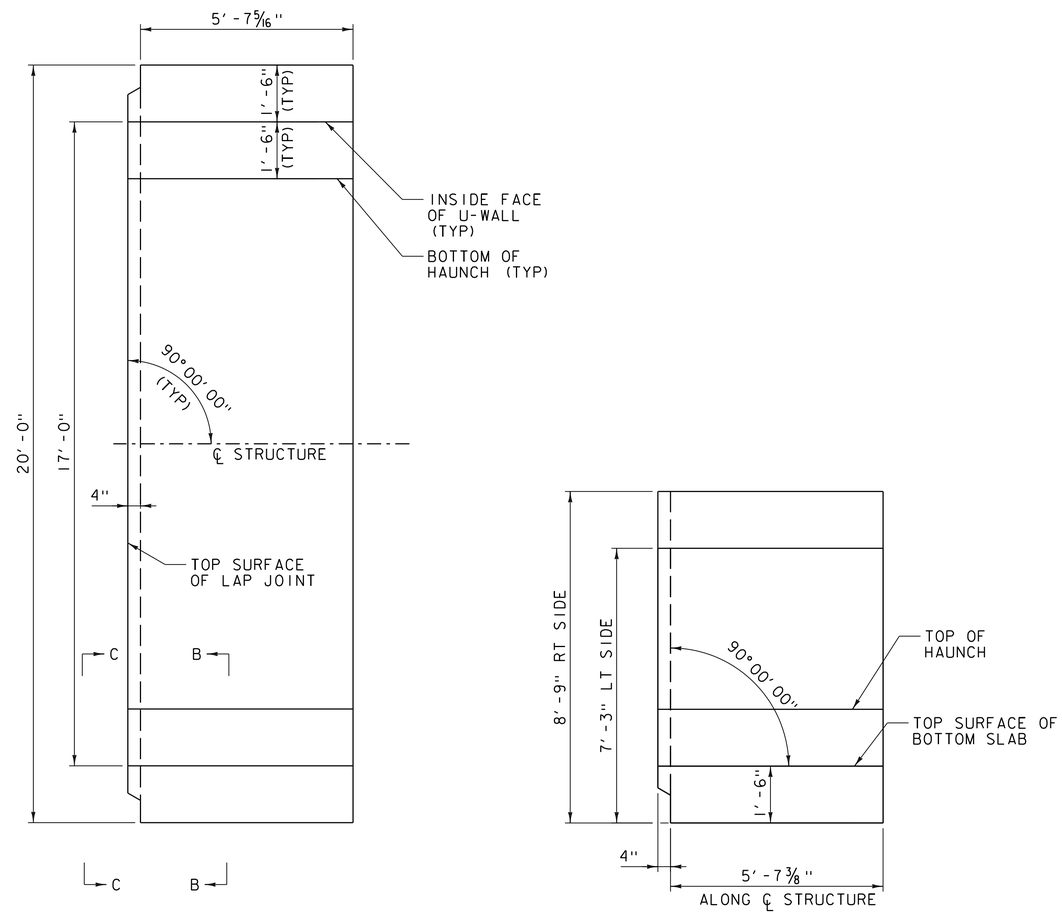

PLAN

SECTION ALONG CENTERLINE STRUCTURE

UNIQUE U-WALL PIECE DETAILS - TYPE AH

SCALE 1/2" = 1' - 0"

* DIMENSION PERPENDICULAR TO CENTERLINE OF JOINT.

NOTE:
SEE SOUTH U-WALL PIECE DETAILS (1 OF 9) FOR SECTION A-A, SECTION B-B, AND SECTION C-C.

PROJECT NAME: MIDDLEBURY	
PROJECT NUMBER: WCRS(23)	
FILE NAME: z13g542uwalldtl_north.dgn	PLOT DATE: 4/30/2019
PROJECT LEADER: A.P. GUYETTE	DRAWN BY: K.C. BARRY
DESIGNED BY: K.C. BARRY	CHECKED BY: R.H. BARNES
NORTH U-WALL PIECE DETAILS (15 OF 20)	SHEET 227 OF 328

VHB 57603

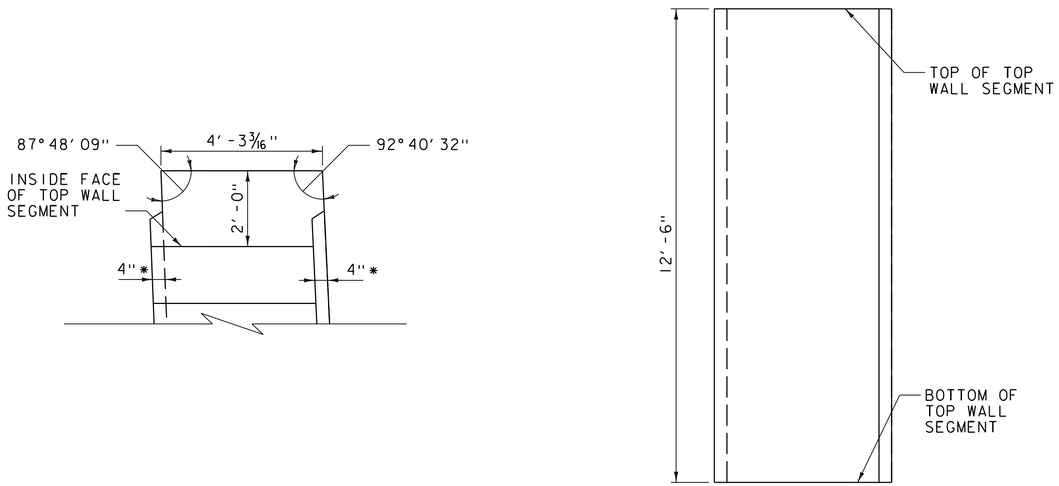

PLAN ELEVATION

UNIQUE TOP WALL SEGMENT PIECE DETAILS - TYPES AA

SCALE 1/2″=1′-0″

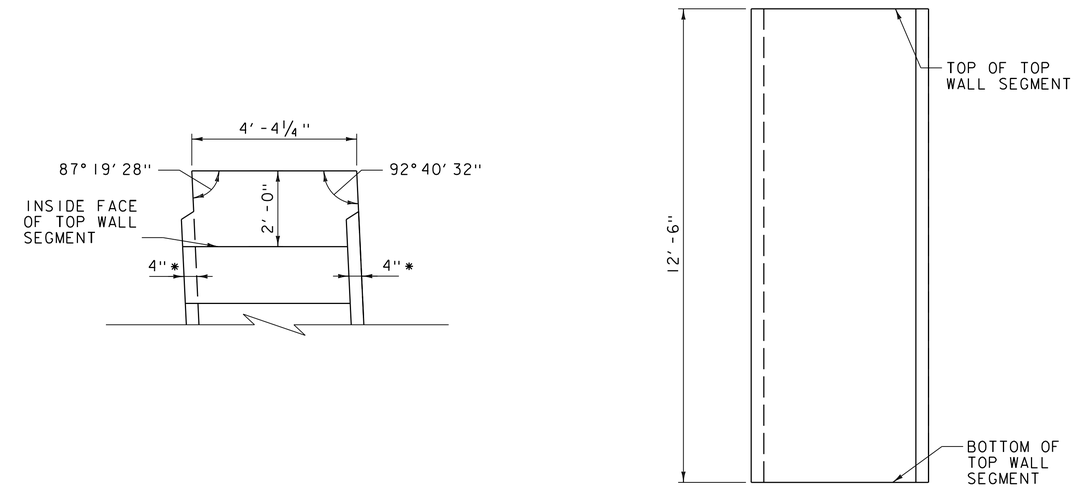

PLAN ELEVATION

UNIQUE TOP WALL SEGMENT PIECE DETAILS - TYPE BB

SCALE 1/2″=1′-0″

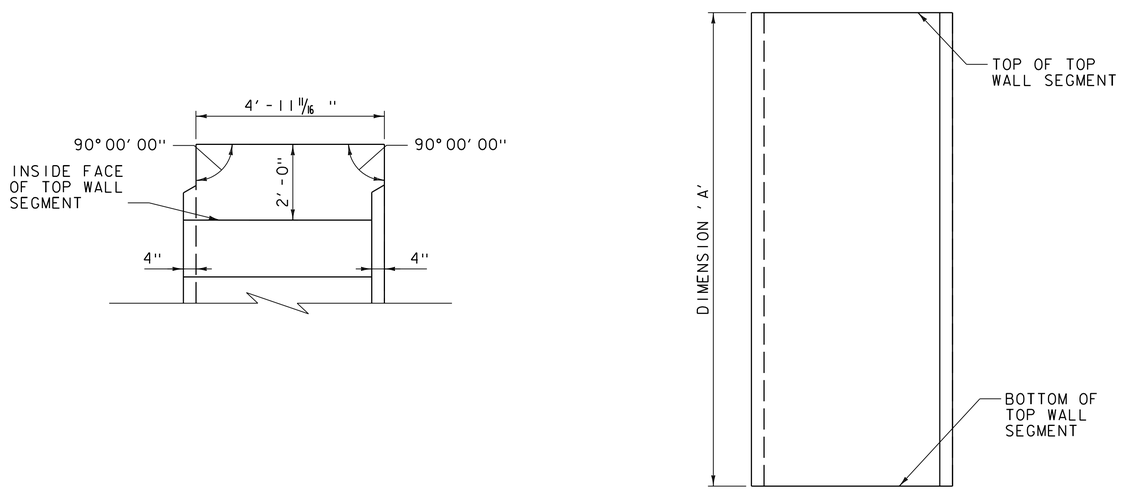

PLAN ELEVATION

UNIQUE TOP WALL SEGMENT PIECE DETAILS - TYPES CC, DD & GG

SCALE 1/2″=1′-0″

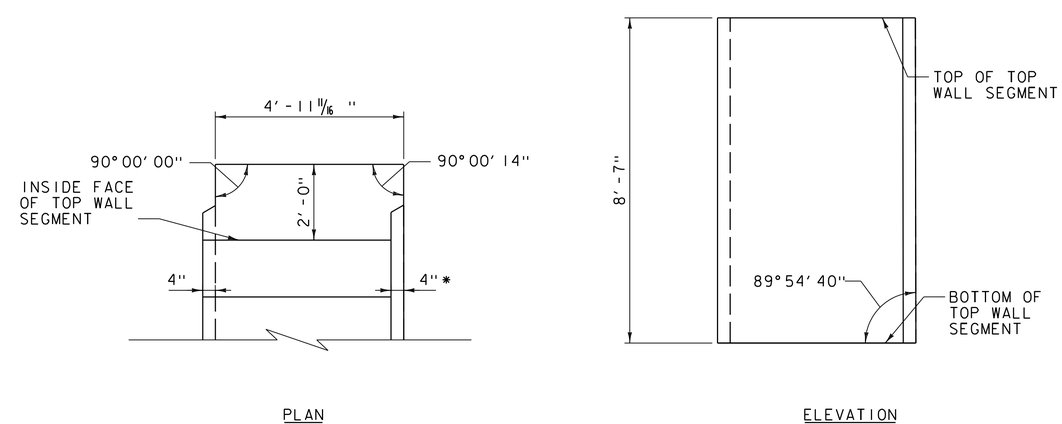

PLAN ELEVATION

UNIQUE TOP WALL SEGMENT PIECE DETAILS - TYPE EE

SCALE 1/2″=1′-0″

DIMENSION ′A′ TABLE - TYPES CC, DD & GG

UNIQUE PIECE TYPE	DIMENSION 'A'
TYPE CC	12'-6"
TYPE DD	8'-7"
TYPE GG	5'-2"

* DIMENSION PERPENDICULAR TO CENTERLINE OF JOINT.

PROJECT NAME: MIDDLEBURY
PROJECT NUMBER: WCRS(23)

FILE NAME: zl3g542uwalldtl_north.dgn
PROJECT LEADER: A.P. GUYETTE
DESIGNED BY: K.C. BARRY
NORTH U-WALL PIECE DETAILS (16 OF 20)

PLOT DATE: 4/30/2019
DRAWN BY: K.C. BARRY
CHECKED BY: R.H. BARNES
SHEET 228 OF 328

VHB 57603

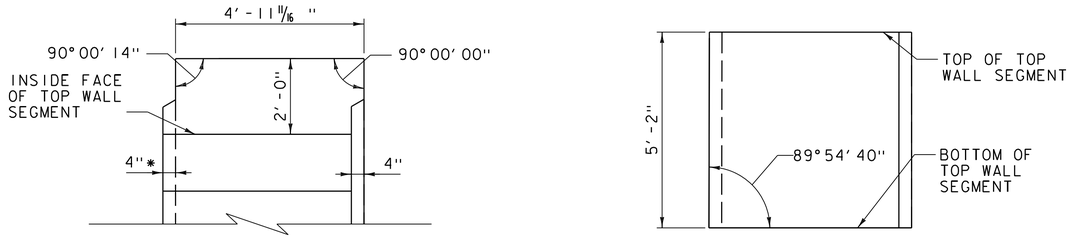

PLAN ELEVATION

UNIQUE TOP WALL SEGMENT PIECE DETAILS - TYPE FF

SCALE 1/2"=1'-0"

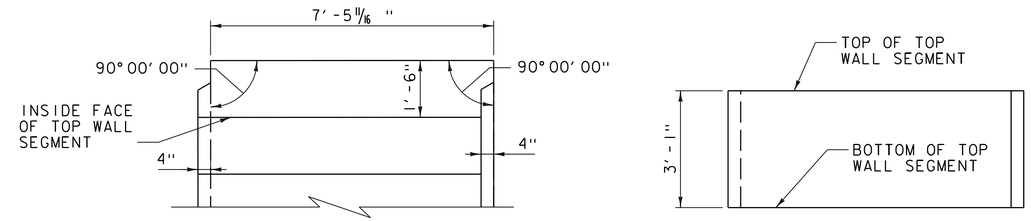

PLAN ELEVATION

UNIQUE TOP WALL SEGMENT PIECE DETAILS - TYPE HH

SCALE 1/2"=1'-0"

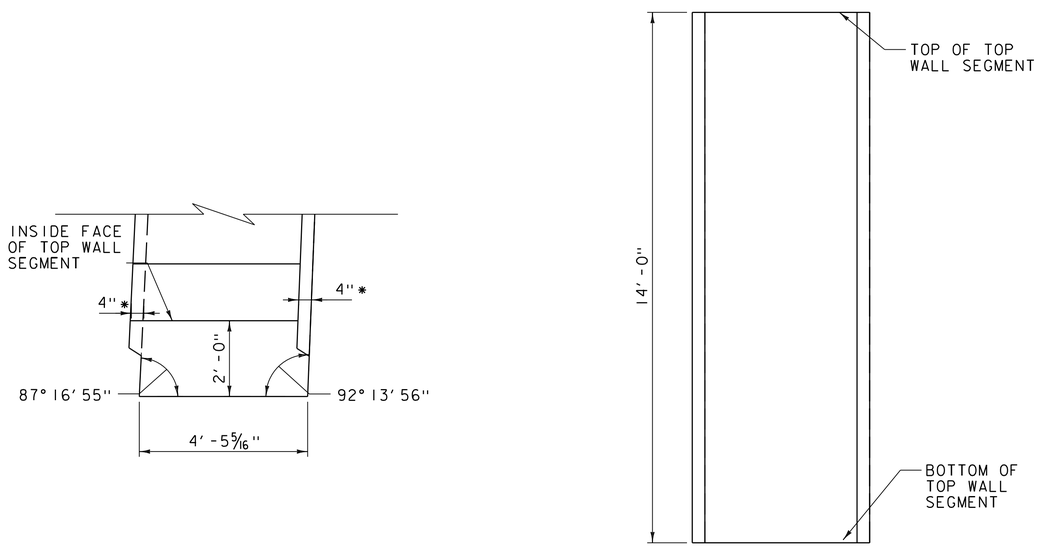

PLAN ELEVATION

UNIQUE TOP WALL SEGMENT PIECE DETAILS - TYPE II

SCALE 1/2"=1'-0"

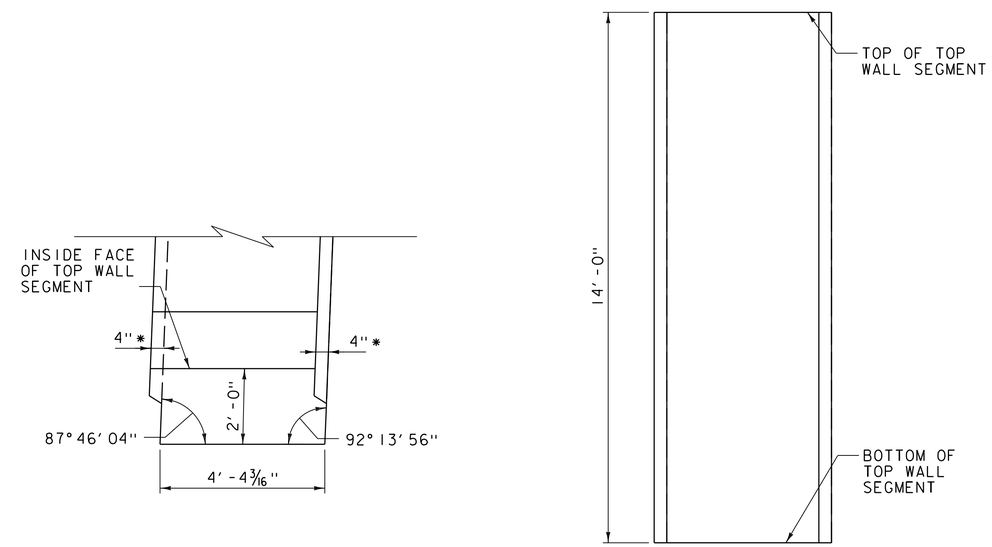

PLAN ELEVATION

UNIQUE TOP WALL SEGMENT PIECE DETAILS - TYPES JJ

SCALE 1/2"=1'-0"

* DIMENSION PERPENDICULAR TO CENTERLINE OF JOINT.

PROJECT NAME: MIDDLEBURY	
PROJECT NUMBER: WCRS(23)	
FILE NAME: zl3g542uwalldtl_north.dgn	PLOT DATE: 4/30/2019
PROJECT LEADER: A.P. GUYETTE	DRAWN BY: K.C. BARRY
DESIGNED BY: K.C. BARRY	CHECKED BY: R.H. BARNES
NORTH U-WALL PIECE DETAILS (17 OF 20)	SHEET 229 OF 328

VHB 57603

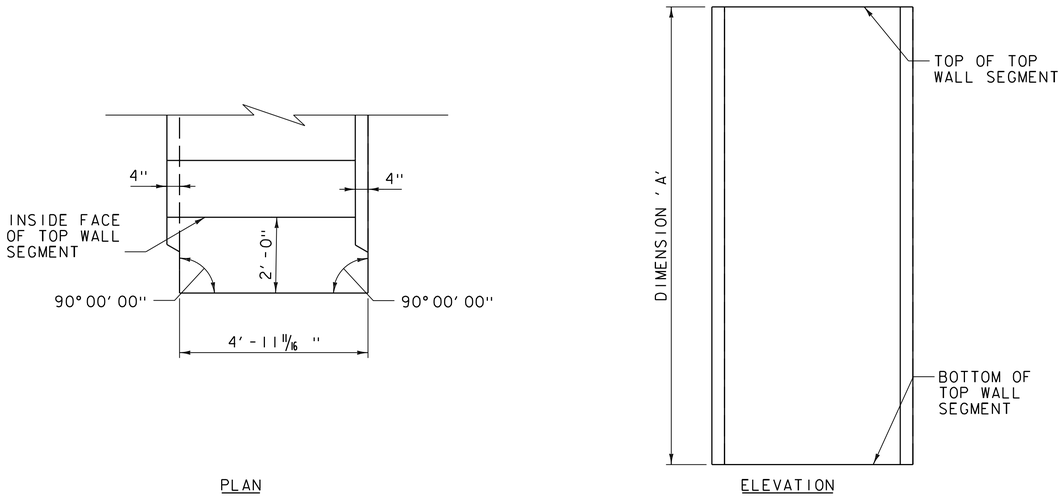

UNIQUE TOP WALL SEGMENT PIECE DETAILS - TYPES KK & NN

SCALE 1/2"=1'-0"

DIMENSION 'A' TABLE - TYPES KK & NN

UNIQUE PIECE TYPE	DIMENSION 'A'
TYPE KK	14-0"
TYPE NN	12'-1"

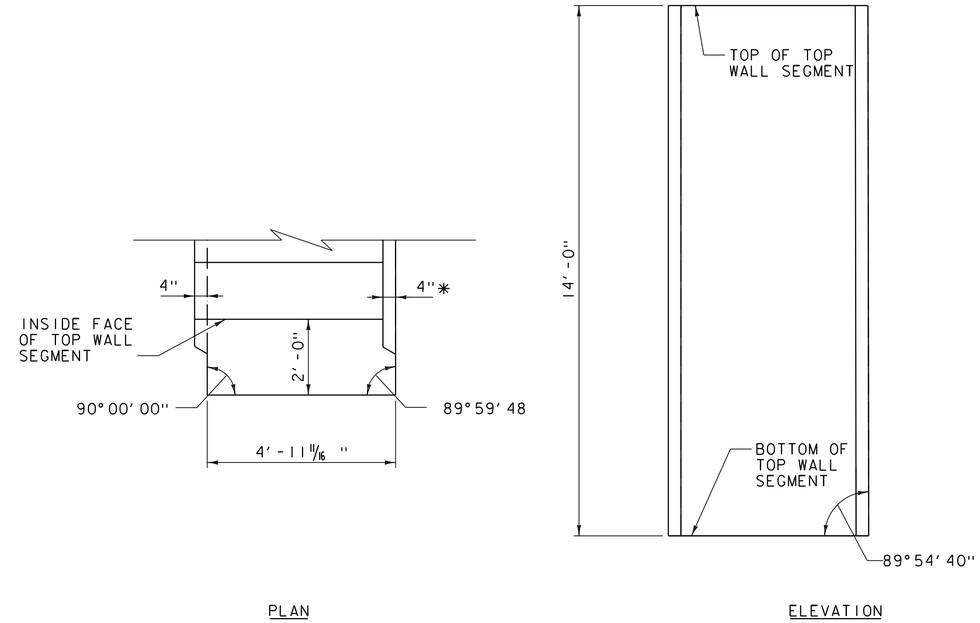

UNIQUE TOP WALL SEGMENT PIECE DETAILS - TYPE LL

SCALE 1/2"=1'-0"

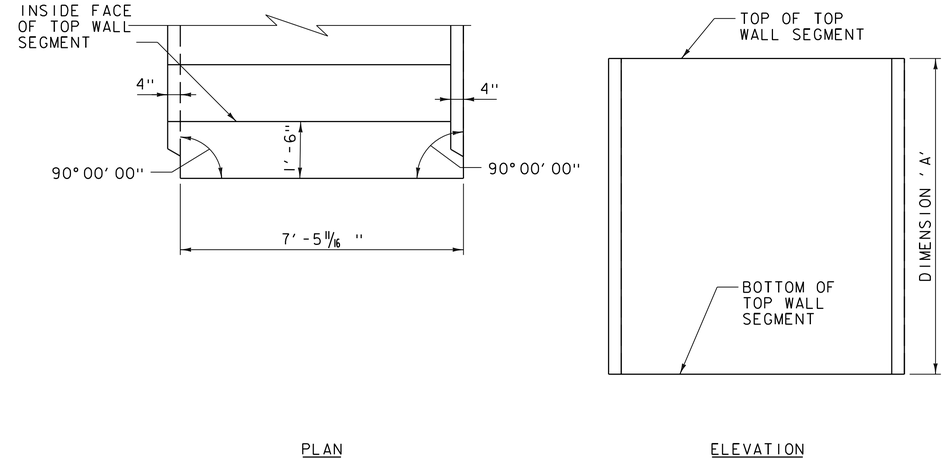

UNIQUE TOP WALL SEGMENT PIECE DETAILS - TYPE OO, RR, SS & TT

SCALE 1/2"=1'-0"

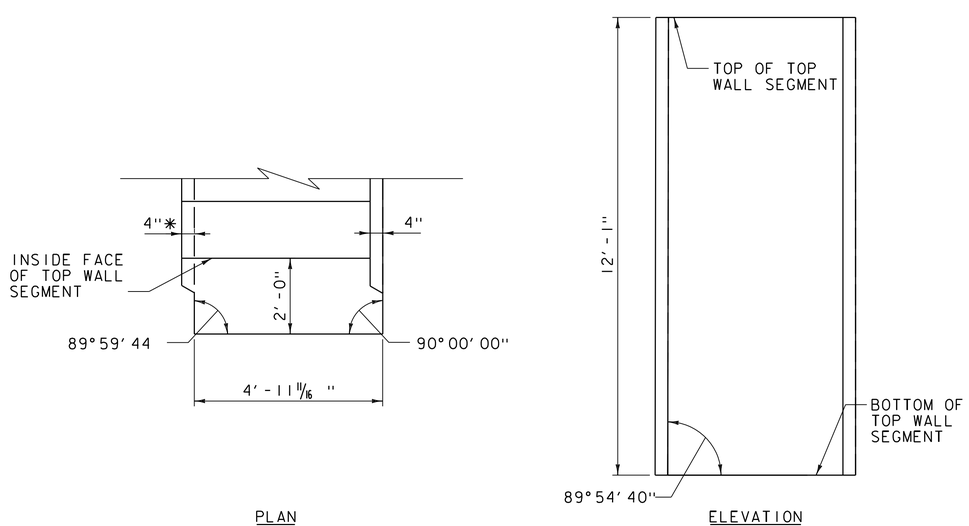

UNIQUE TOP WALL SEGMENT PIECE DETAILS - TYPE MM

SCALE 1/2"=1'-0"

DIMENSION 'A' TABLE - TYPES OO, RR, SS & TT

UNIQUE PIECE TYPE	DIMENSION 'A'
TYPE OO	8'-4"
TYPE RR	5'-1"
TYPE SS	3'-0"
TYPE TT	3'-9"

* DIMENSION PERPENDICULAR TO CENTERLINE OF JOINT.

PROJECT NAME: MIDDLEBURY
PROJECT NUMBER: WCRS(23)

FILE NAME: z13g542uwalldtl_north.dgn
PROJECT LEADER: A.P. GUYETTE
DESIGNED BY: K.C. BARRY
NORTH U-WALL PIECE DETAILS (18 OF 20)

PLOT DATE: 4/30/2019
DRAWN BY: K.C. BARRY
CHECKED BY: R.H. BARNES
SHEET 230 OF 328

VHB 57603

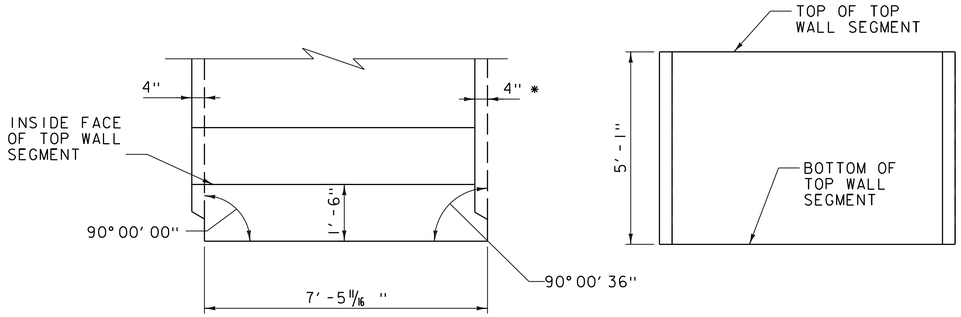

PLAN ELEVATION

UNIQUE TOP WALL SEGMENT PIECE DETAILS - TYPE PP

SCALE 1/2"=1'-0"

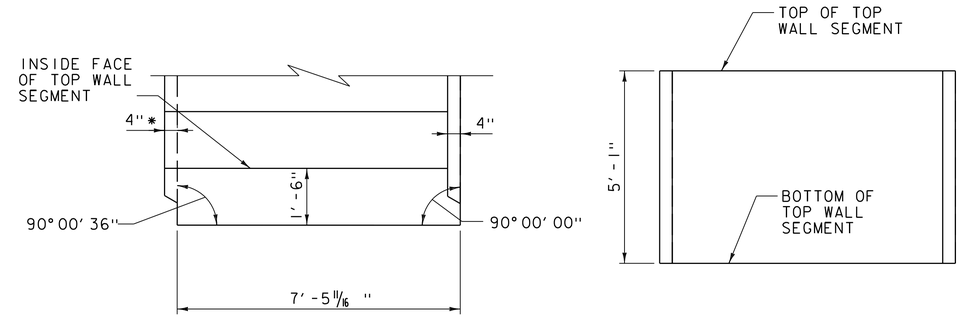

PLAN ELEVATION

UNIQUE TOP WALL SEGMENT PIECE DETAILS - TYPE QQ

SCALE 1/2"=1'-0"

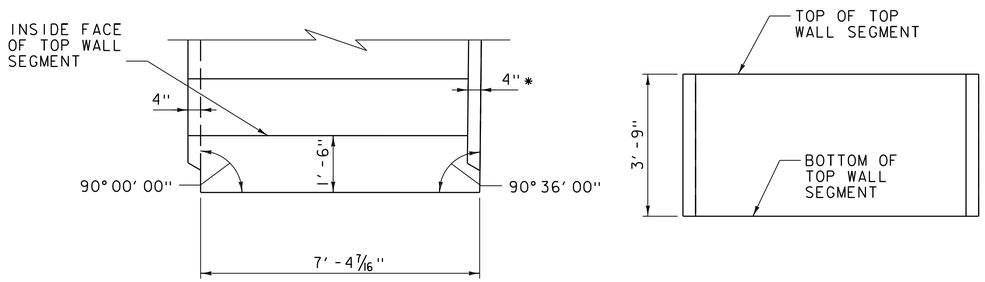

PLAN ELEVATION

UNIQUE TOP WALL SEGMENT PIECE DETAILS - TYPE UU

SCALE 1/2"=1'-0"

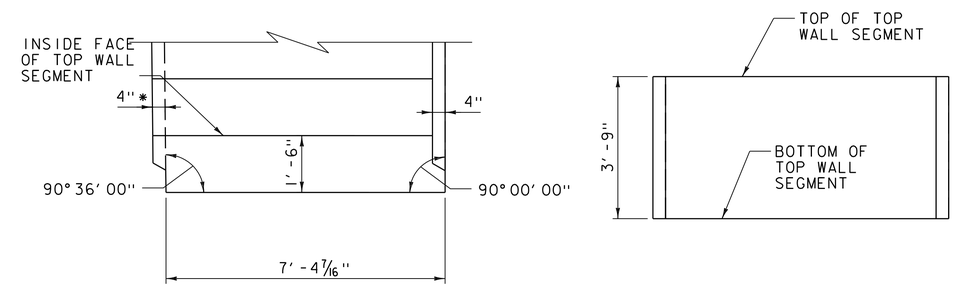

PLAN ELEVATION

UNIQUE TOP WALL SEGMENT PIECE DETAILS - TYPE VV

SCALE 1/2"=1'-0"

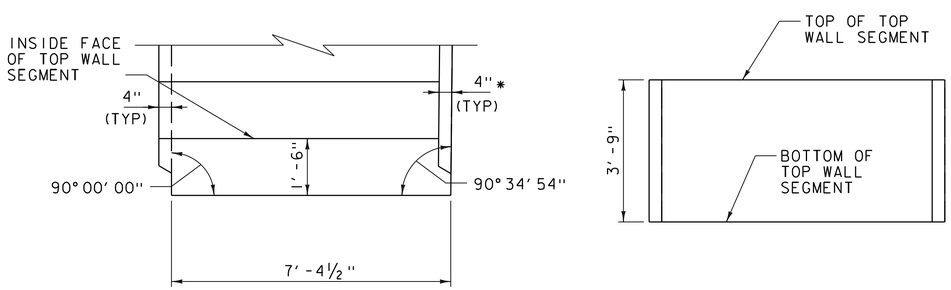

PLAN ELEVATION

UNIQUE TOP WALL SEGMENT PIECE DETAILS - TYPE WW

SCALE 1/2"=1'-0"

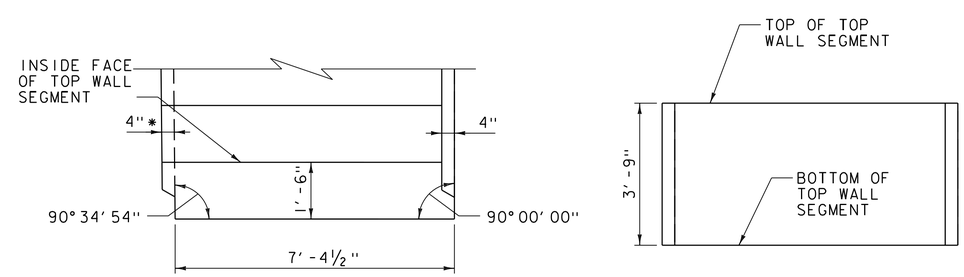

PLAN ELEVATION

UNIQUE TOP WALL SEGMENT PIECE DETAILS - TYPE XX

SCALE 1/2"=1'-0"

* DIMENSION PERPENDICULAR TO CENTERLINE OF JOINT.

PROJECT NAME: MIDDLEBURY	
PROJECT NUMBER: WCRS(23)	
FILE NAME: zl3g542uwalldtl_north.dgn	PLOT DATE: 4/30/2019
PROJECT LEADER: A.P. GUYETTE	DRAWN BY: K.C. BARRY
DESIGNED BY: K.C. BARRY	CHECKED BY: R.H. BARNES
NORTH U-WALL PIECE DETAILS (19 OF 20)	SHEET 231 OF 328

VHB 57603

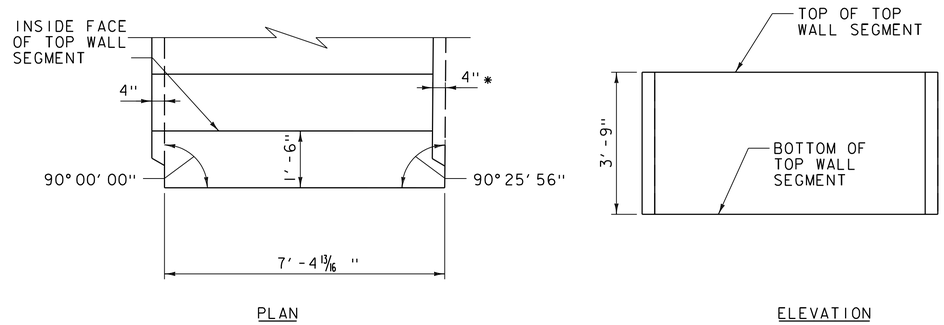

UNIQUE TOP WALL SEGMENT PIECE DETAILS - TYPE YY

SCALE 1/2"=1'-0"

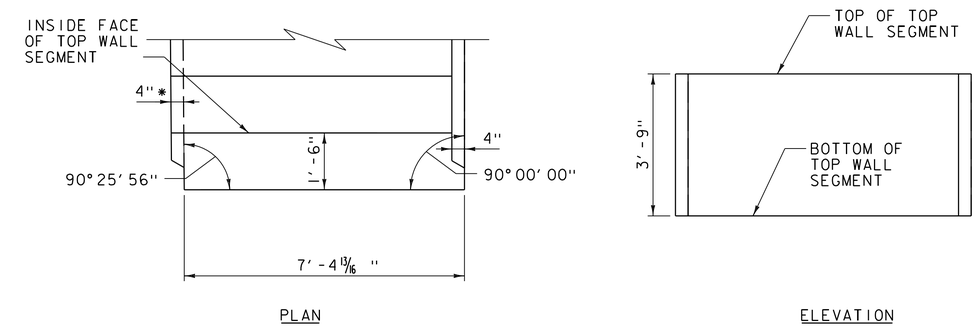

UNIQUE TOP WALL SEGMENT PIECE DETAILS - TYPE ZZ

SCALE 1/2"=1'-0"

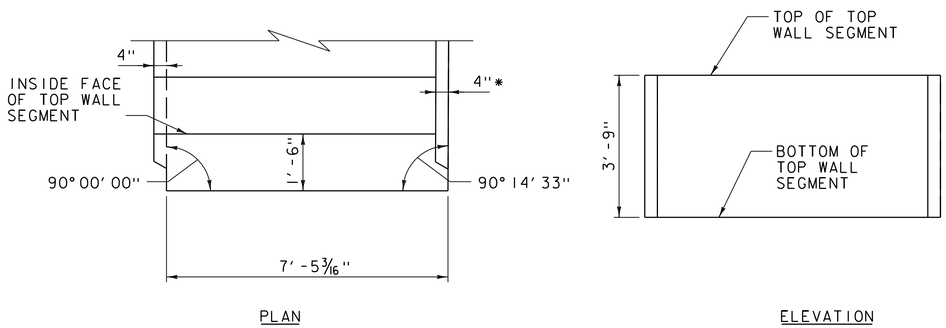

UNIQUE TOP WALL SEGMENT PIECE DETAILS - TYPE AAA

SCALE 1/2"=1'-0"

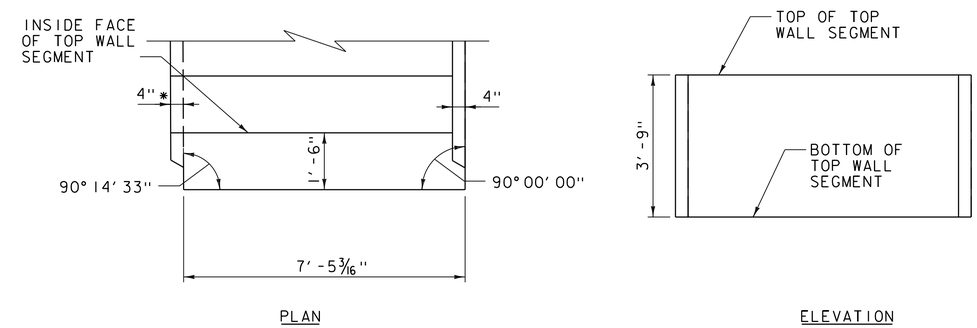

UNIQUE TOP WALL SEGMENT PIECE DETAILS - TYPE BBB

SCALE 1/2"=1'-0"

* DIMENSION PERPENDICULAR TO CENTERLINE OF JOINT.

PROJECT NAME: MIDDLEBURY	
PROJECT NUMBER: WCRS(23)	
FILE NAME: zl3g542uwalldtl_north.dgn	PLOT DATE: 4/30/2019
PROJECT LEADER: A.P. GUYETTE	DRAWN BY: K.C. BARRY
DESIGNED BY: K.C. BARRY	CHECKED BY: R.H. BARNES
NORTH U-WALL PIECE DETAILS (20 OF 20)	SHEET 232 OF 328

VHB 57603

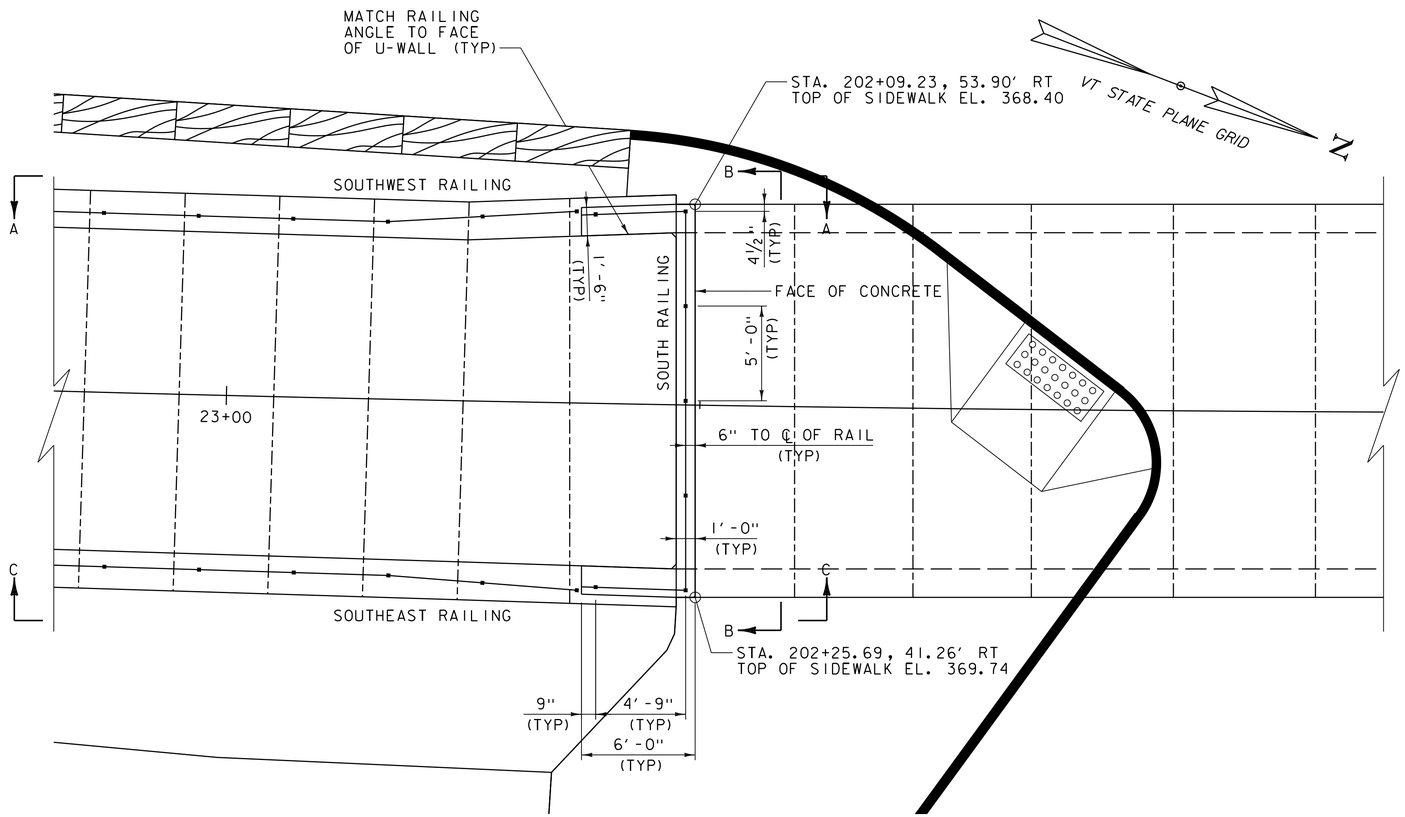

SOUTH END RAILING PLAN

SCALE 1/4" = 1'-0"

NOTES

1. SEE BRIDGE RAIL DETAILS SHEET FOR ADDITIONAL INFORMATION.
2. JOINTS BETWEEN PRECAST CONCRETE U-WALL SEGMENTS NOT SHOWN FOR CLARITY.

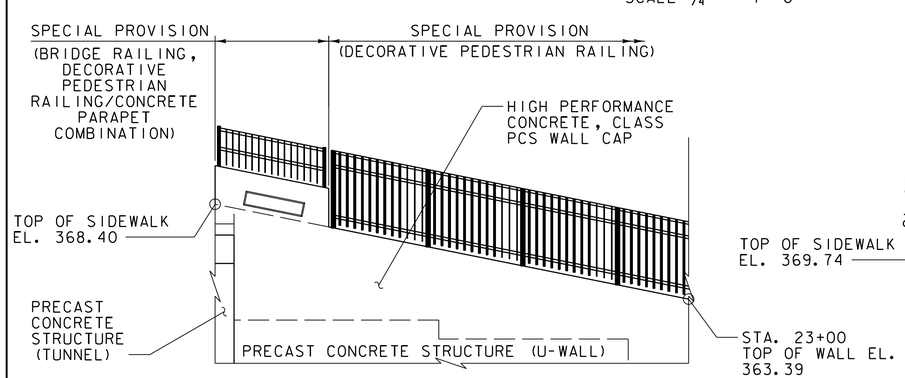

SOUTHWEST RAILING ELEVATION (SECTION A-A)

SCALE 1/4" = 1'-0"

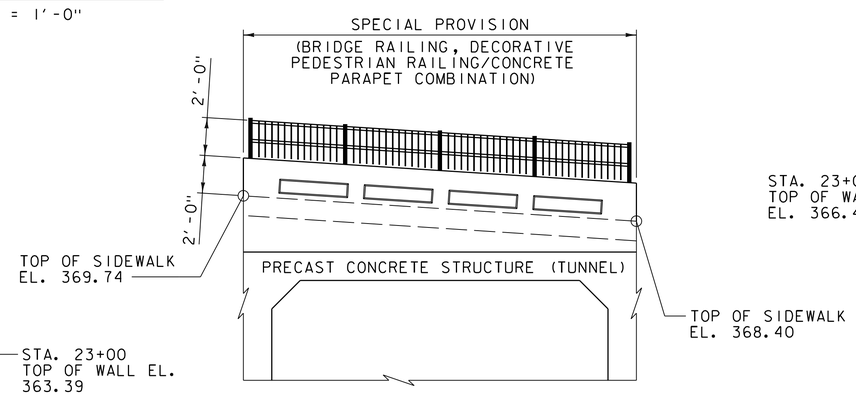

SOUTH RAILING ELEVATION (SECTION B-B)

SCALE 1/4" = 1'-0"

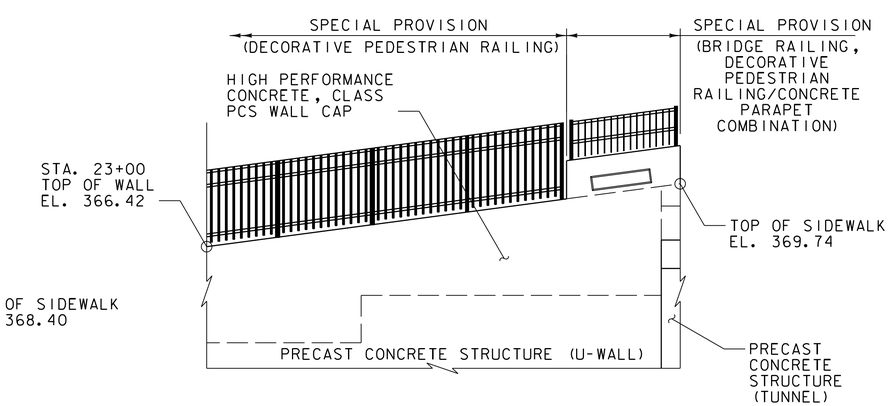

SOUTHEAST RAILING ELEVATION (SECTION C-C)

SCALE 1/4" = 1'-0"

PROJECT NAME: MIDDLEBURY	
PROJECT NUMBER: WCRS(23)	
FILE NAME: zl3g542tunnelendsouth.dgn	PLOT DATE: 4/30/2019
PROJECT LEADER: A.P. GUYETTE	DRAWN BY: R.H. BARNES
DESIGNED BY: R.H. BARNES	CHECKED BY: K.C. BARRY
SOUTH TUNNEL END RAILING DETAILS	SHEET 233 OF 328

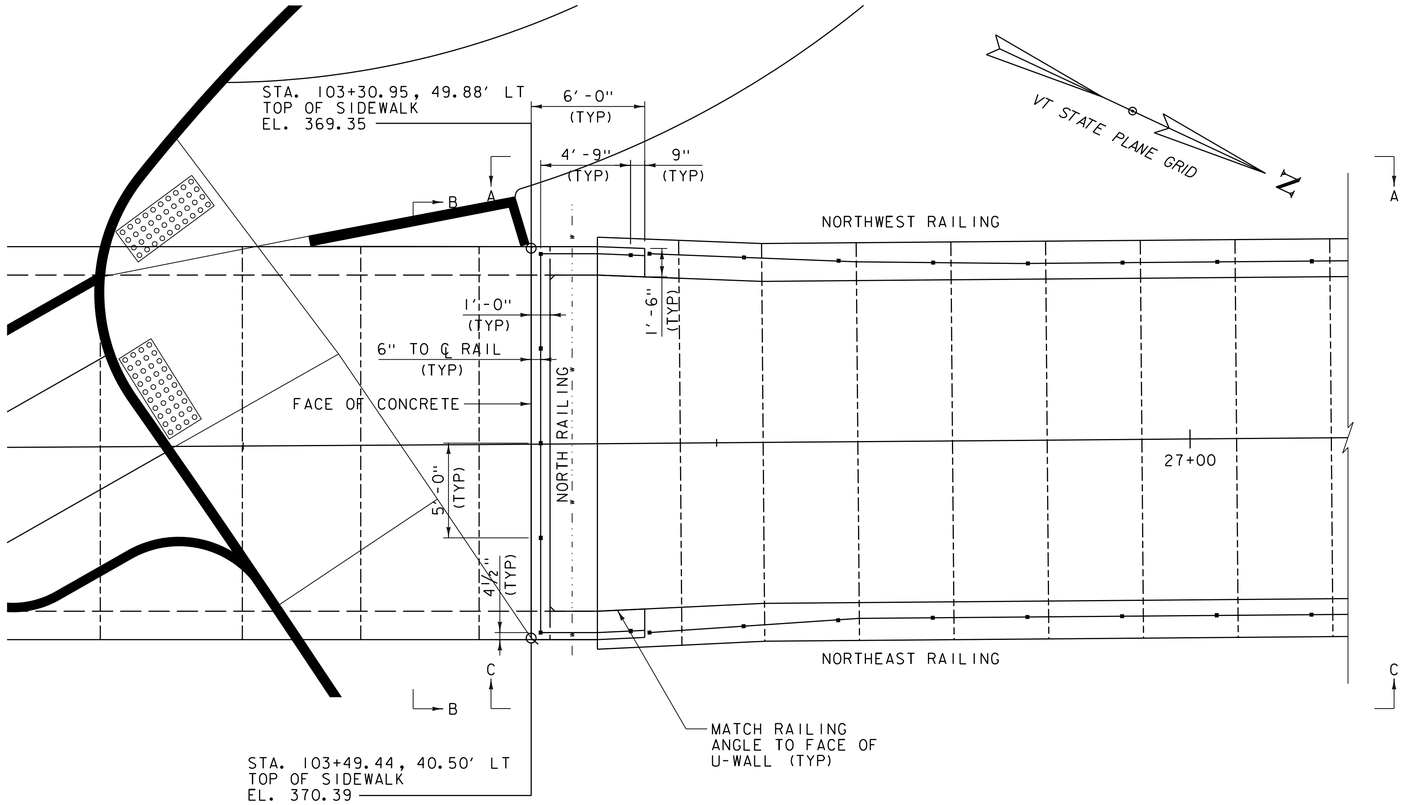

NORTH END RAILING PLAN

SCALE 1/4" = 1'-0"

NOTES

1. SEE BRIDGE RAIL DETAIL SHEET FOR ADDITIONAL INFORMATION.
2. JOINTS BETWEEN PRECAST CONCRETE U-WALL SEGMENTS NOT SHOWN FOR CLARITY.

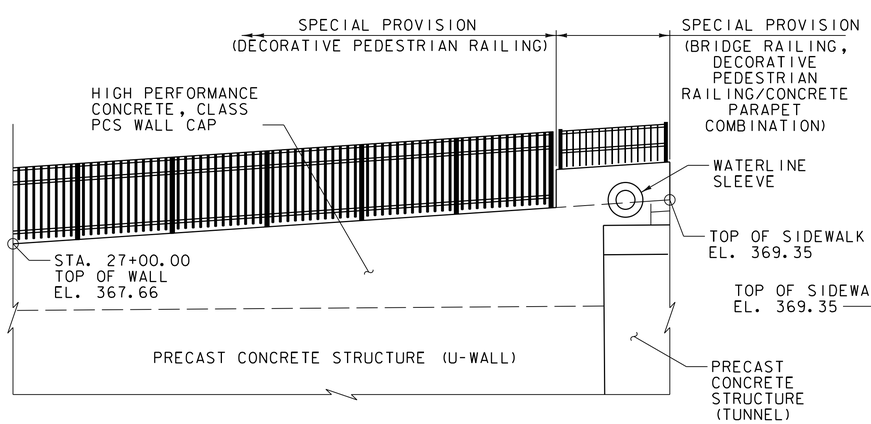

NORTHWEST RAILING ELEVATION (SECTION A-A)

SCALE 1/4" = 1'-0"

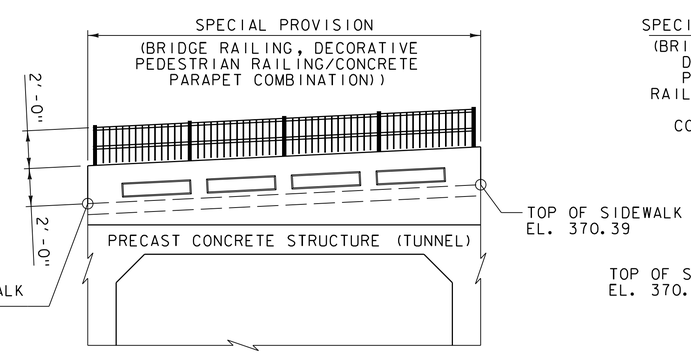

NORTH RAILING ELEVATION (SECTION B-B)

SCALE 1/4" = 1'-0"

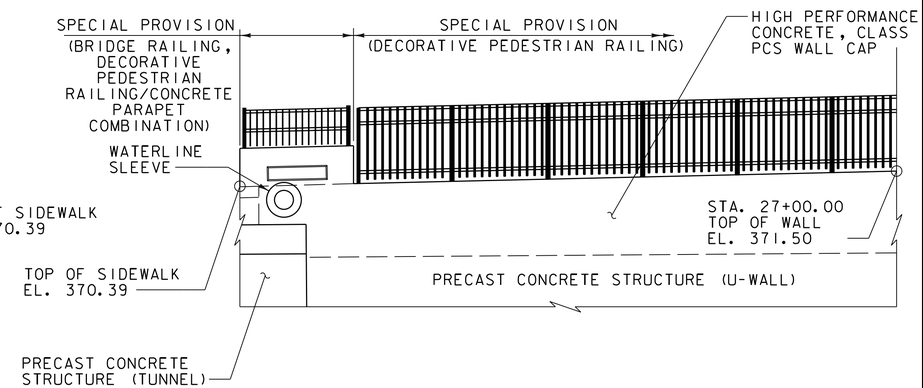

NORTHEAST RAILING ELEVATION (SECTION C-C)

SCALE 1/4" = 1'-0"

PROJECT NAME: MIDDLEBURY	
PROJECT NUMBER: WCRS(23)	
FILE NAME: zl3g542tunnelendnorth.dgn	PLOT DATE: 4/30/2019
PROJECT LEADER: A.P. GUYETTE	DRAWN BY: K.C. BARRY
DESIGNED BY: R.H. BARNES	CHECKED BY: R.H. BARNES
NORTH TUNNEL END RAILING DETAILS	SHEET 234 OF 328

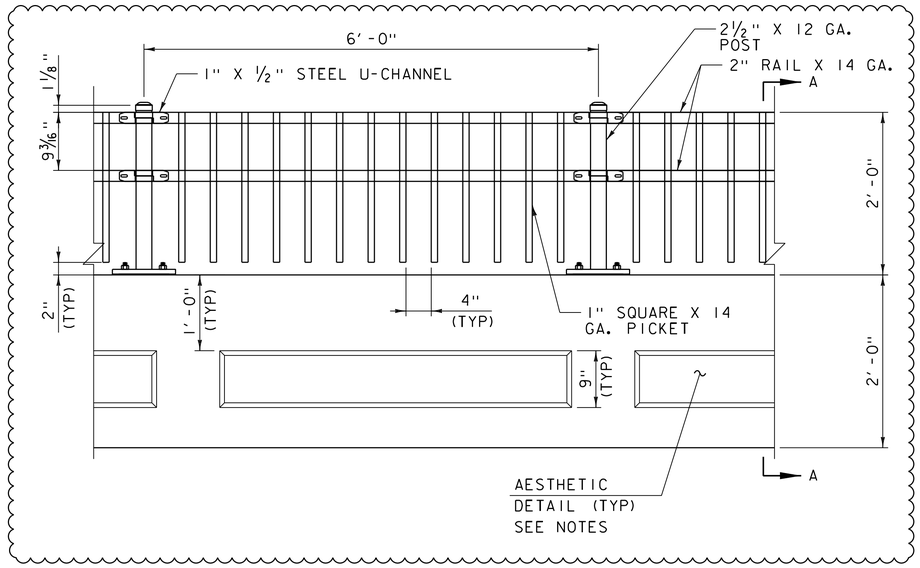

RAILING ELEVATION

SCALE: 1" = 1'-0"

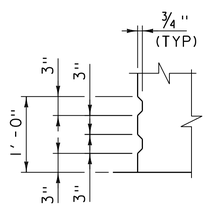

AESTHETIC DETAIL A

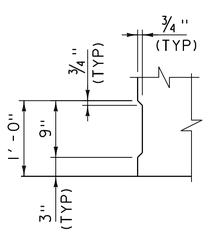

AESTHETIC DETAIL B

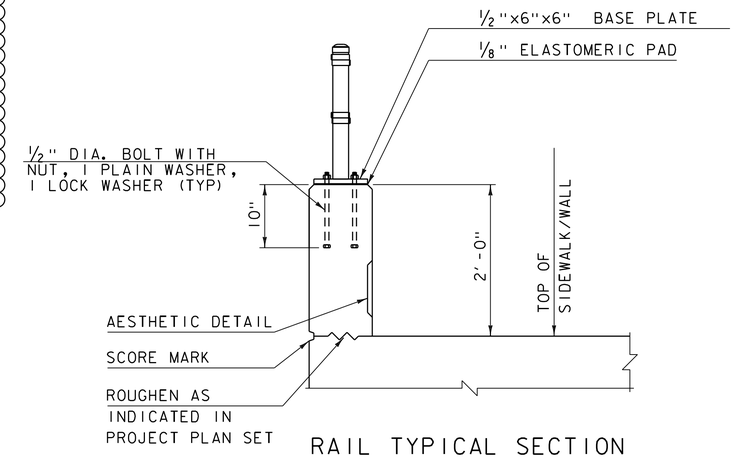

RAIL TYPICAL SECTION

NOT TO SCALE

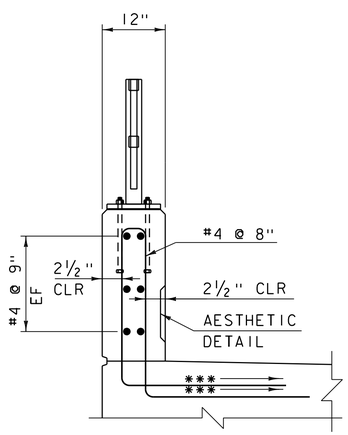

SECTION A-A

NOT TO SCALE

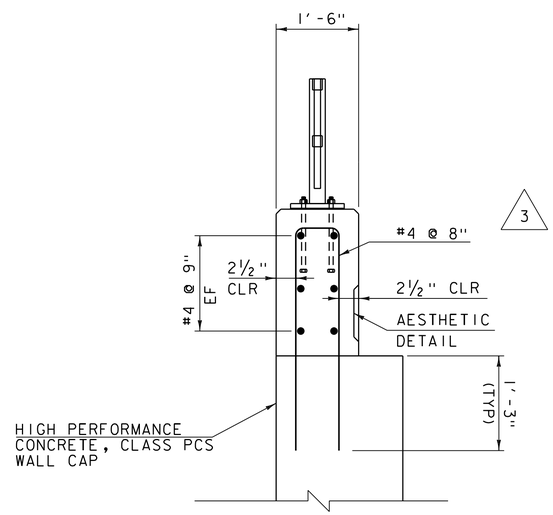

RAIL REINFORCING SECTION - TOP OF WALL

NOT TO SCALE

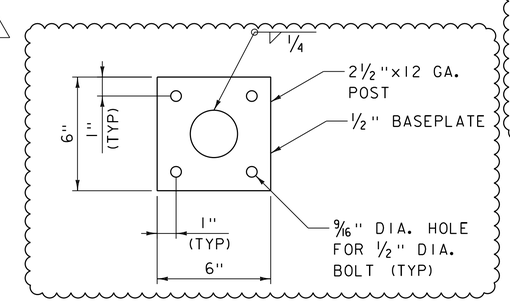

BASE PLATE DETAIL

NOT TO SCALE

NOTE:
EF = EACH FACE
3" CLEAR, UNLESS OTHERWISE SPECIFIED ON THE PLANS.
2'-2" BAR LAP UNLESS OTHERWISE SPECIFIED ON THE PLANS.
*** MATCH SLOPE OF NEAREST TRANSVERSE STEEL

NOTES:

1. ALL POSTS SHALL BE SET VERTICAL.
2. BRIDGE RAILING SHALL HAVE A RUBBED FINISH IN ACCORDANCE WITH SECTION 501.
3. ANCHOR BOLTS, WASHERS, AND HEAVY HEX NUTS SHALL BE ONE OF THE FOLLOWING: ASTM A449 OR AASHTO M164 GALV. TO AASHTO M232.
4. POSTS AND SPINDLES SHALL CONFORM TO AASHTO M270, GR 36.
5. STRUCTURAL TUBING RAILS SHALL CONFORM TO ASTM A-500, GRADE B.
6. WELDING SHALL MEET THE REQUIREMENTS OF SECTION 506.10 OF THE STANDARD SPECIFICATIONS.
7. UNLESS OTHERWISE NOTED, ANCHOR BOLTS ARE SCREWED INTO GALV. INSERTS CAST INTO THE PRE-CAST CONCRETE SLABS.
8. WHEREVER FEASIBLE, THE HAND RAIL SECTIONS SHALL BE FULL LENGTH.
9. VARIATIONS OF THE DETAILS SHOWN MAY BE CONSIDERED, PROVIDED THAT THEY HAVE THE SAME STRENGTH AS THE SYSTEM SHOW.
10. CUT EDGES SHALL BE GROUND FREE OF BURRS AND RAGGED EDGES. EXPOSED ENDS, IF ANY, SHALL BE COPED.
11. POSTS SHALL BE INSTALLED VERTICAL.
12. PEDESTRIAN RAILING WILL BE PAID FOR UNDER ITEM 900.640 "SPECIAL PROVISION (DECORATIVE PEDESTRIAN RAILING)".
13. ALL MATERIALS PROVIDED UNDER ITEM 900.640 "SPECIAL PROVISION (DECORATIVE PEDESTRIAN RAILING)" SHALL BE PAINTED IN ACCORDANCE WITH SUBSECTION 708.03 OF THE SPECIFICATIONS. NO GREASING OF THE PAINTED STEEL IS REQUIRED. THE FINAL COLOR OF THESE ITEMS WILL BE BLACK.
14. ALL PAINTING SHALL BE DONE UNDER SHOP CONDITIONS.
15. PAYMENT FOR THE PREPARATION, CONTAINMENT, PAINTING, AND ANY TESTING OF THE COATINGS WILL BE INCLUDED IN THE PAY ITEM LISTED IN NOTE 11 AND SHALL NOT BE PAID FOR SEPARATELY.
16. 6'-0" POST SPACING SHOWN. CONTRACTOR MAY SUBMIT ALTERNATIVE FOR APPROVAL.

REVISION	DATE	DESCRIPTION	BY
1	5/17/2019	UPDATED RAILING DETAILS TO 6'-0" POST SPACING.	KCB
2	5/17/2019	UPDATED NOTES.	KCB
3	5/17/2019	CHANGED TO ROUND POST IN BASE PLATE DETAIL	KCB

PROJECT NAME: MIDDLEBURY
PROJECT NUMBER: WCRS(23)

FILE NAME: z13g542braildtl.dgn
PROJECT LEADER: A.P. GUYETTE
DESIGNED BY: R.H. BARNES
BRIDGE RAIL DETAILS

PLOT DATE: 5/17/2019
DRAWN BY: R.H.BARNES
CHECKED BY: K.C. BARRY
SHEET 235 OF 328

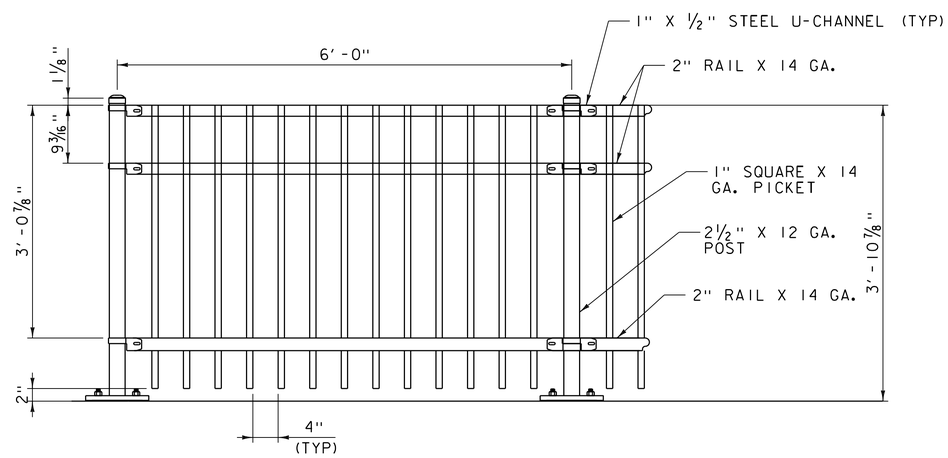

PANEL DETAIL

SCALE 1" = 1'-0"

NOTES

1. ANCHOR BOLTS, WASHERS, AND HEAVY HEX NUTS SHALL BE ONE OF THE FOLLOWING: ASTM A449 OR AASHTO M164 GALV. TO AASHTO M232.
2. POSTS AND SPINDLES SHALL CONFORM TO AASHTO M270, GR 36.
3. STRUCTURAL TUBING RAILS SHALL CONFORM TO ASTM A-500, GRADE B.
4. WELDING SHALL MEET THE REQUIREMENTS OF SECTION 506.10 OF THE STANDARD SPECIFICATIONS.
5. UNLESS OTHERWISE NOTED, ANCHOR BOLTS ARE SCREWED INTO GALV. INSERTS CAST INTO THE PRE-CAST CONCRETE SLABS.
6. WHEREVER FEASIBLE, THE HAND RAIL SECTIONS SHALL BE FULL LENGTH.
7. VARIATIONS OF THE DETAILS SHOWN MAY BE CONSIDERED, PROVIDED THAT THEY HAVE THE SAME STRENGTH AS THE SYSTEM SHOW.
8. CUT EDGES SHALL BE GROUND FREE OF BURRS AND RAGGED EDGES. EXPOSED ENDS, IF ANY, SHALL BE COPED.
9. POSTS SHALL BE INSTALLED VERTICAL.
10. PEDESTRIAN RAILING WILL BE PAID FOR UNDER ITEM 900.640 "SPECIAL PROVISION (DECORATIVE PEDESTRIAN RAILING)".
11. ALL MATERIALS PROVIDED UNDER ITEM 900.640 "SPECIAL PROVISION (DECORATIVE PEDESTRIAN RAILING)" SHALL BE PAINTED IN ACCORDANCE WITH SUBSECTION 708.03 OF THE SPECIFICATIONS. NO GREASING OF THE PAINTED STEEL IS REQUIRED. THE FINAL COLOR OF THESE ITEMS WILL BE BLACK.
12. ALL PAINTING SHALL BE DONE UNDER SHOP CONDITIONS.
13. PAYMENT FOR THE PREPARATION, CONTAINMENT, PAINTING, AND ANY TESTING OF THE COATINGS WILL BE INCLUDED IN THE PAY ITEM LISTED IN NOTE 11 AND SHALL NOT BE PAID FOR SEPARATELY.
14. 6'-0" POST SPACING SHOWN. CONTRACTOR MAY SUBMIT ALTERNATIVE FOR APPROVAL.

REVISION	DATE	DESCRIPTION	BY
1	5/17/2019	UPDATED RAILING DETAILS TO 6'-0" POST SPACING AND BASE PLATE CONNECTION.	KCB

PROJECT NAME: MIDDLEBURY

PROJECT NUMBER: WCRS(23)

FILE NAME: zl3g542braildt2.dgn
PROJECT LEADER: A.P. GUYETTE
DESIGNED BY: K.C. BARRY
DECORATIVE PEDESTRIAN RAILING DETAILS

PLOT DATE: 5/17/2019
DRAWN BY: K.C. BARRY
CHECKED BY: VHB
SHEET 236 OF 328

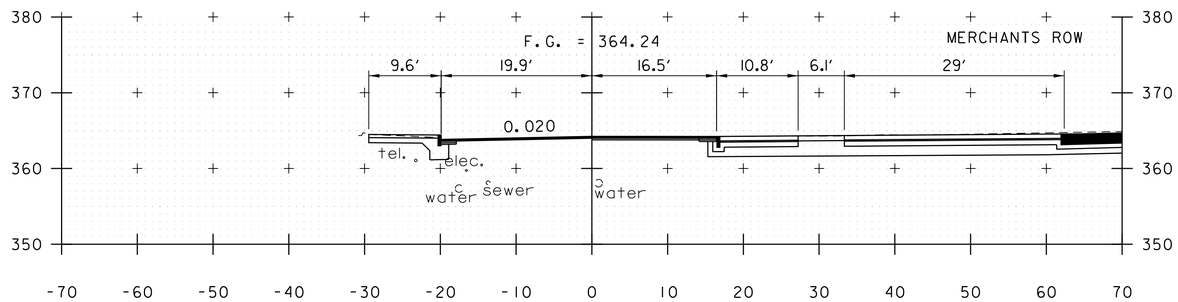

101+25

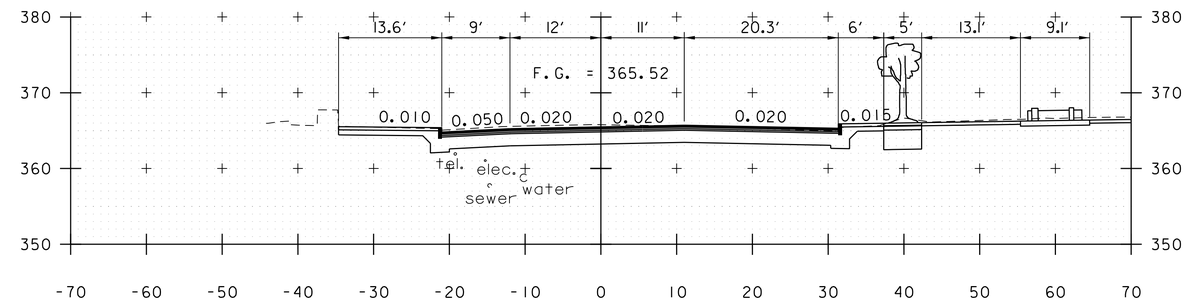

102+00

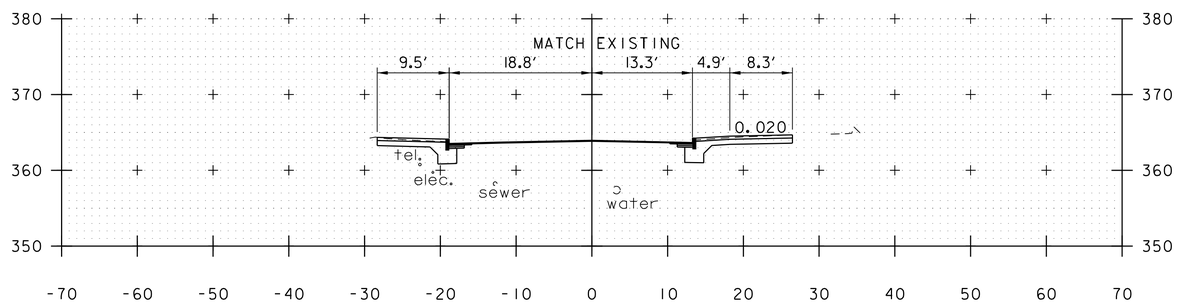

101+00
BEGIN APPROACH
STA. 100+85.00

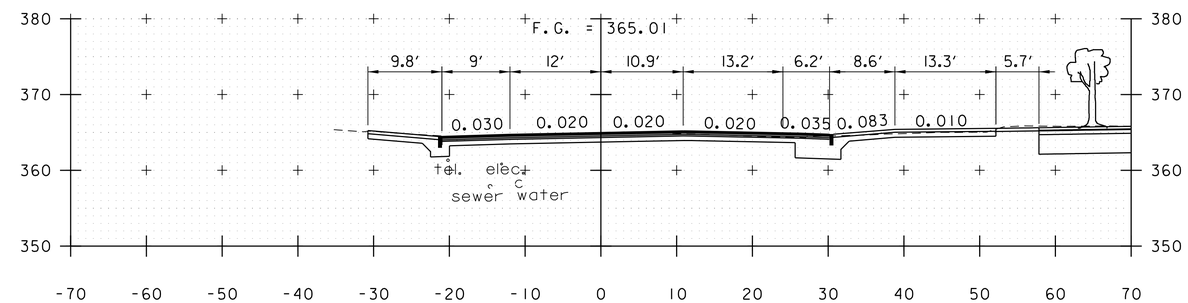

101+75

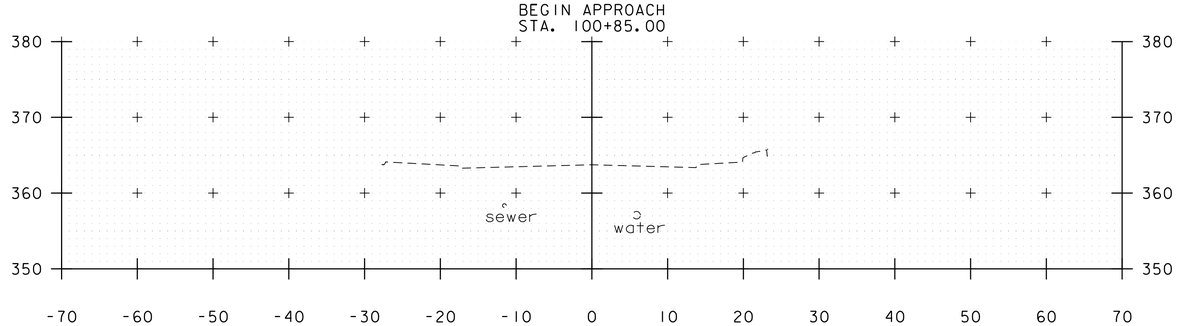

100+75

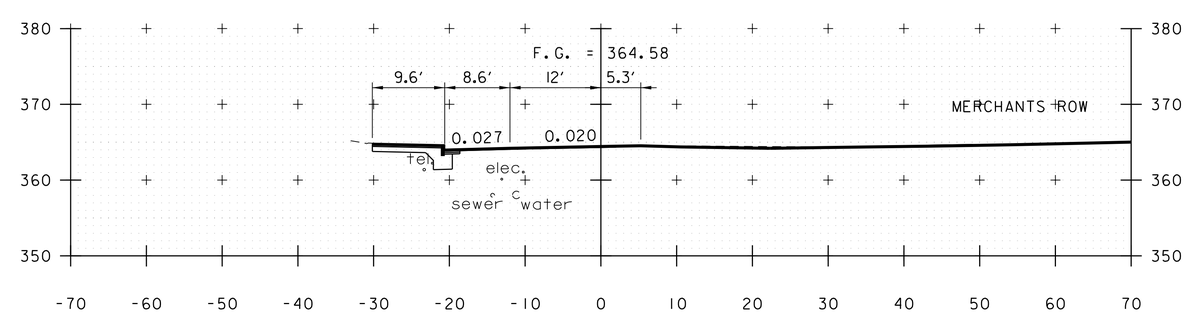

101+50

MAIN ST CROSS SECTIONS

STA. 100+75 - 102+00
SCALE 1" = 10′-0"

vhb

PROJECT NAME: MIDDLEBURY	
PROJECT NUMBER: WCRS(23)	
FILE NAME: zl3g542xs.dgn	PLOT DATE: 4/30/2019
PROJECT LEADER: A.P. GUYETTE	DRAWN BY: D.M.PECK
DESIGNED BY: D.M.PECK	CHECKED BY: S.E. BURBANK
MAIN ST CROSS SECTIONS (1 OF 4)	SHEET 237 OF 328

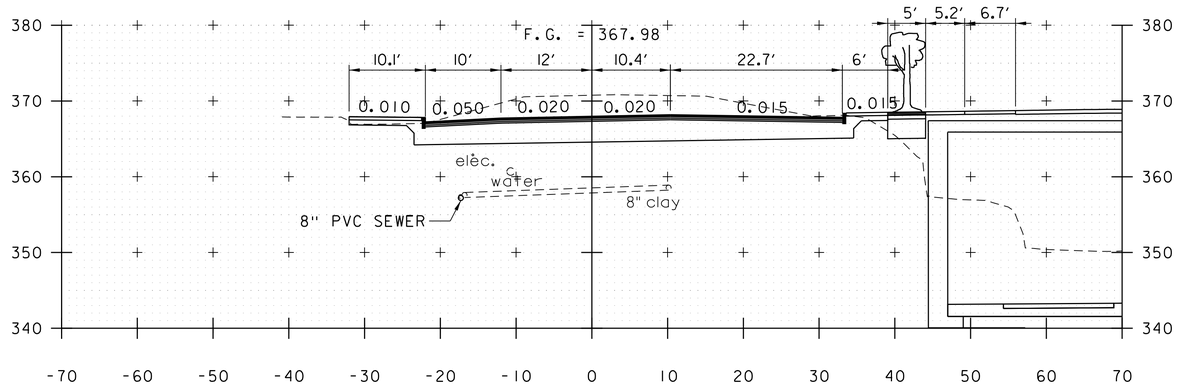

102+75

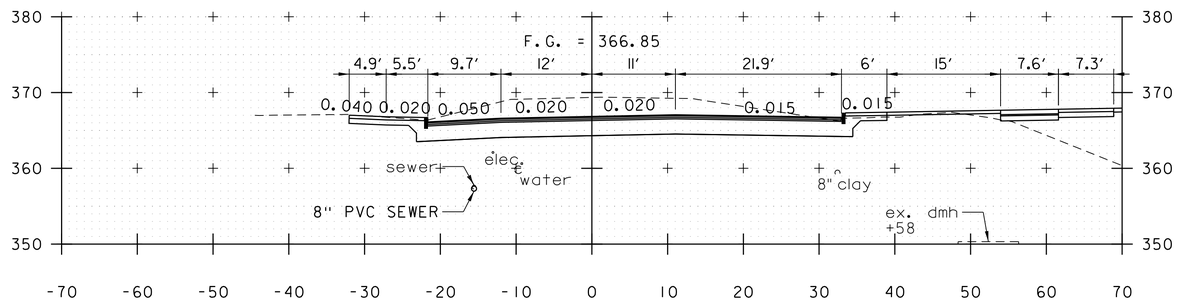

102+50

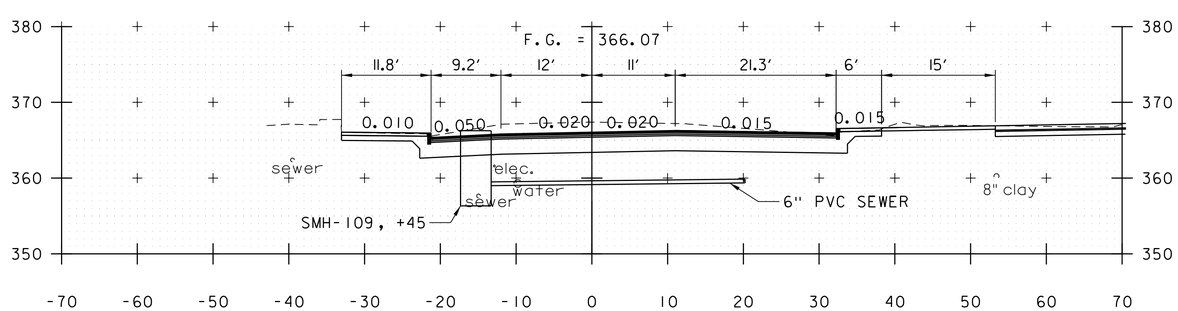

102+25
BEGIN PROJECT
STA. 102+10.00

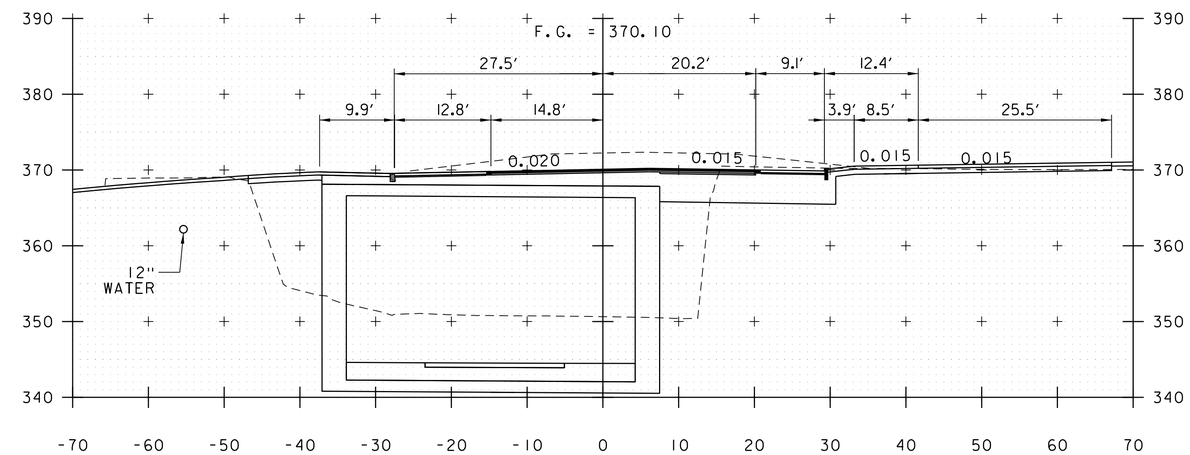

103+25
BEGIN TUNNEL
STA. 103+05.23

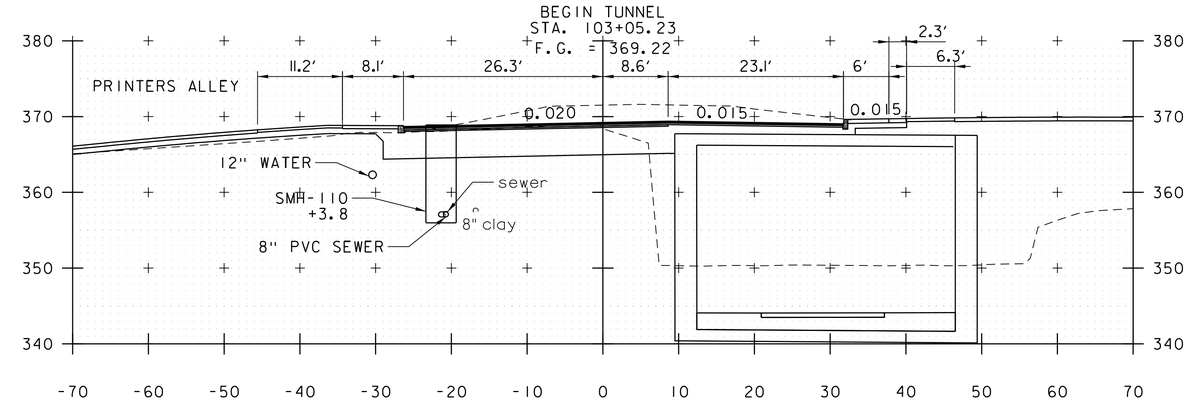

103+00

MAIN ST CROSS SECTIONS

STA. 102+25 - 103+25
SCALE 1" = 10'-0"

PROJECT NAME: MIDDLEBURY	
PROJECT NUMBER: WCRS(23)	
FILE NAME: zl3g542xs.dgn	PLOT DATE: 4/30/2019
PROJECT LEADER: A.P. GUYETTE	DRAWN BY: D.M.PECK
DESIGNED BY: D.M.PECK	CHECKED BY: S.E. BURBANK
MAIN ST CROSS SECTIONS (2 OF 4)	SHEET 238 OF 328

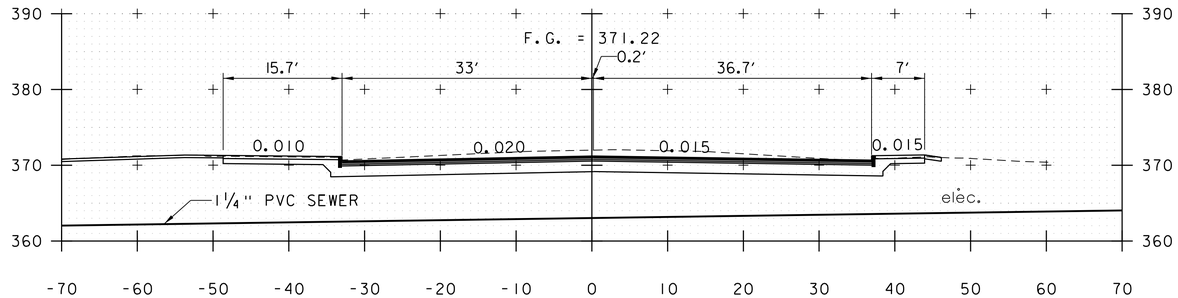

104+00
END PROJECT
STA. 103+85.00

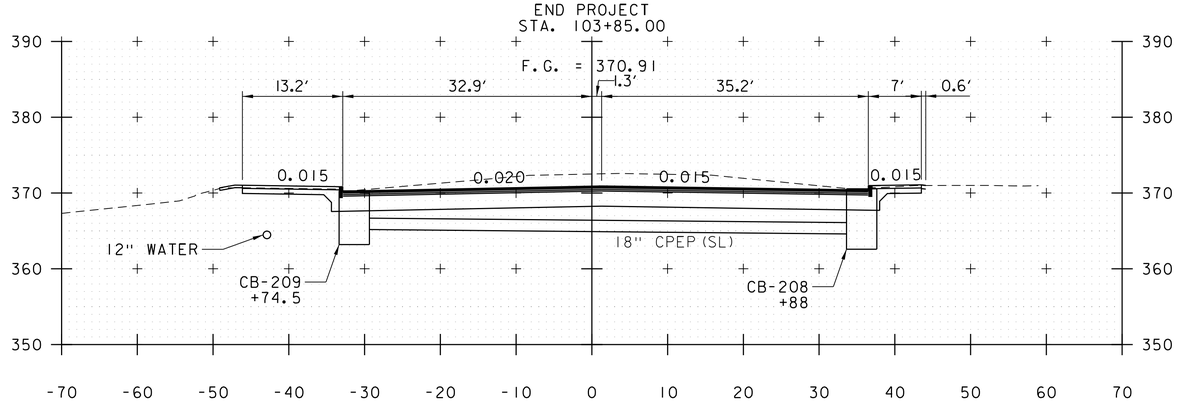

103+75

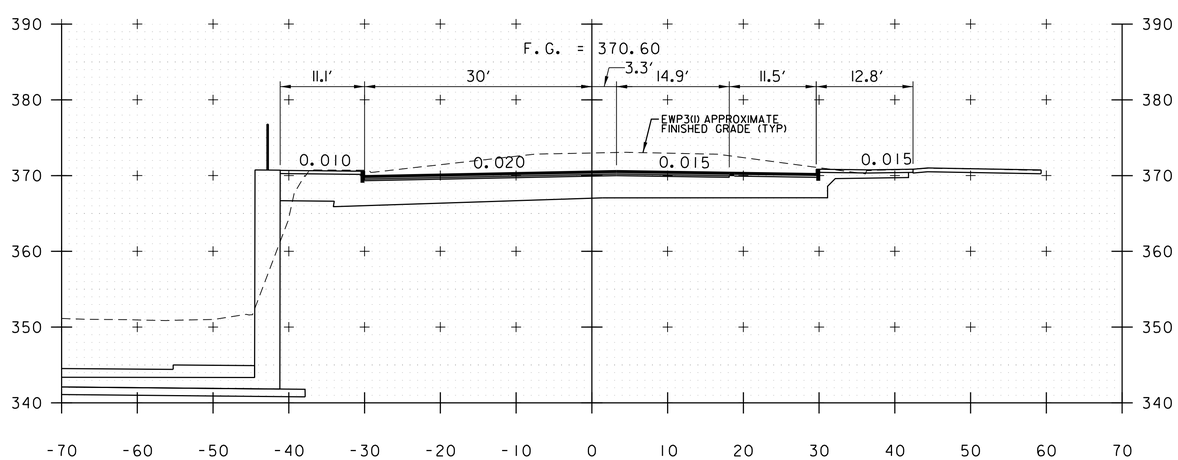

103+50
END TUNNEL
STA. 103+28.93

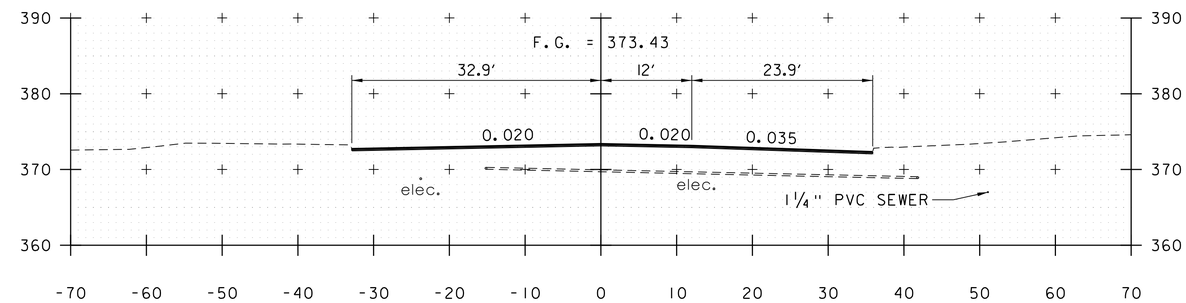

104+75

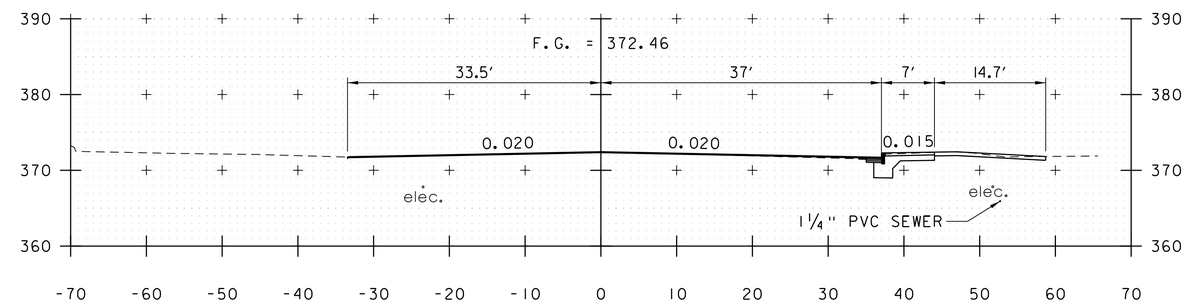

104+50

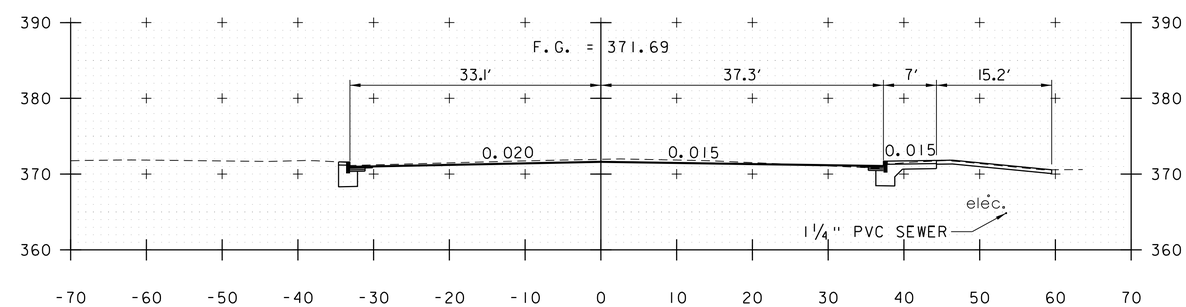

104+25

MAIN ST CROSS SECTIONS

STA. 103+50 - 104+75
SCALE 1" = 10'-0"

PROJECT NAME: MIDDLEBURY	
PROJECT NUMBER: WCRS(23)	
FILE NAME: zl3g542xs.dgn	PLOT DATE: 4/30/2019
PROJECT LEADER: A.P. GUYETTE	DRAWN BY: D.M.PECK
DESIGNED BY: D.M.PECK	CHECKED BY: S.E. BURBANK
MAIN ST CROSS SECTIONS (3 OF 4)	SHEET 239 OF 328

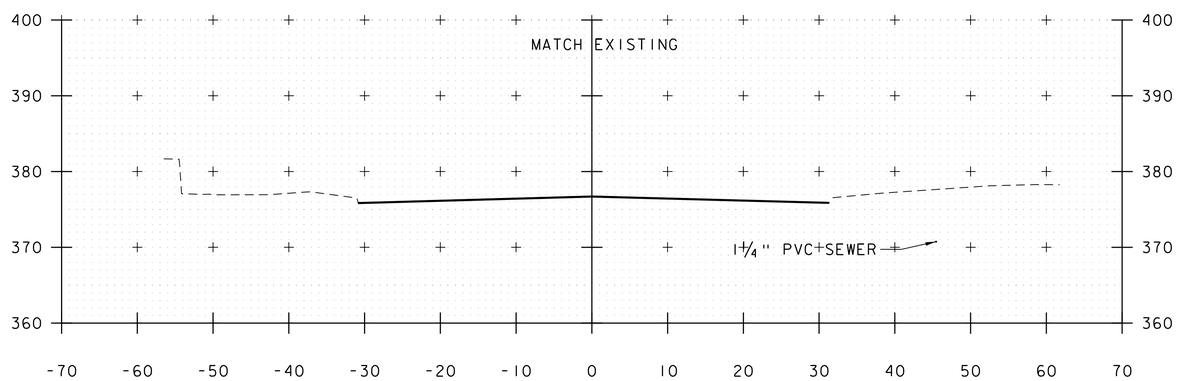

105+25

END APPROACH
STA. 105+25.00

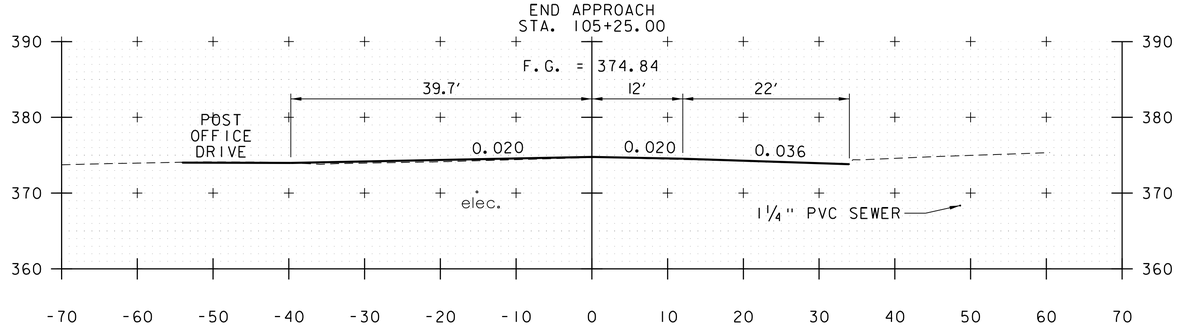

105+00

MAIN ST CROSS SECTIONS

STA. 105+00 - 105+25
SCALE 1" = 10'-0"

PROJECT NAME: MIDDLEBURY	
PROJECT NUMBER: WCRS(23)	
FILE NAME: zl3g542xs.dgn	PLOT DATE: 4/30/2019
PROJECT LEADER: A.P. GUYETTE	DRAWN BY: D.M.PECK
DESIGNED BY: D.M.PECK	CHECKED BY: S.E. BURBANK
MAIN ST CROSS SECTIONS (4 OF 4)	SHEET 240 OF 328

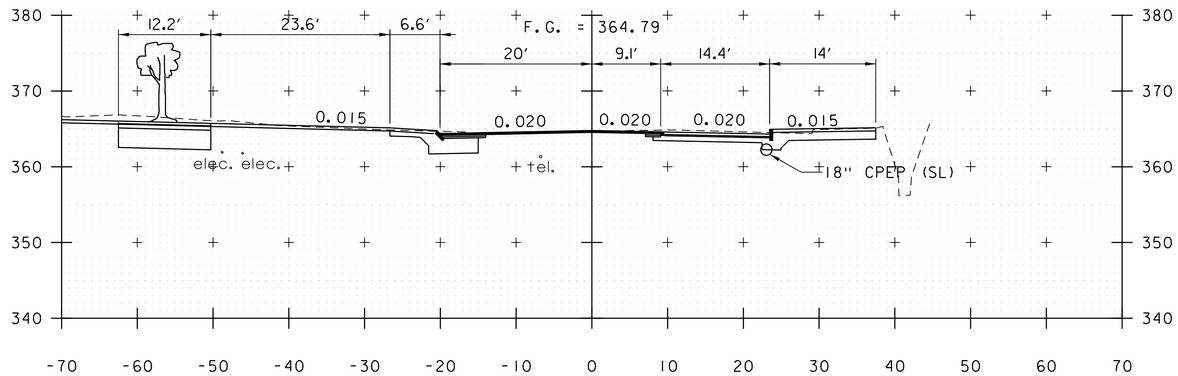

200+50

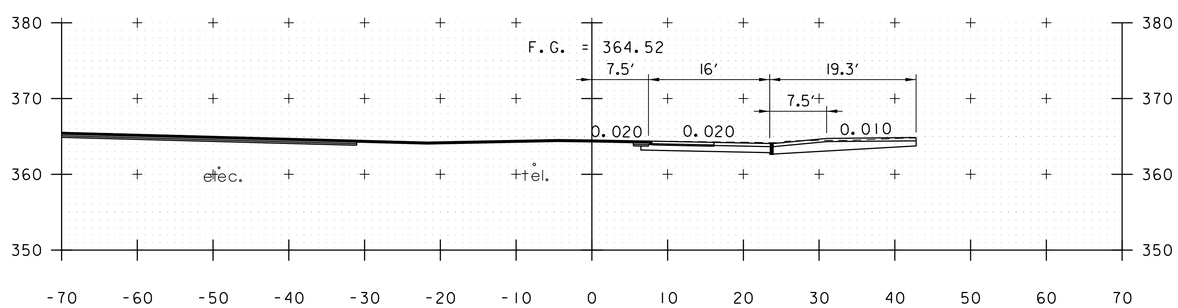

200+25
BEGIN APPROACH
STA. 200+25.00

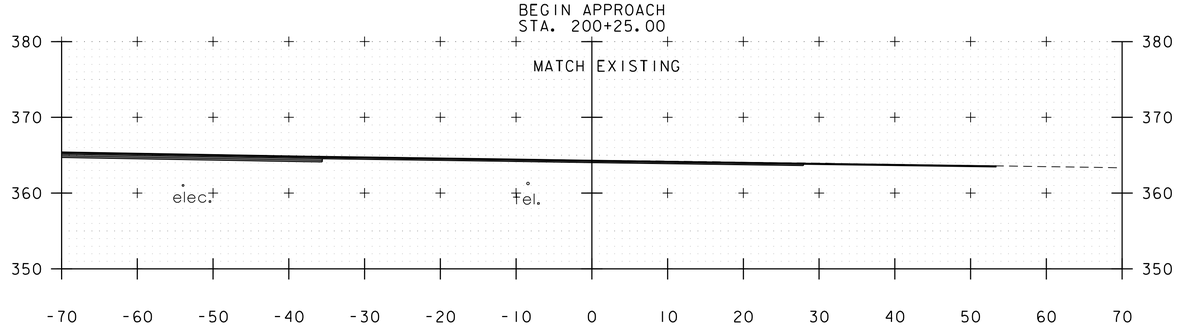

200+00

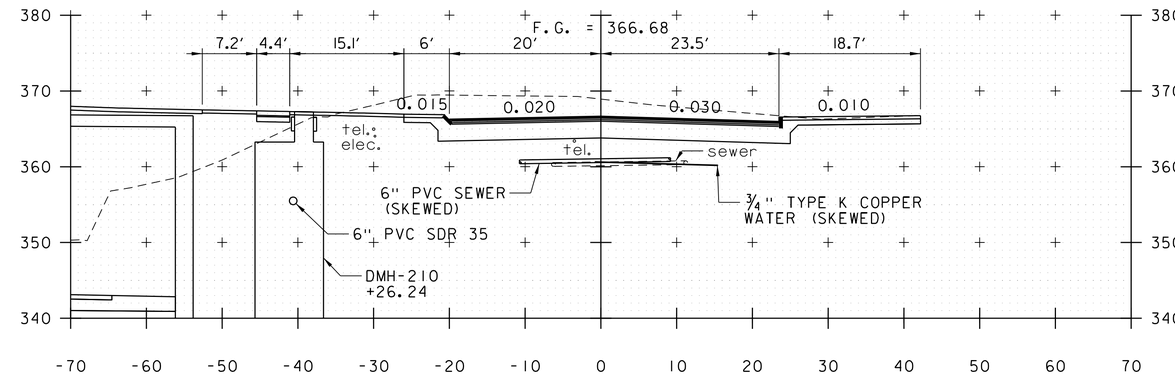

201+25
BEGIN PROJECT
STA. 201+15.00

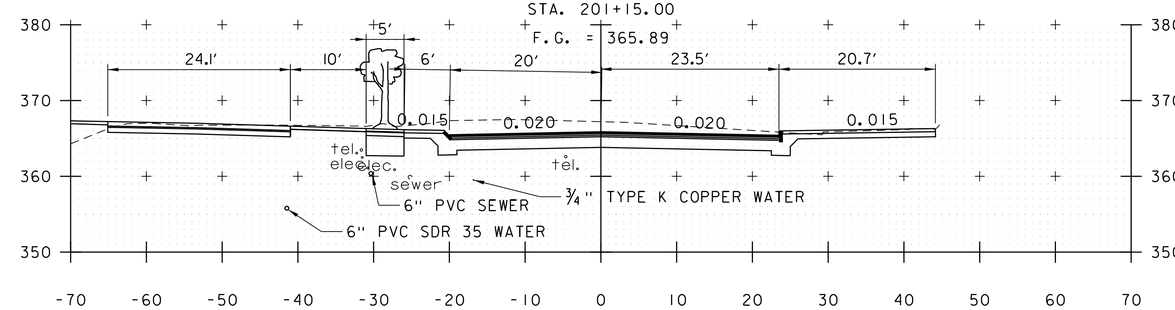

201+00

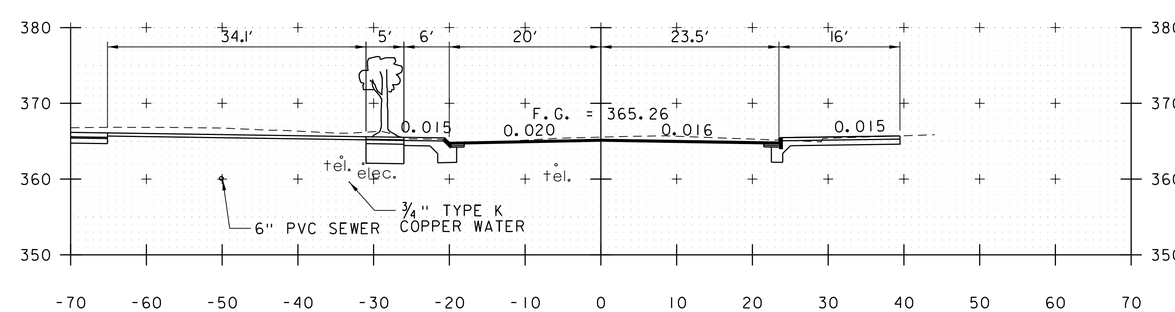

200+75

MERCHANTS ROW CROSS SECTIONS

STA. 200+00 - 201+25
SCALE 1" = 10'-0"

vhb

PROJECT NAME: MIDDLEBURY	
PROJECT NUMBER: WCRS(23)	
FILE NAME: zl3g542xs.dgn	PLOT DATE: 4/30/2019
PROJECT LEADER: A.P. GUYETTE	DRAWN BY: D.M.PECK
DESIGNED BY: D.M. PECK	CHECKED BY: S.E. BURBANK
MERCHANTS ROW CROSS SECTIONS (1 OF 4)	SHEET 241 OF 328

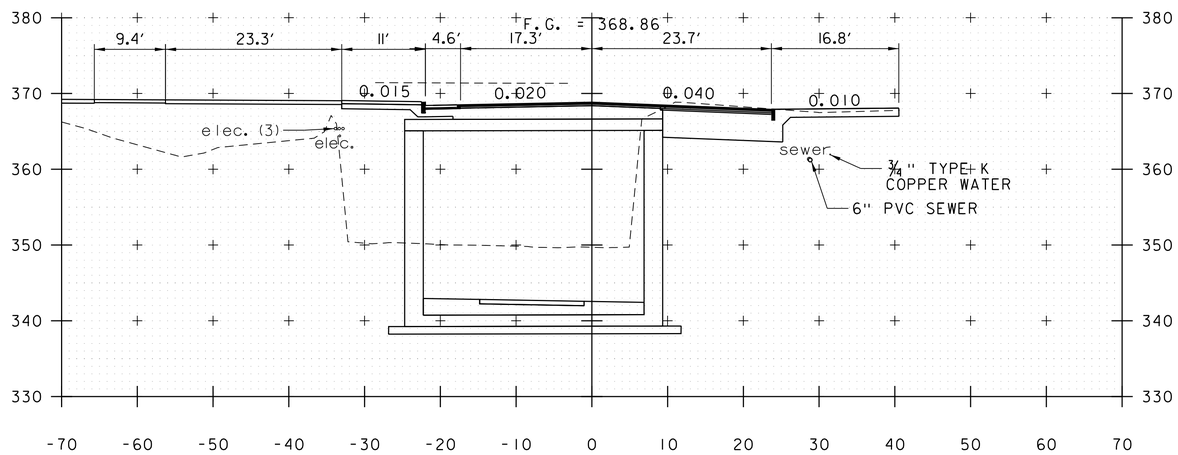

201+75
BEGIN TUNNEL
STA. 201+67.82

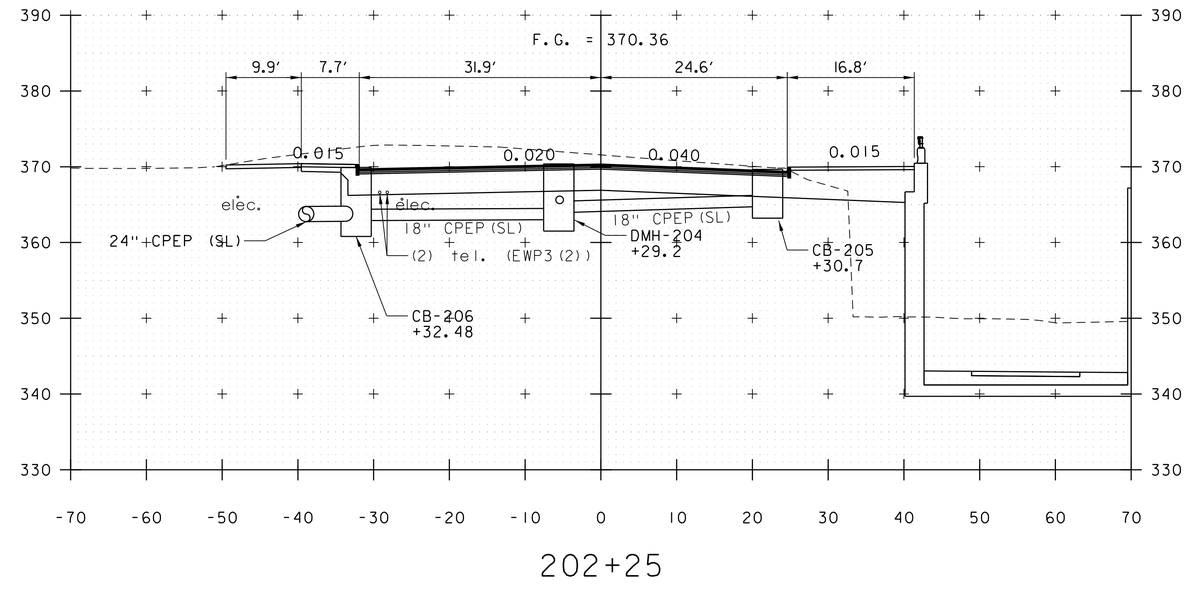

202+25

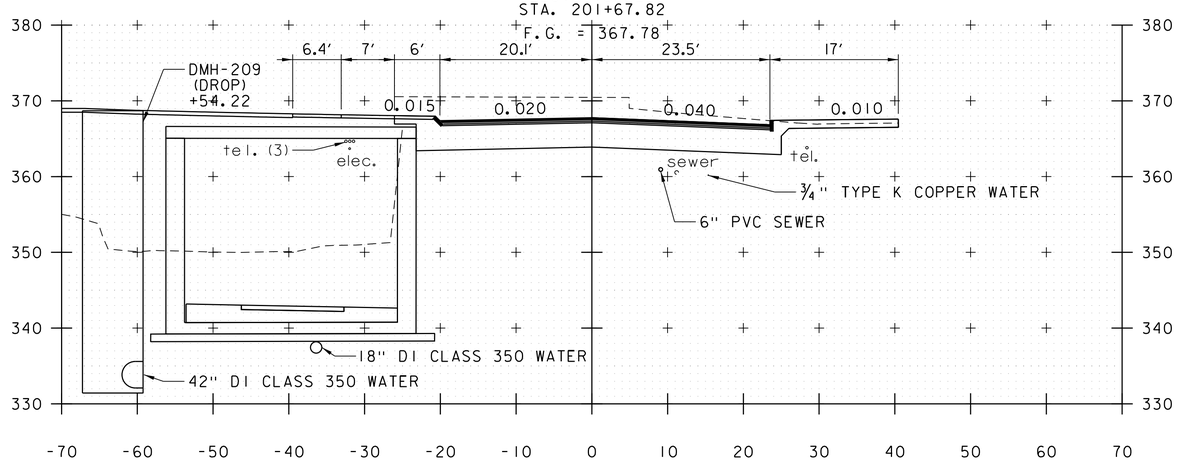

201+50

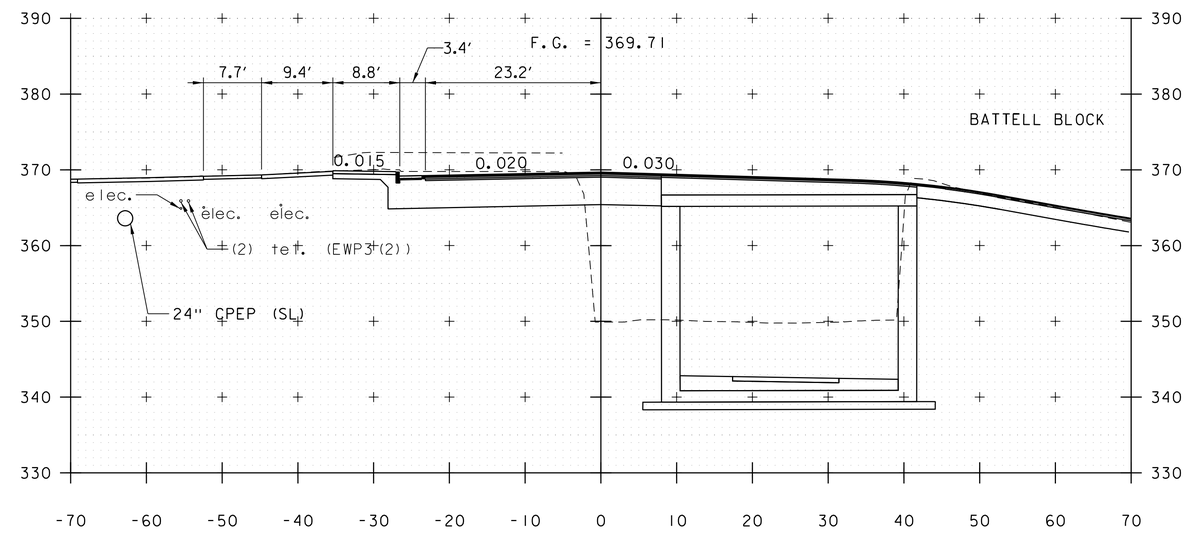

202+00
END TUNNEL
STA. 201+93.99

MERCHANTS ROW CROSS SECTIONS

STA. 201+50 - 202+25
SCALE 1" = 10'-0"

PROJECT NAME: MIDDLEBURY	
PROJECT NUMBER: WCRS(23)	
FILE NAME: zl3g542xs.dgn	PLOT DATE: 4/30/2019
PROJECT LEADER: A.P. GUYETTE	DRAWN BY: D.M.PECK
DESIGNED BY: D.M.PECK	CHECKED BY: S.E. BURBANK
MERCHANTS ROW CROSS SECTIONS (2 OF 4)	SHEET 242 OF 328

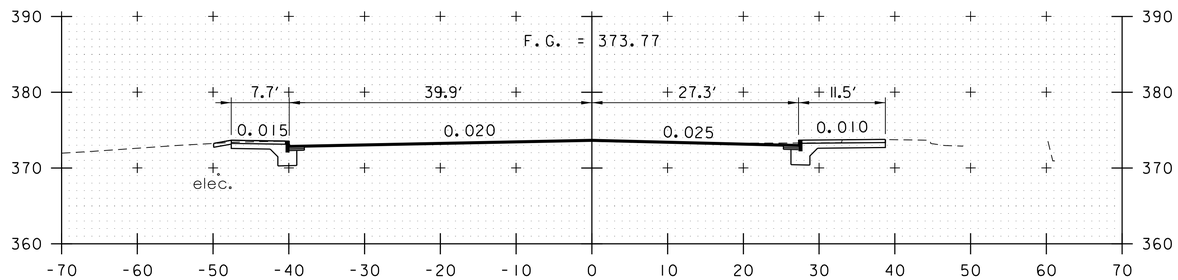

203+00

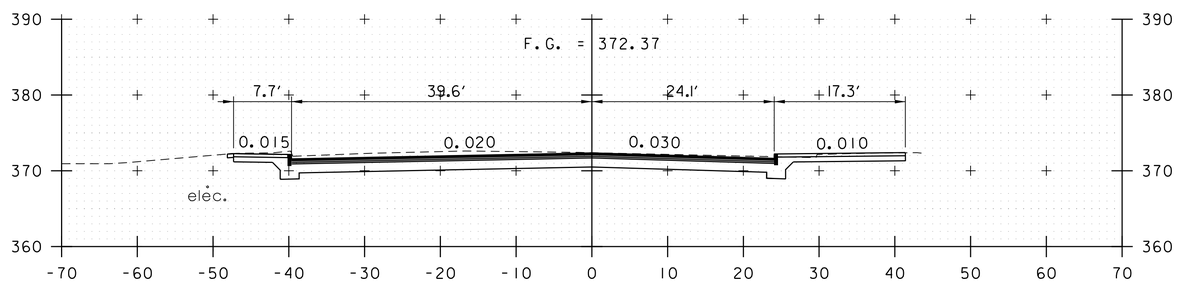

202+75
END PROJECT
STA. 202+55.00

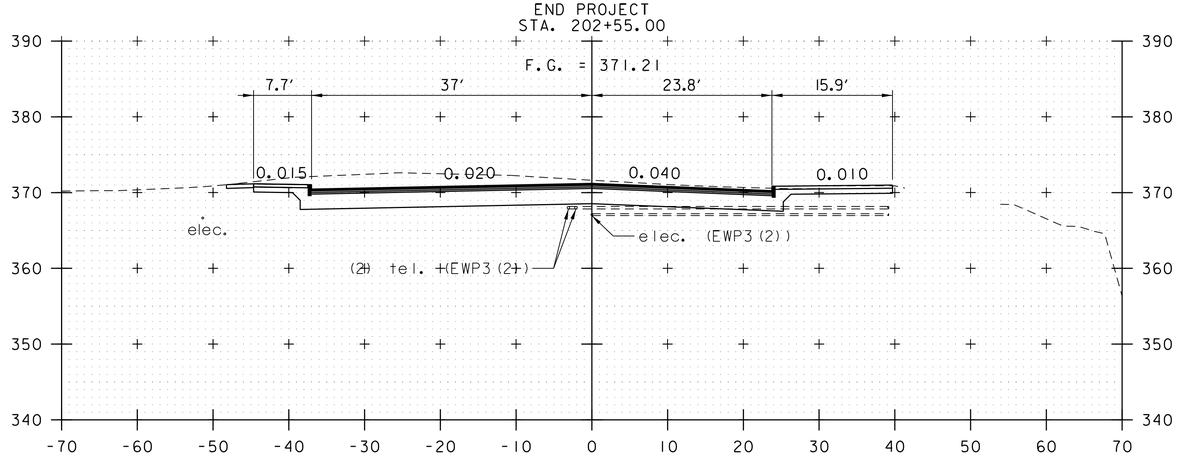

202+50

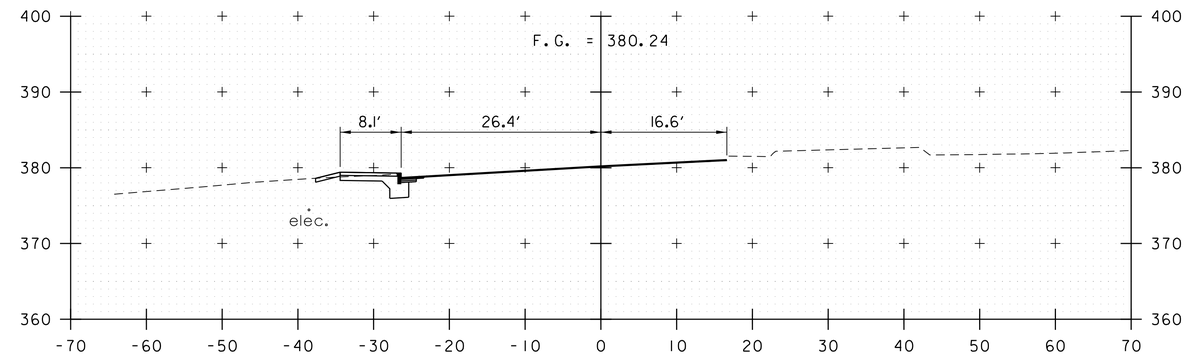

203+75

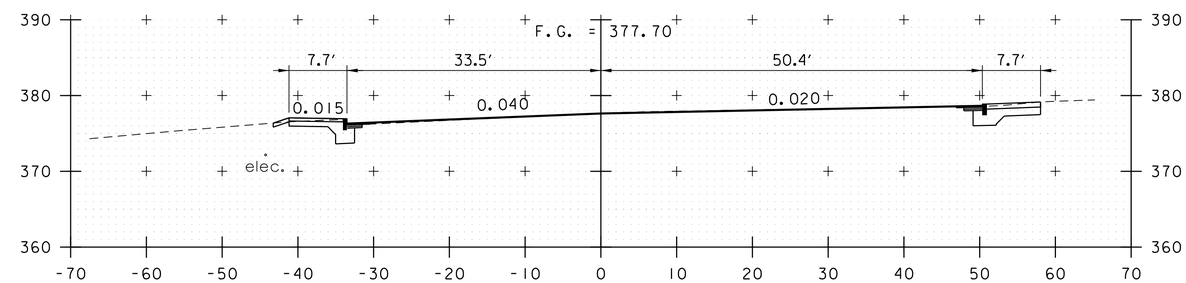

203+50

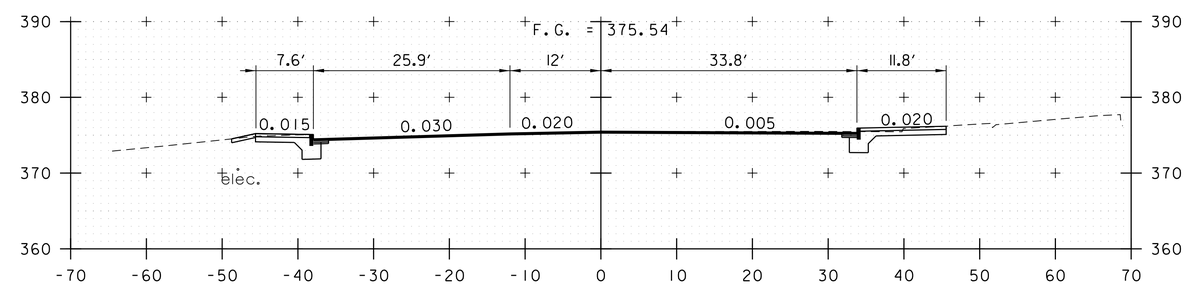

203+25

MERCHANTS ROW CROSS SECTIONS

STA. 202+50 - 203+75
SCALE 1" = 10'-0"

PROJECT NAME: MIDDLEBURY	
PROJECT NUMBER: WCRS(23)	
FILE NAME: zl3g542xs.dgn	PLOT DATE: 4/30/2019
PROJECT LEADER: A.P. GUYETTE	DRAWN BY: D.M.PECK
DESIGNED BY: D.M.PECK	CHECKED BY: S.E. BURBANK
MERCHANTS ROW CROSS SECTIONS (3 OF 4)	SHEET 243 OF 328

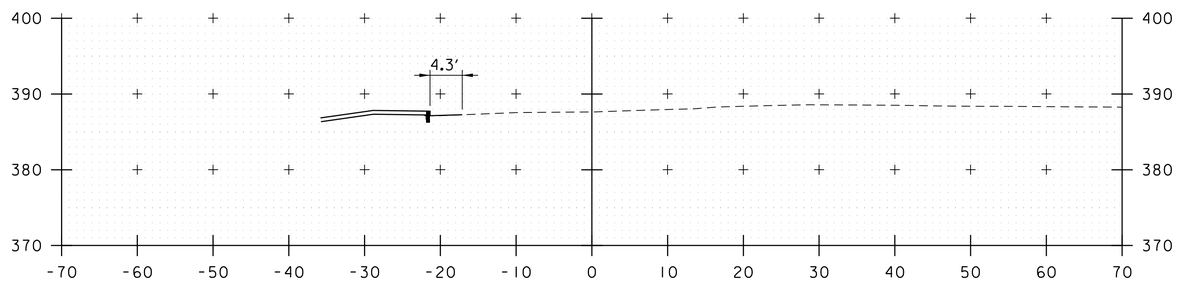

204+50

END APPROACH
STA. 204+39.00

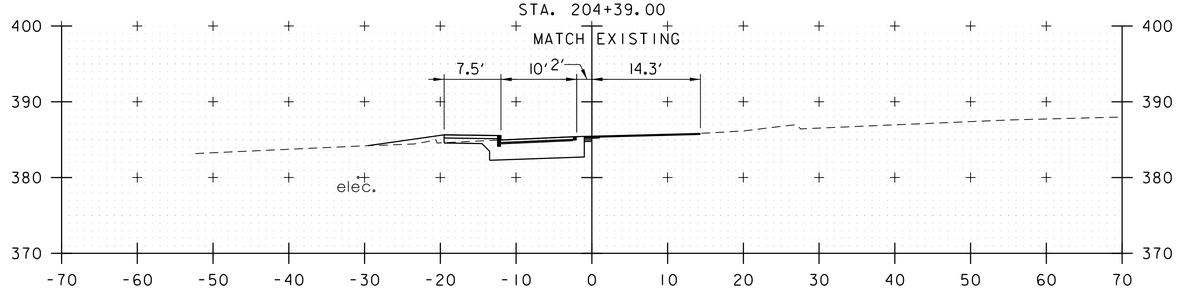

204+25

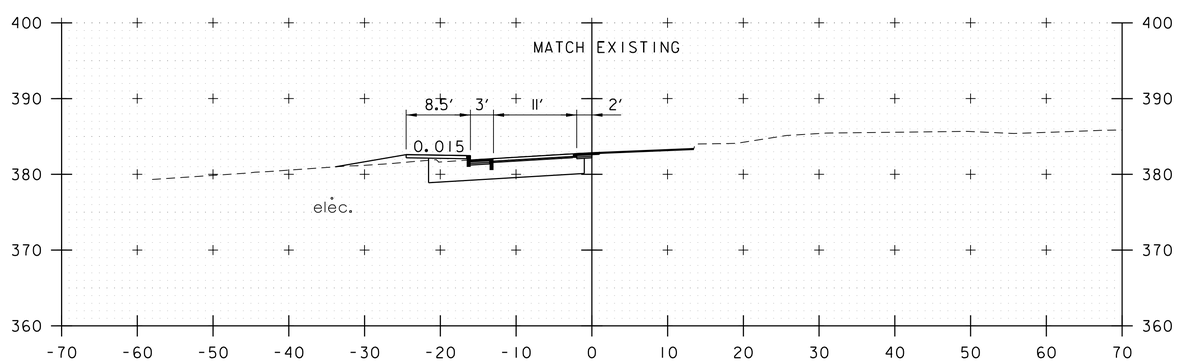

204+00

MERCHANTS ROW CROSS SECTIONS

STA. 204+00 - 204+50
SCALE 1" = 10'-0"

PROJECT NAME: MIDDLEBURY	
PROJECT NUMBER: WCRS(23)	
FILE NAME: zl3g542xs.dgn	PLOT DATE: 4/30/2019
PROJECT LEADER: A.P. GUYETTE	DRAWN BY: D.M.PECK
DESIGNED BY: D.M.PECK	CHECKED BY: S.E. BURBANK
MERCHANTS ROW CROSS SECTIONS (4 OF 4)	SHEET 244 OF 328

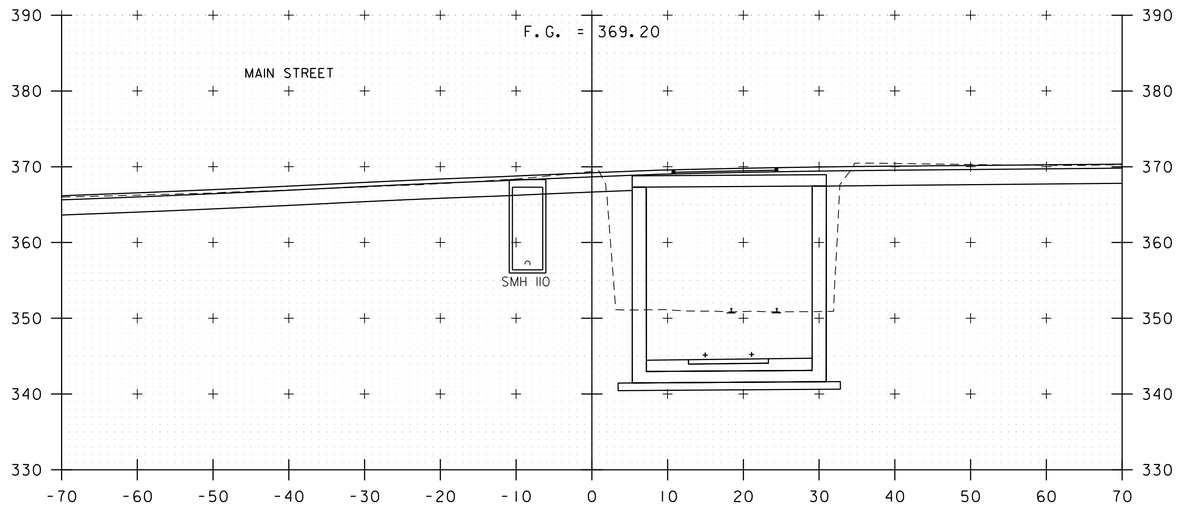

20+20

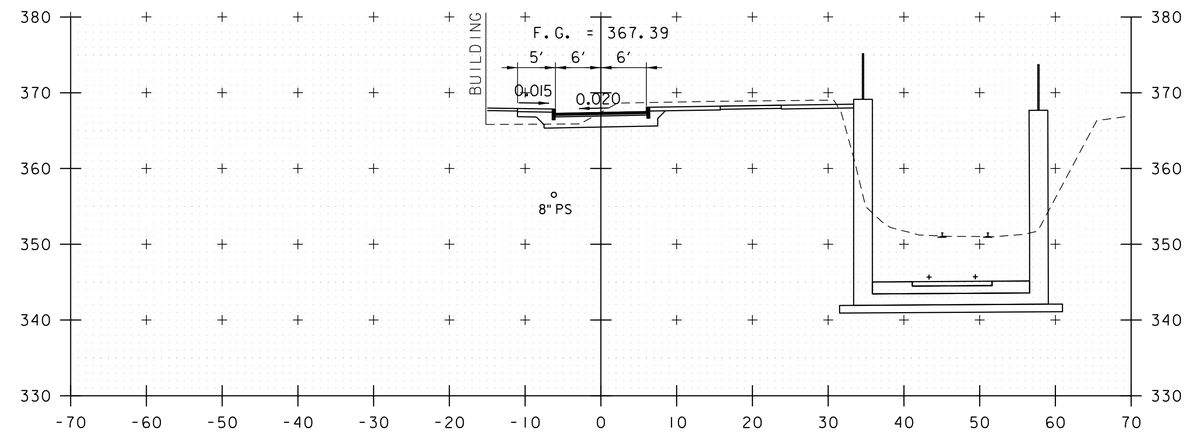

20+60

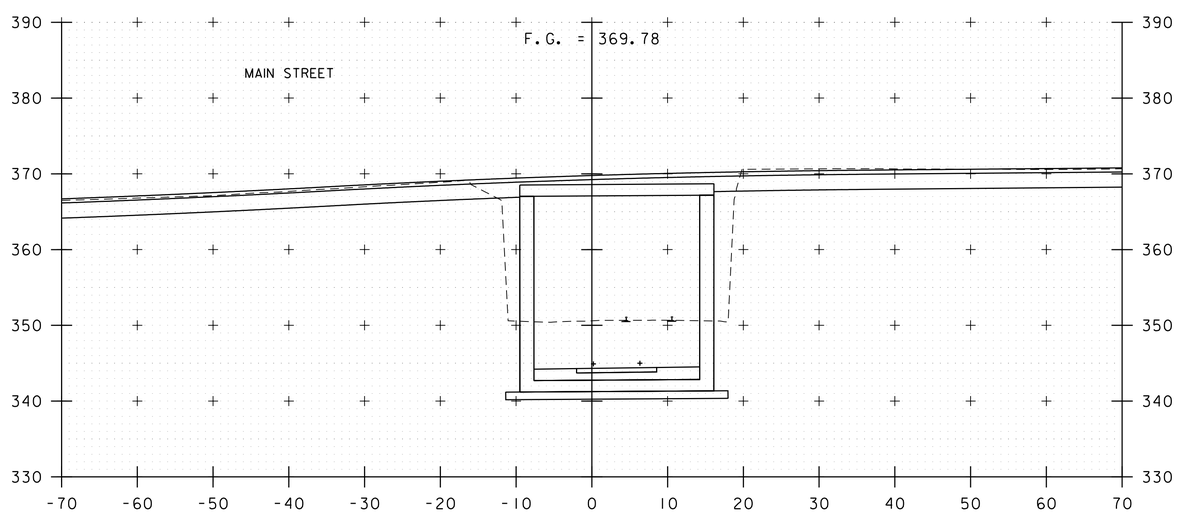

20+00

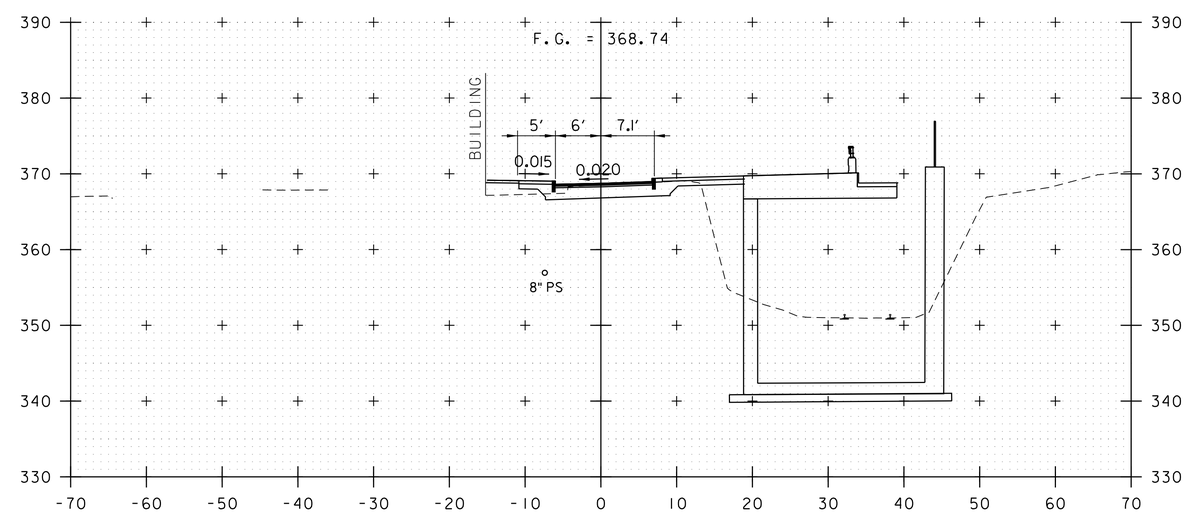

20+40

PRINTER'S ALLEY CROSS SECTIONS

STA. 20+00 - 20+60
SCALE 1" = 10'-0"

PROJECT NAME: MIDDLEBURY	
PROJECT NUMBER: WCRS(23)	
FILE NAME: zl3g542xs.dgn	PLOT DATE: 4/30/2019
PROJECT LEADER: A.P. GUYETTE	DRAWN BY: D.M.PECK
DESIGNED BY: D.M.PECK	CHECKED BY: S.E. BURBANK
PRINTER'S ALLEY CROSS SECTIONS (1 OF 3)	SHEET 245 OF 328

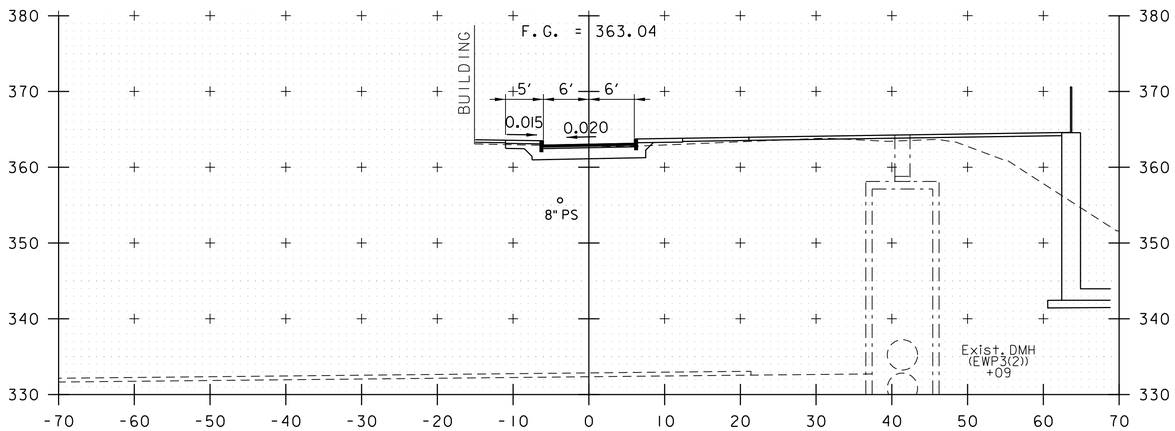

21+00

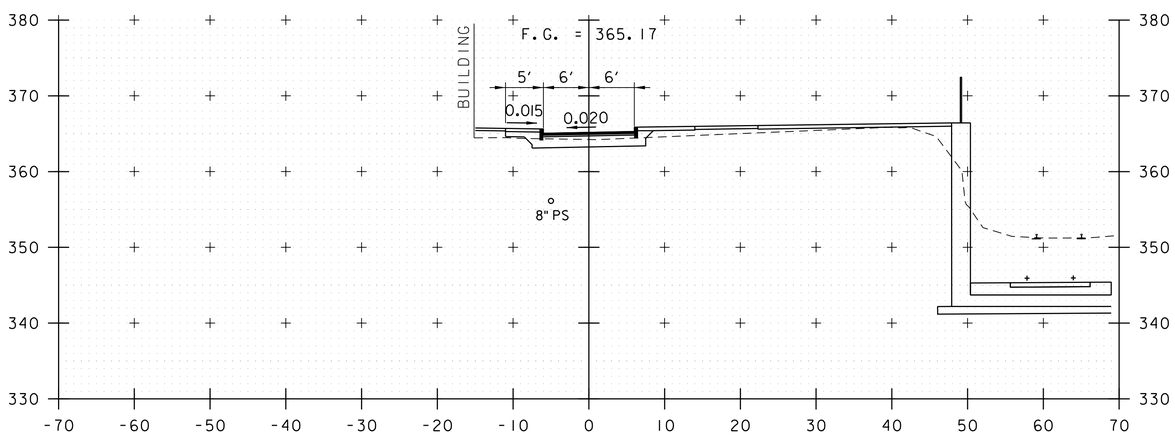

20+80

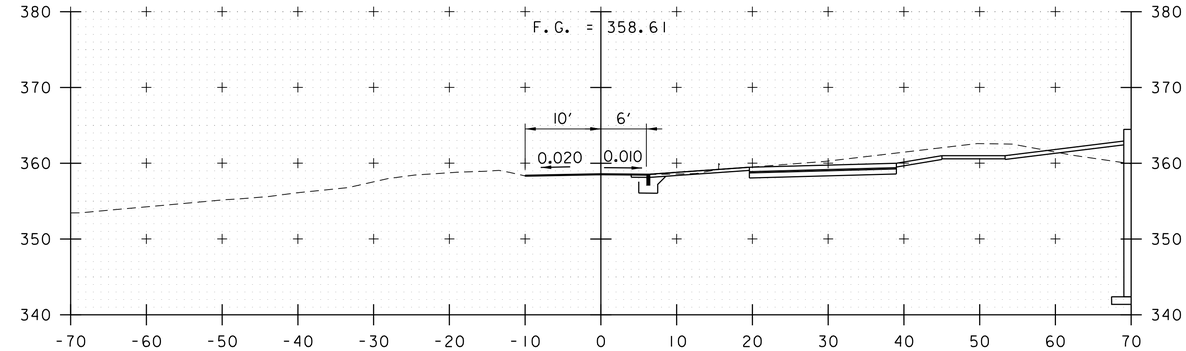

21+60

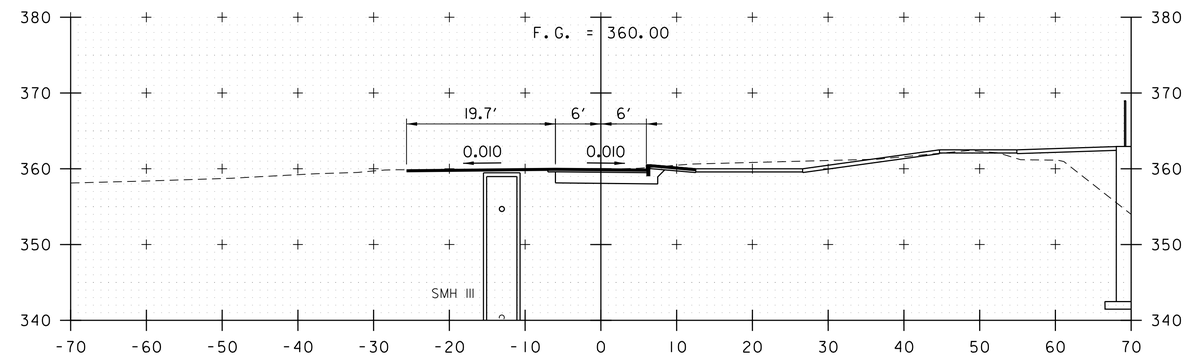

21+40

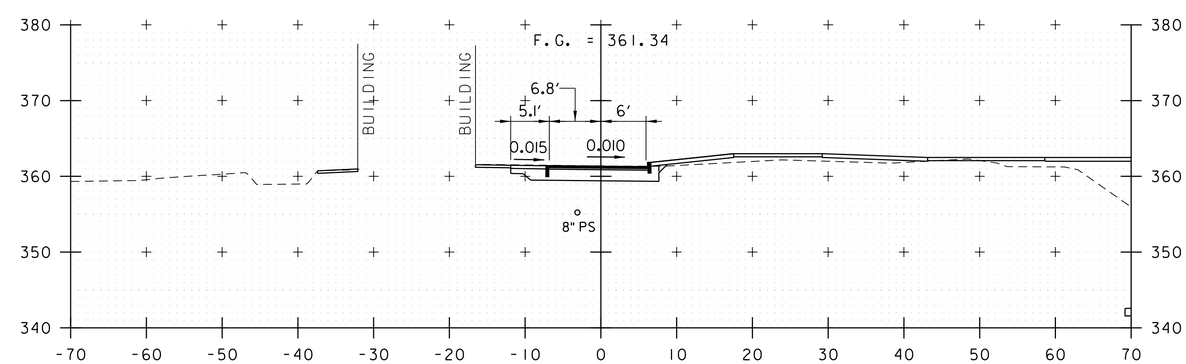

21+20

PRINTER'S ALLEY CROSS SECTIONS

STA. 20+80 - 21+60
SCALE 1" = 10'-0"

PROJECT NAME: MIDDLEBURY	
PROJECT NUMBER: WCRS(23)	
FILE NAME: zl3g542xs.dgn	PLOT DATE: 4/30/2019
PROJECT LEADER: A.P. GUYETTE	DRAWN BY: D.M.PECK
DESIGNED BY: D.M. PECK	CHECKED BY: S.E. BURBANK
PRINTER'S ALLEY CROSS SECTIONS (2 OF 3)	SHEET 246 OF 328

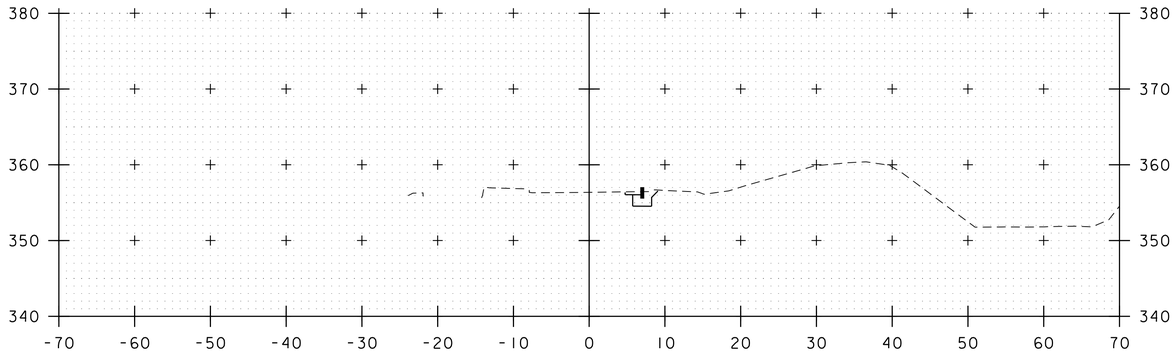

22+00

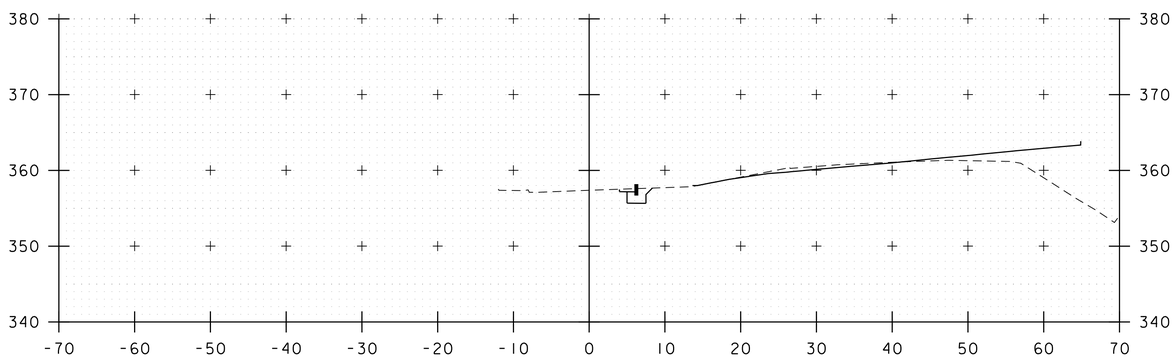

21+80

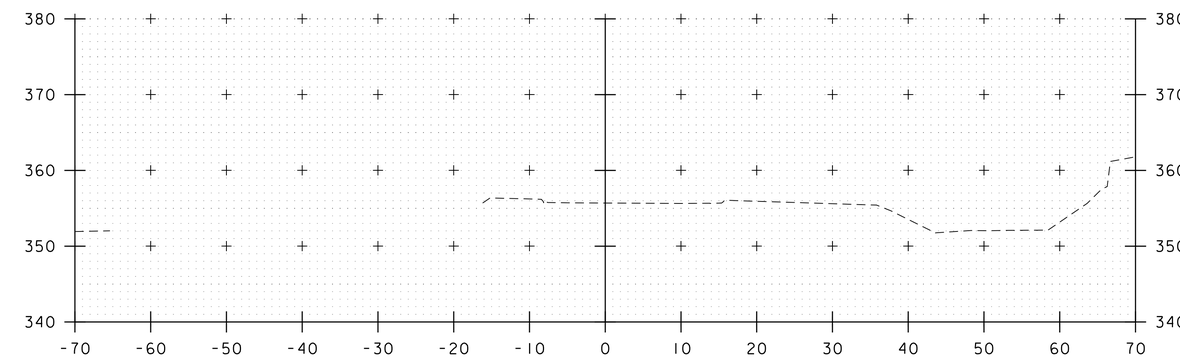

22+25

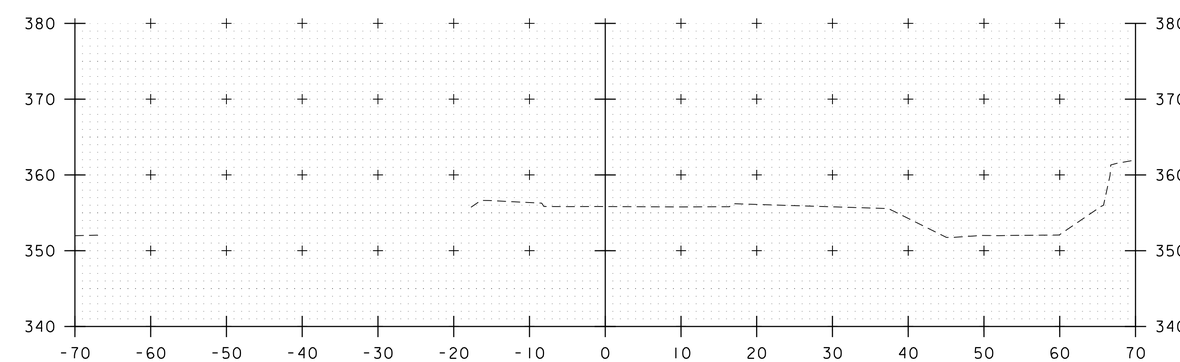

22+20

PRINTER'S ALLEY CROSS SECTIONS

STA. 21+80 - 22+25
SCALE 1" = 10'-0"

PROJECT NAME: MIDDLEBURY	
PROJECT NUMBER: WCRS(23)	
FILE NAME: zl3g542xs.dgn	PLOT DATE: 4/30/2019
PROJECT LEADER: A.P. GUYETTE	DRAWN BY: D.M.PECK
DESIGNED BY: D.M. PECK	CHECKED BY: S.E. BURBANK
PRINTER'S ALLEY CROSS SECTIONS (3 OF 3)	SHEET 247 OF 328

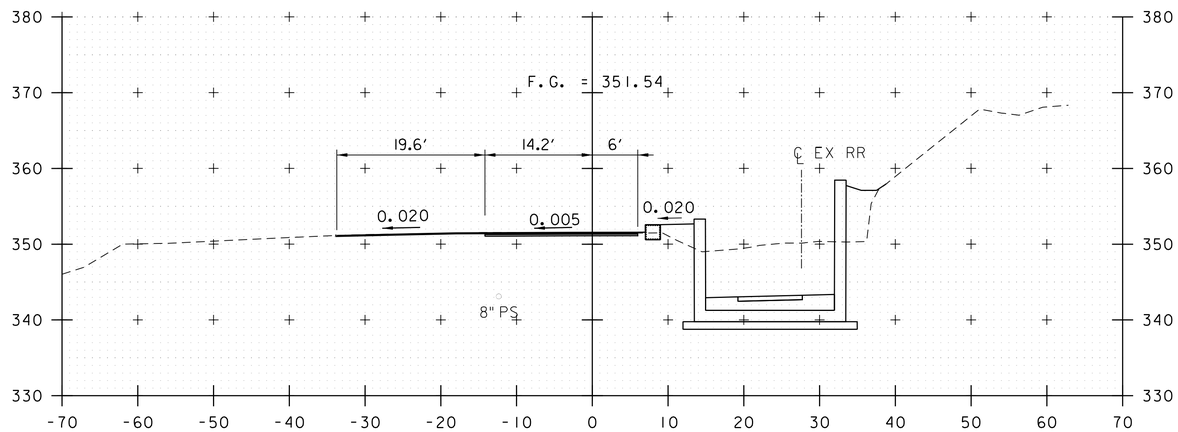

500+25

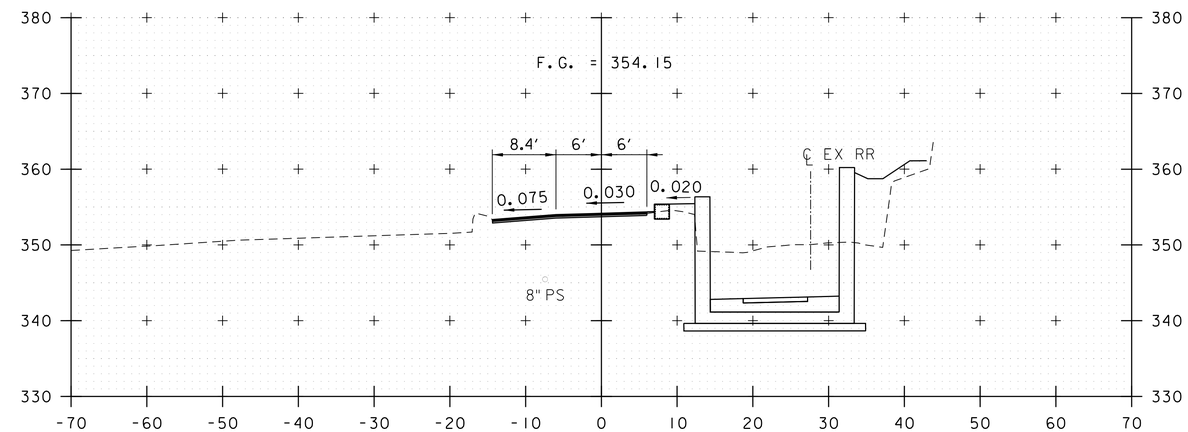

500+75

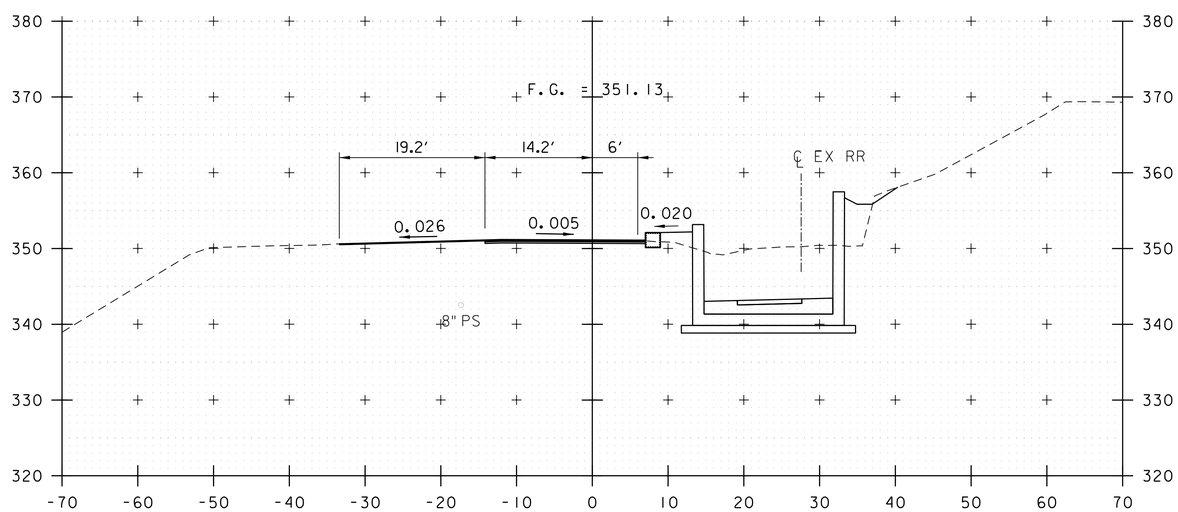

500+00

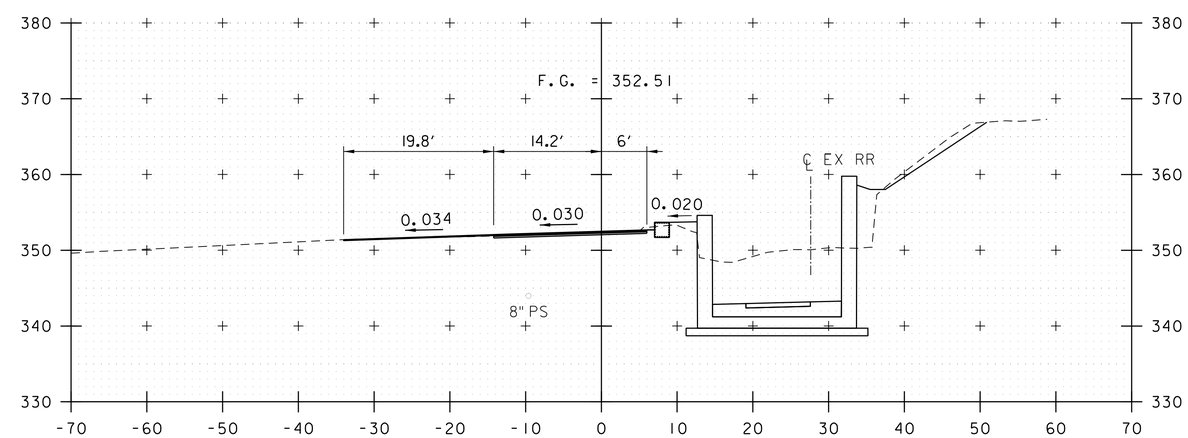

500+50

BATTELL BLOCK ACCESS CROSS SECTIONS

STA. 500+00 - 500+75
SCALE 1" = 10'-0"

PROJECT NAME: MIDDLEBURY	
PROJECT NUMBER: WCRS(23)	
FILE NAME: zl3g542xs.dgn	PLOT DATE: 5/1/2019
PROJECT LEADER: A.P. GUYETTE	DRAWN BY: D.M.PECK
DESIGNED BY: D.M.PECK	CHECKED BY: S.E. BURBANK
BATTELL BLOCK CROSS SECTIONS (1 OF 3)	SHEET 248 OF 328

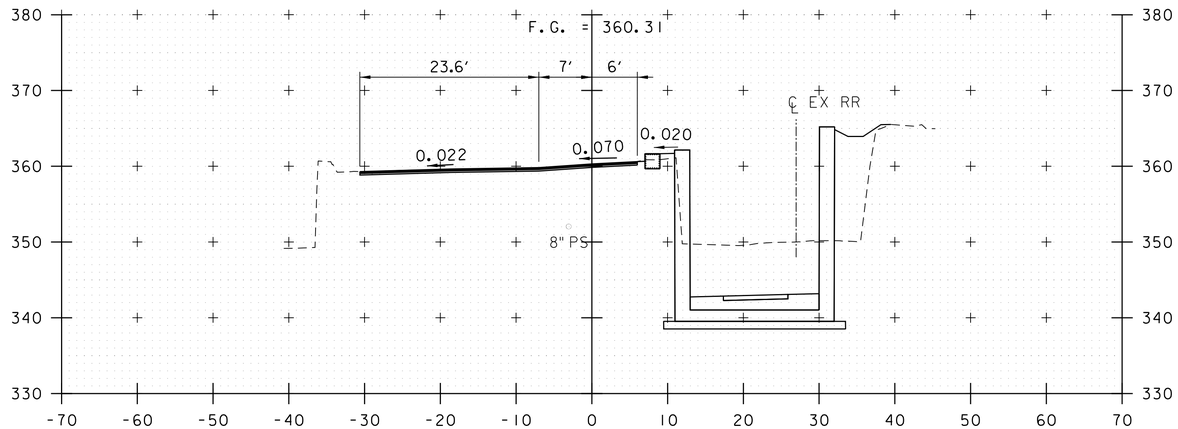

501+25

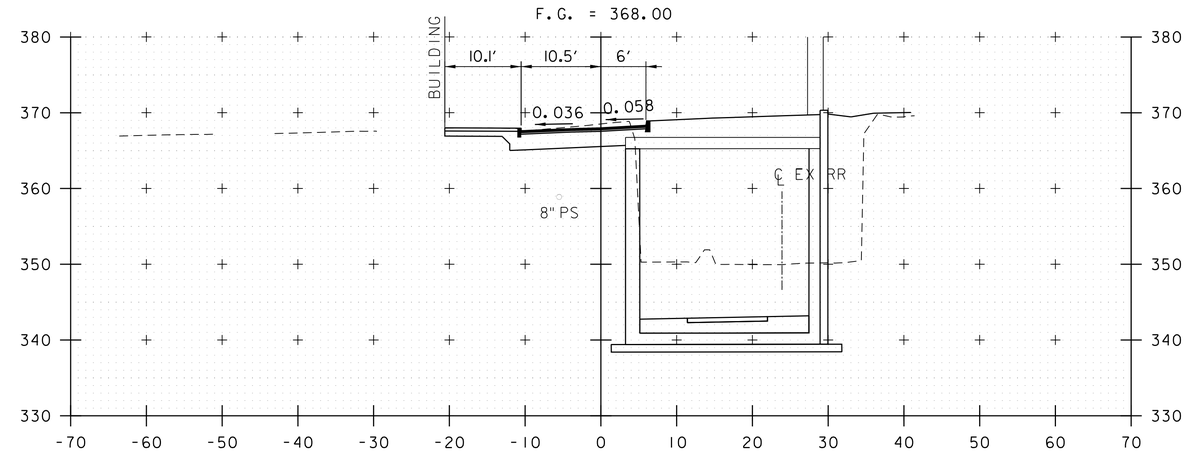

501+75

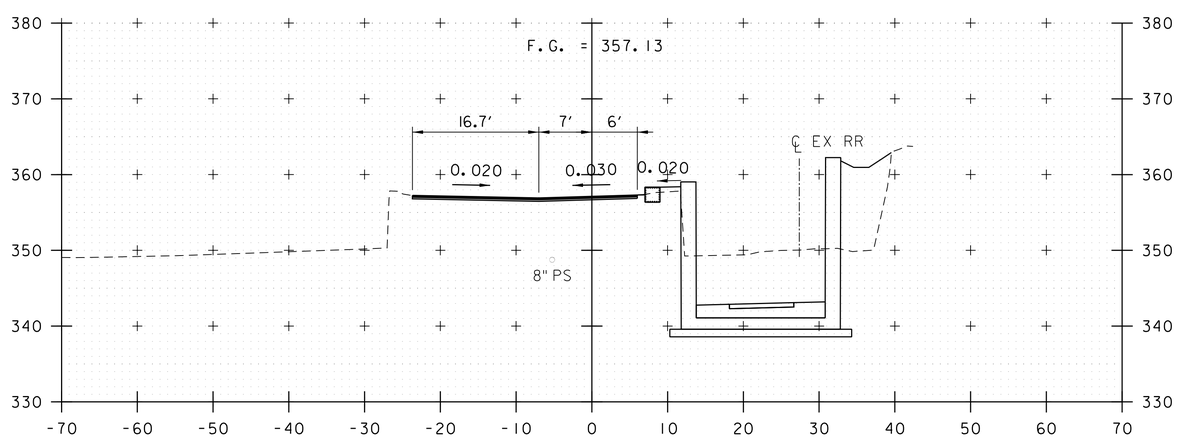

501+00

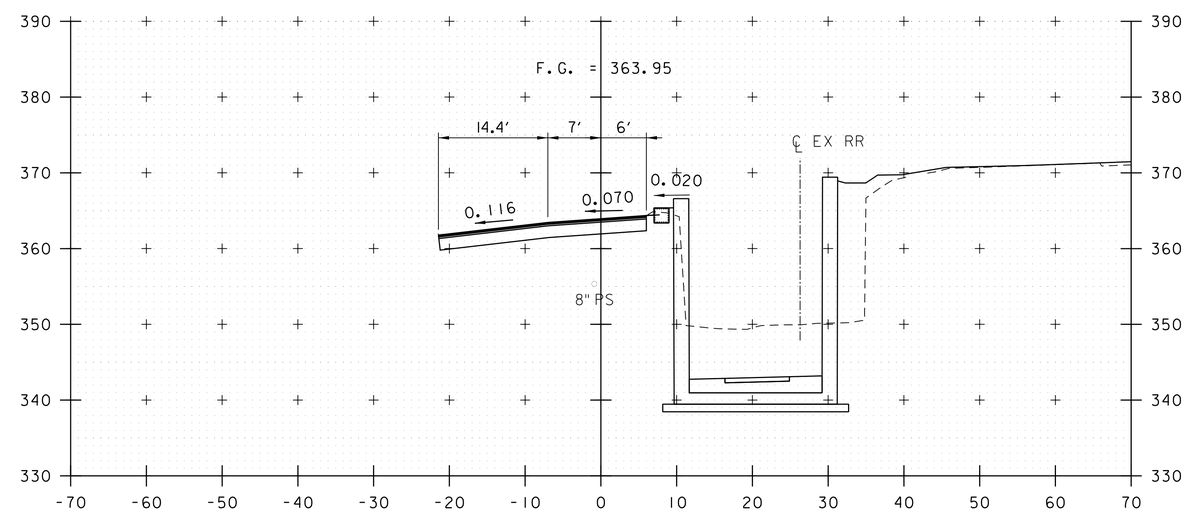

501+50

BATTELL BLOCK ACCESS CROSS SECTIONS

STA. 501+00 - 501+75
SCALE 1" = 10'-0"

PROJECT NAME: MIDDLEBURY	
PROJECT NUMBER: WCRS(23)	
FILE NAME: zl3g542xs.dgn	PLOT DATE: 5/1/2019
PROJECT LEADER: A.P. GUYETTE	DRAWN BY: D.M.PECK
DESIGNED BY: D.M.PECK	CHECKED BY: S.E. BURBANK
BATTELL BLOCK CROSS SECTIONS (2 OF 3)	SHEET 249 OF 328

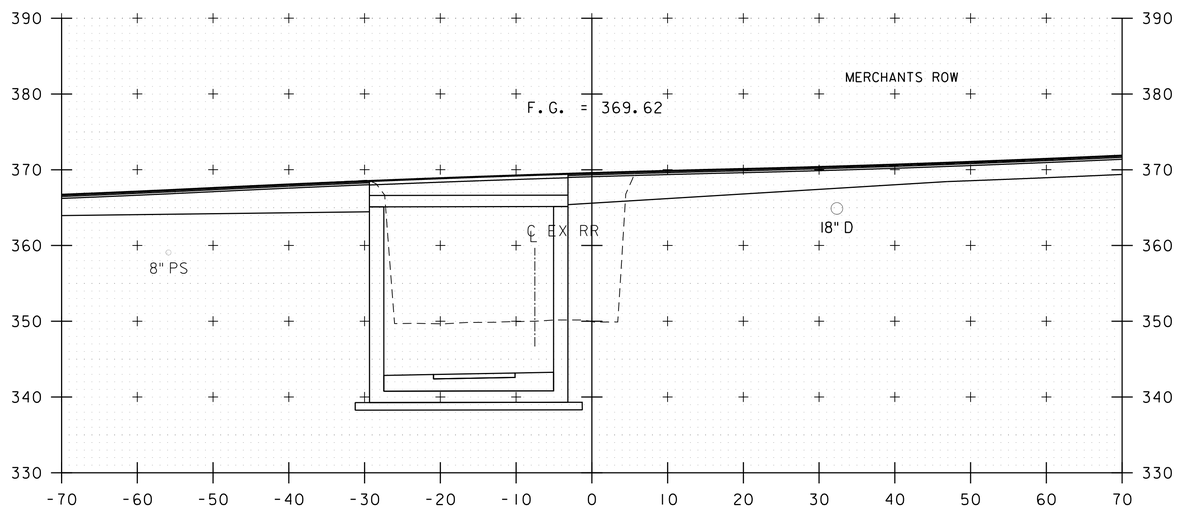

502+17

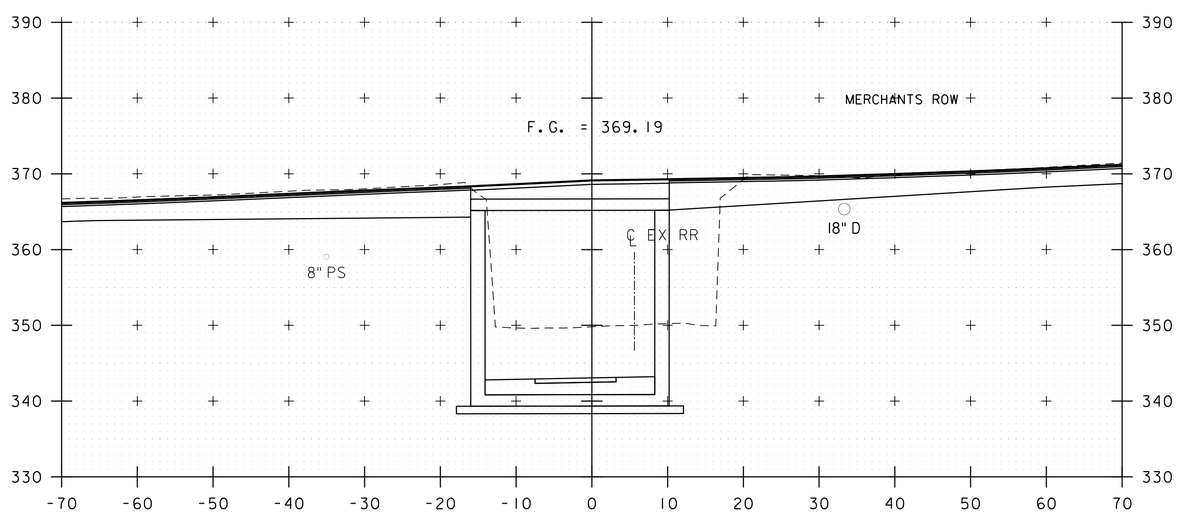

502+00

BATTELL BLOCK ACCESS CROSS SECTIONS

STA. 502+00 - 502+17
SCALE 1" = 10'-0"

PROJECT NAME: MIDDLEBURY	
PROJECT NUMBER: WCRS(23)	
FILE NAME: zl3g542xs.dgn	PLOT DATE: 5/1/2019
PROJECT LEADER: A.P. GUYETTE	DRAWN BY: D.M.PECK
DESIGNED BY: D.M.PECK	CHECKED BY: S.E. BURBANK
BATTELL BLOCK CROSS SECTIONS (3 OF 3)	SHEET 250 OF 328