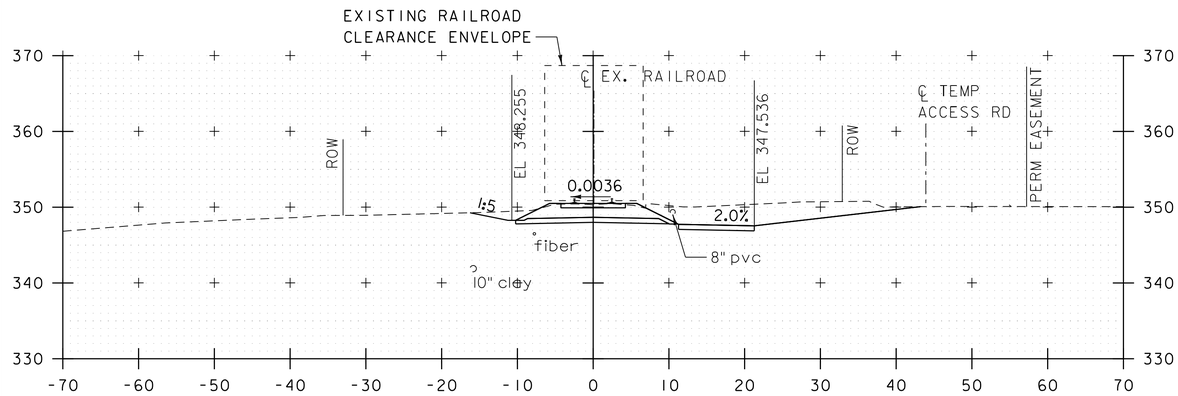

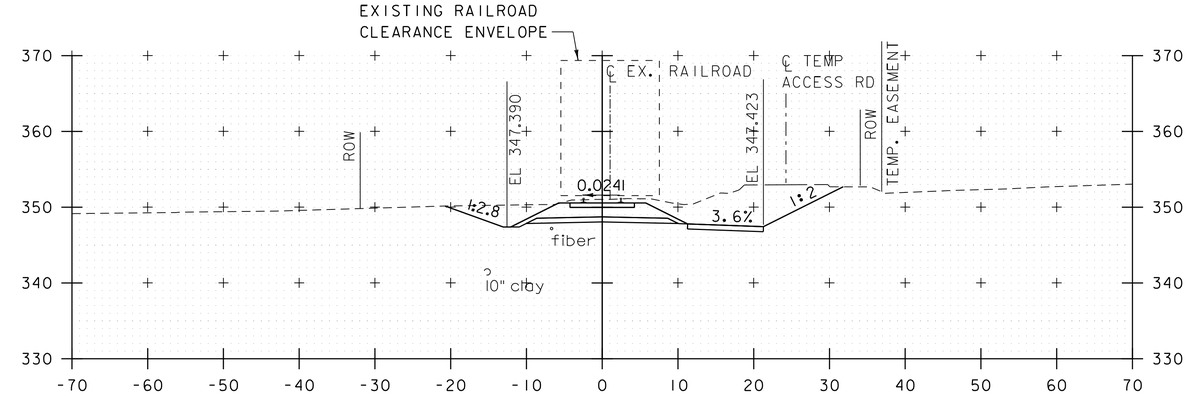

11+00

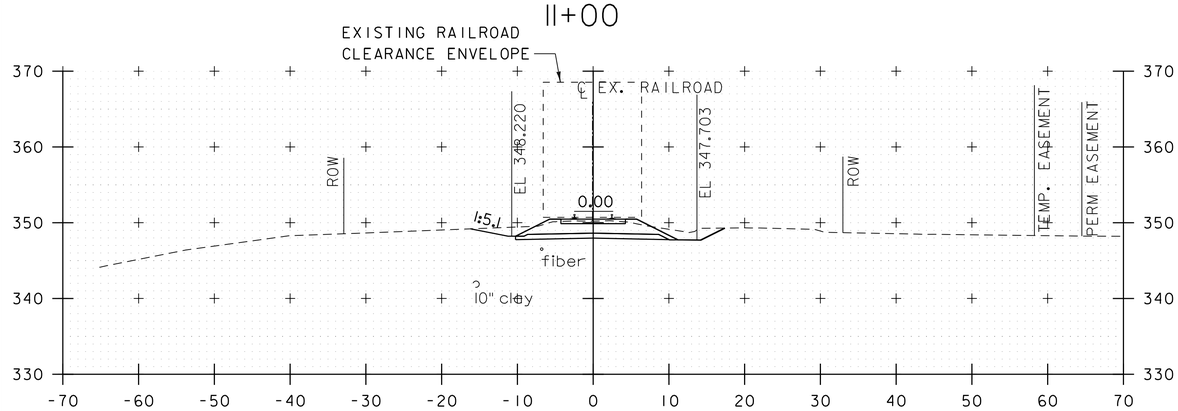

12+50

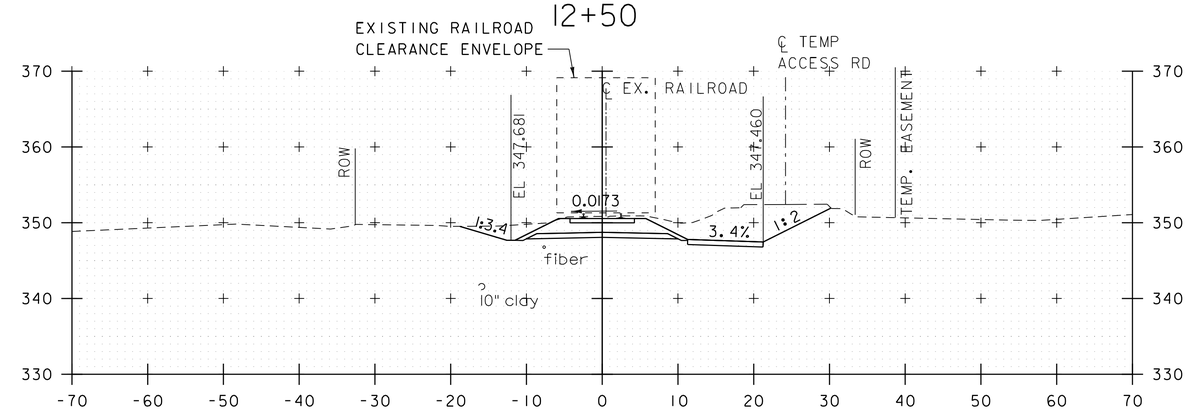

10+50

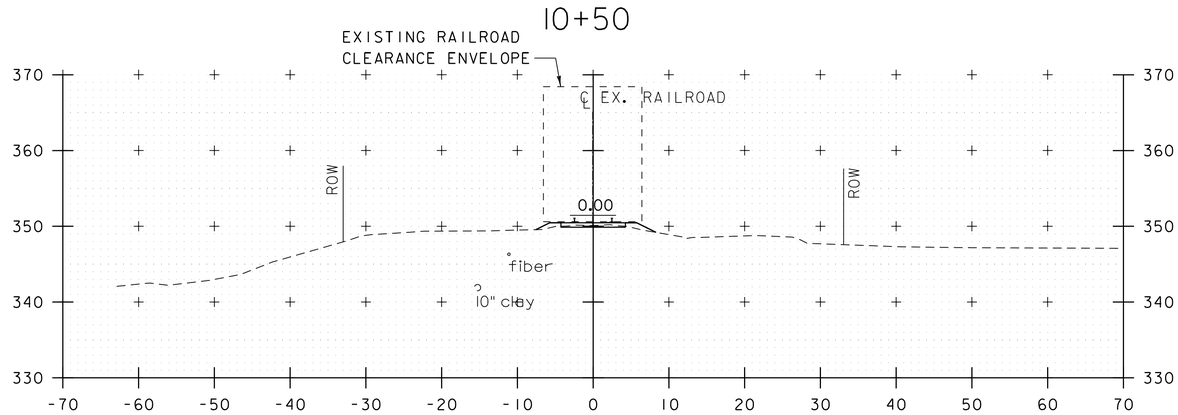

12+00

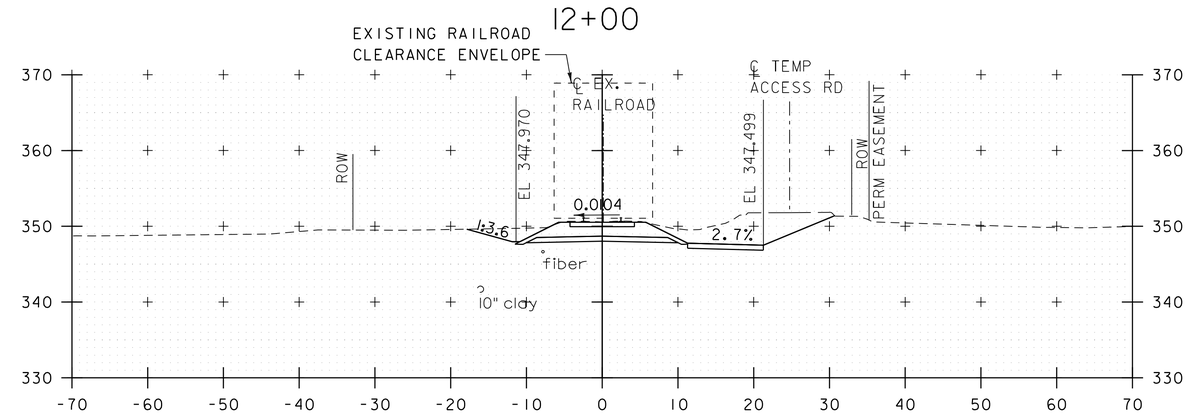

10+25

11+50

RAILROAD CROSS SECTIONS

STA. 10+25 - 12+50
SCALE 1" = 10'-0"

PROJECT NAME: MIDDLEBURY	
PROJECT NUMBER: WCRS(23)	
FILE NAME: zl3g542xs_rail.dgn	PLOT DATE: 4/30/2019
PROJECT LEADER: A.P. GUYETTE	DRAWN BY: D.M. PECK
DESIGNED BY: M.F. SUFFEL	CHECKED BY: M.F. SUFFEL
RAILROAD CROSS SECTIONS (1 OF 16)	SHEET 251 OF 328

vhb

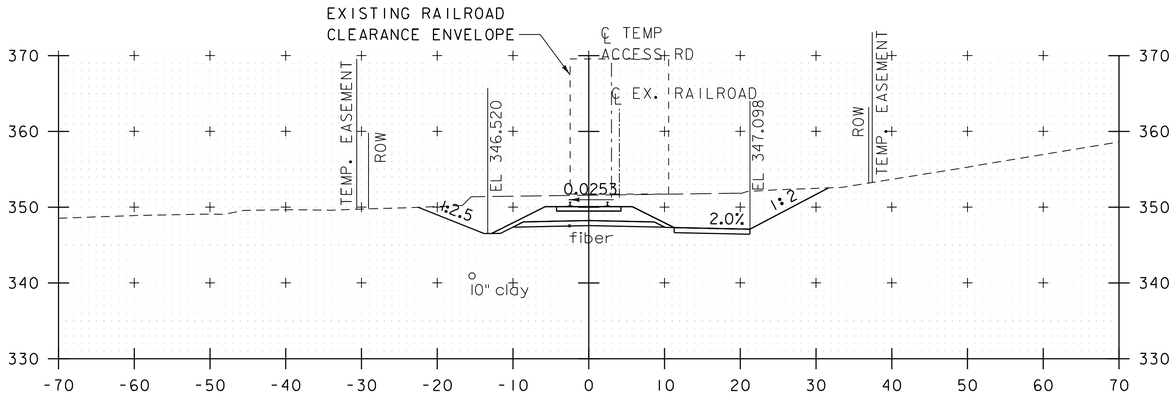

14+00

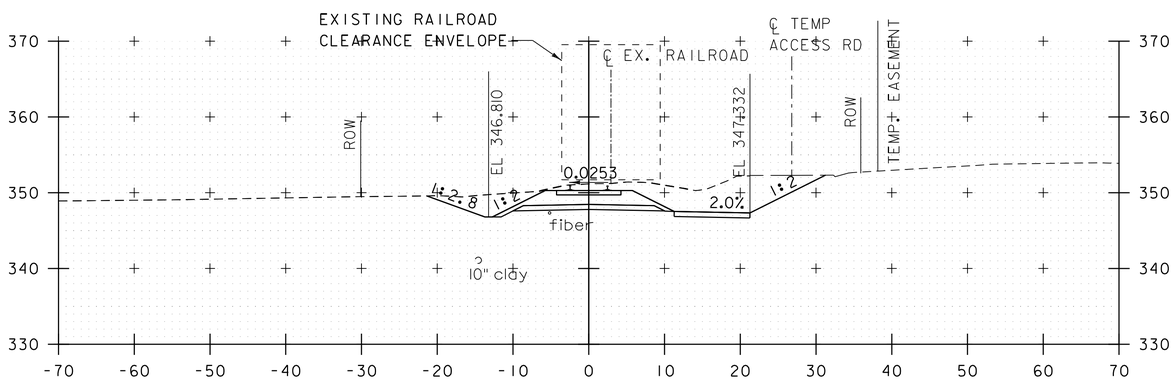

13+50

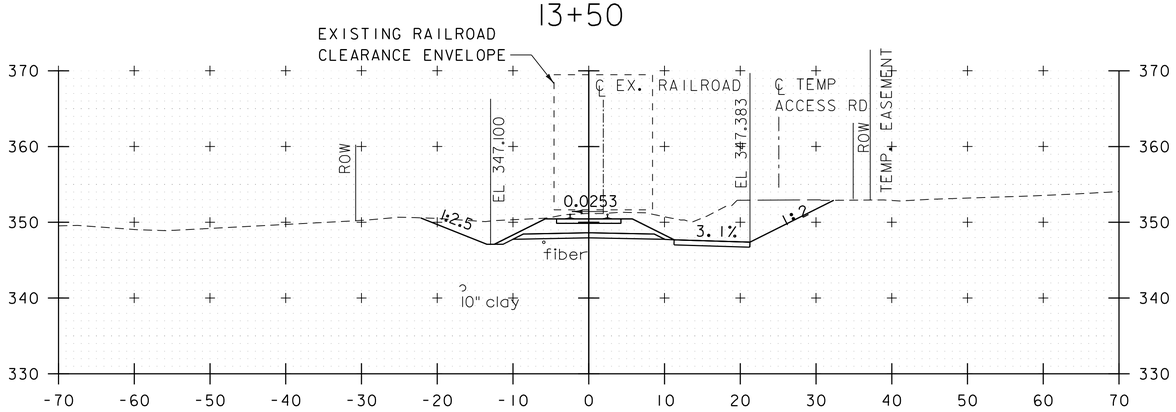

13+00

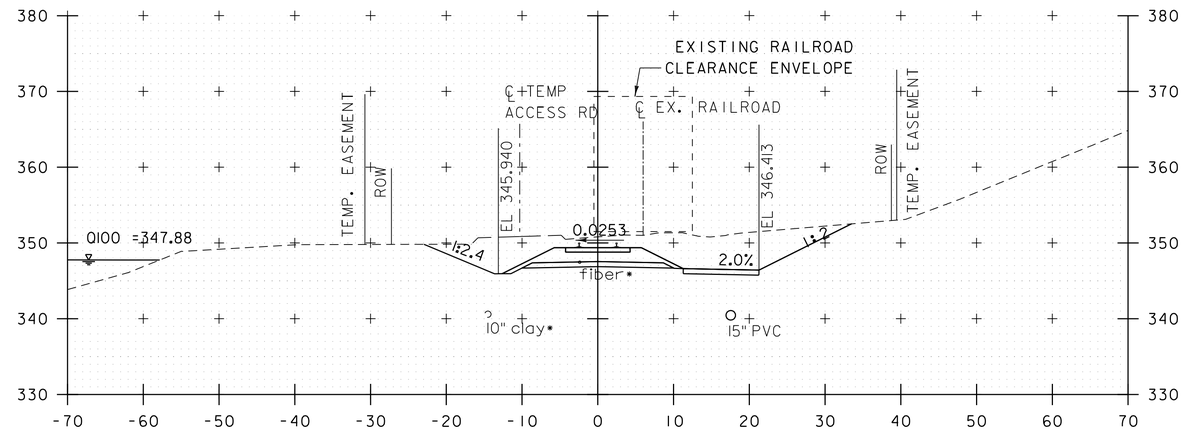

BEGIN STONE FILL, TYPE II
GEOTEXTILE UNDER STONE FILL
STA. 15+50, LT

15+00

BEGIN STONE FILL TYPE II
GEOTEXTILE UNDER STONE FILL
GRUBBING MATERIAL
STA. 15+13, RT

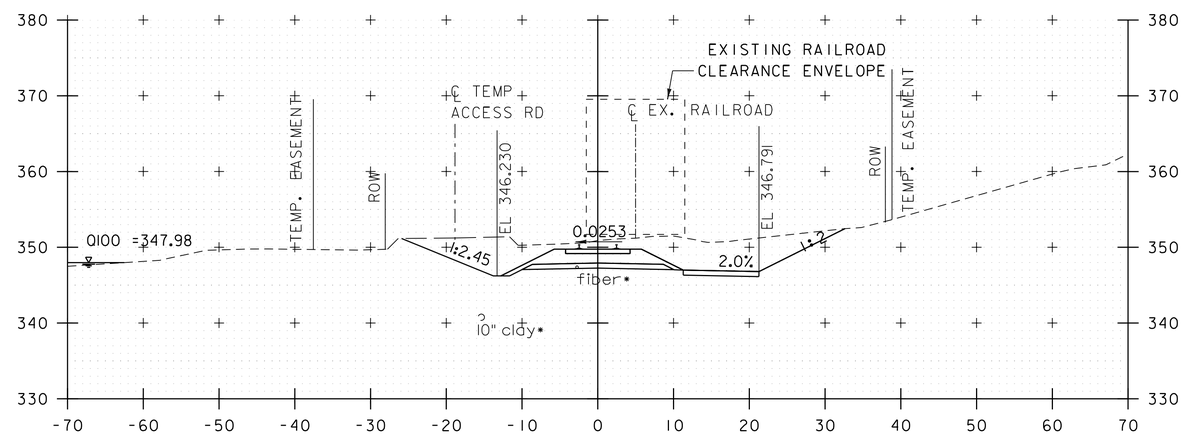

14+50

• TO BE REMOVED

RAILROAD CROSS SECTIONS

STA. 13+00 - 15+00
SCALE 1" = 10'-0"

PROJECT NAME: MIDDLEBURY	
PROJECT NUMBER: WCRS(23)	
FILE NAME: zl3g542xs_rail.dgn	PLOT DATE: 4/30/2019
PROJECT LEADER: A.P. GUYETTE	DRAWN BY: D.M. PECK
DESIGNED BY: M.F. SUFFEL	CHECKED BY: M.F. SUFFEL
RAILROAD CROSS SECTIONS (2 OF 16)	SHEET 252 OF 328

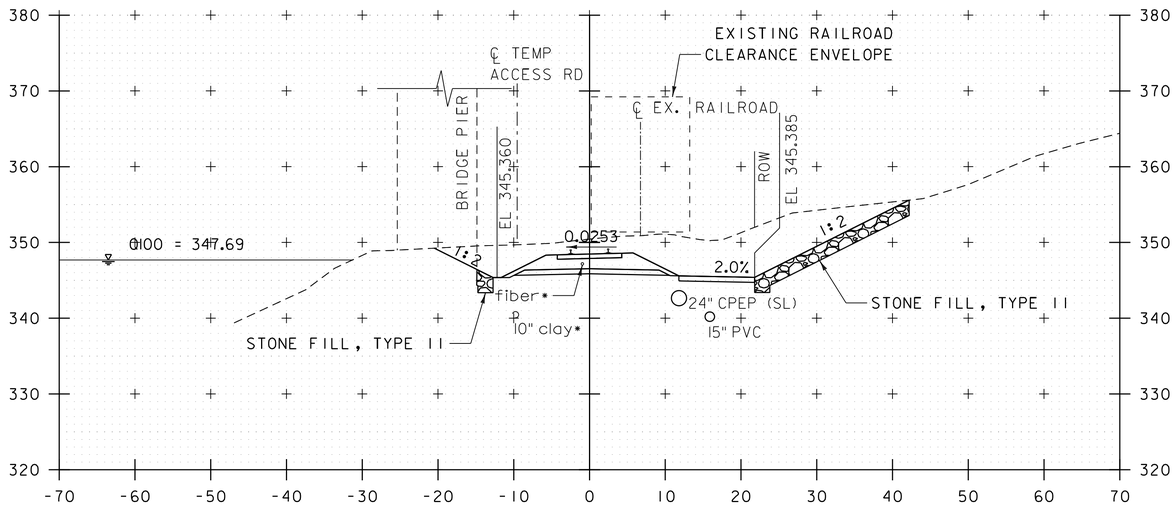

BEGIN GRUBBING MATERIAL
STA. 16+03, LT

16+00

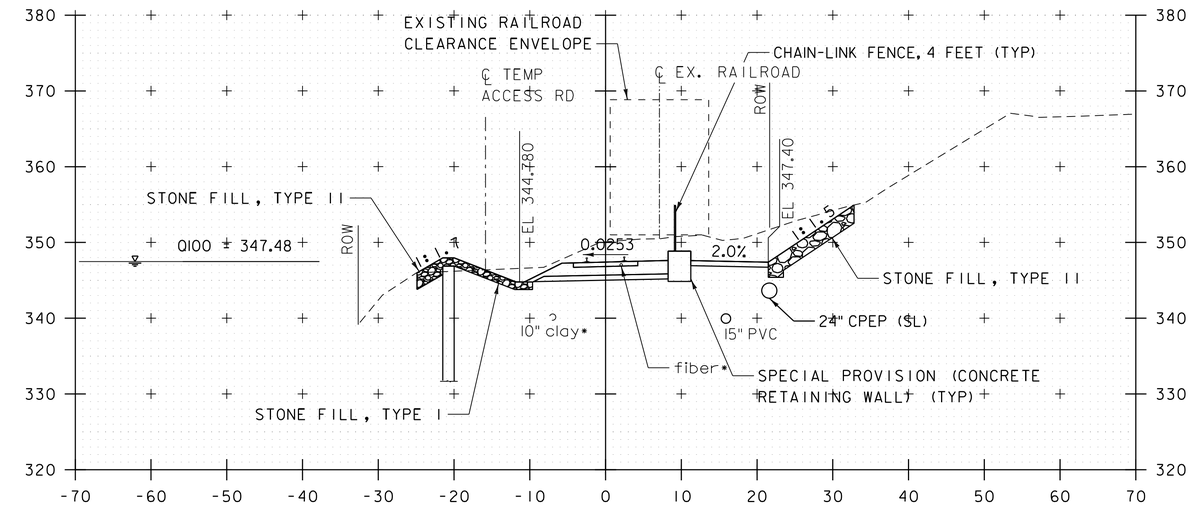

17+00

BEGIN RETAINING WALL
STA 16+75.00

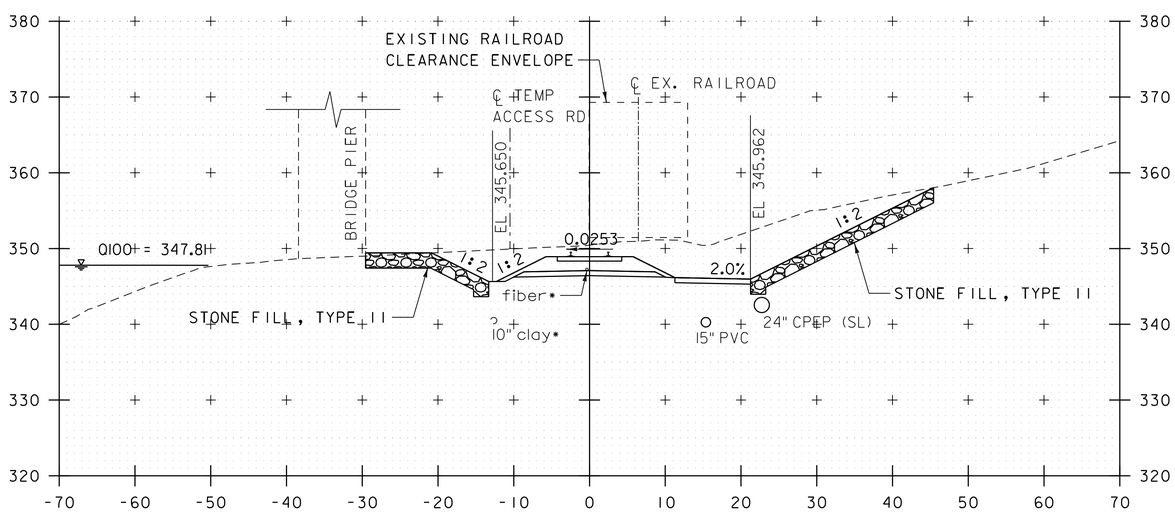

15+50

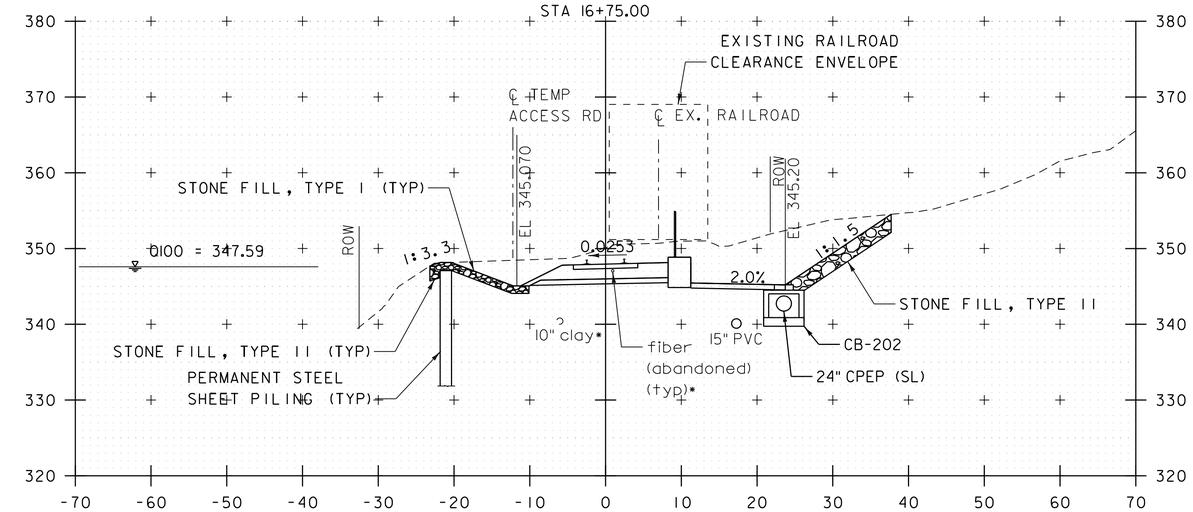

BEGIN PERMANENT STEEL SHEET PILING
STONE FILL, TYPE I
STA. 16+24.80, LT

16+50

BEGIN CHAIN-LINK FENCE
SPECIAL PROVISION (CONCRETE
RETAINING WALL)
STA. 16+50.00, RT

RAILROAD CROSS SECTIONS

STA. 15+50 - 17+00
SCALE 1" = 10'-0"

NOTES:

1. PART OF TEMPORARY ACCESS ROAD WILL NEED TO BE REMOVED FOR INSTALLATION OF RAILROAD BALLAST AND RESET TRACK.

2. GRUBBING MATERIAL NOT SHOWN FOR CLARITY.

* TO BE REMOVED

PROJECT NAME: MIDDLEBURY	
PROJECT NUMBER: WCRS(23)	
FILE NAME: zl3g542xs_rail.dgn	PLOT DATE: 4/30/2019
PROJECT LEADER: A.P. GUYETTE	DRAWN BY: D.M. PECK
DESIGNED BY: M.F. SUFFEL	CHECKED BY: M.F. SUFFEL
RAILROAD CROSS SECTIONS (3 OF 16)	SHEET 253 OF 328

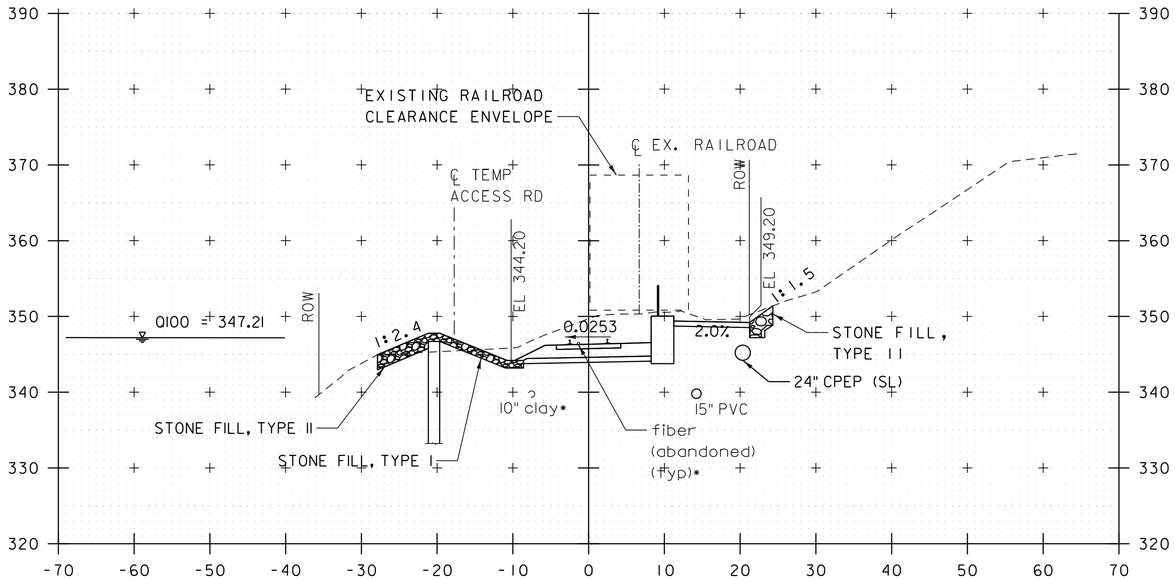

18+00

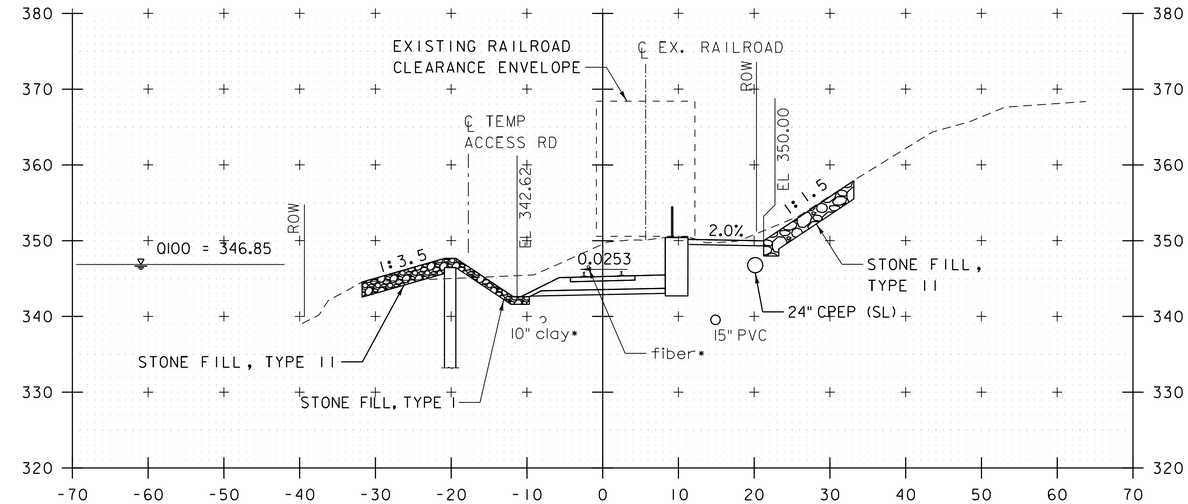

19+00

END STONE FILL TYPE II
GEOTEXTILE UNDER STONE FILL
GRUBBING MATERIAL
STA. 19+23, RT

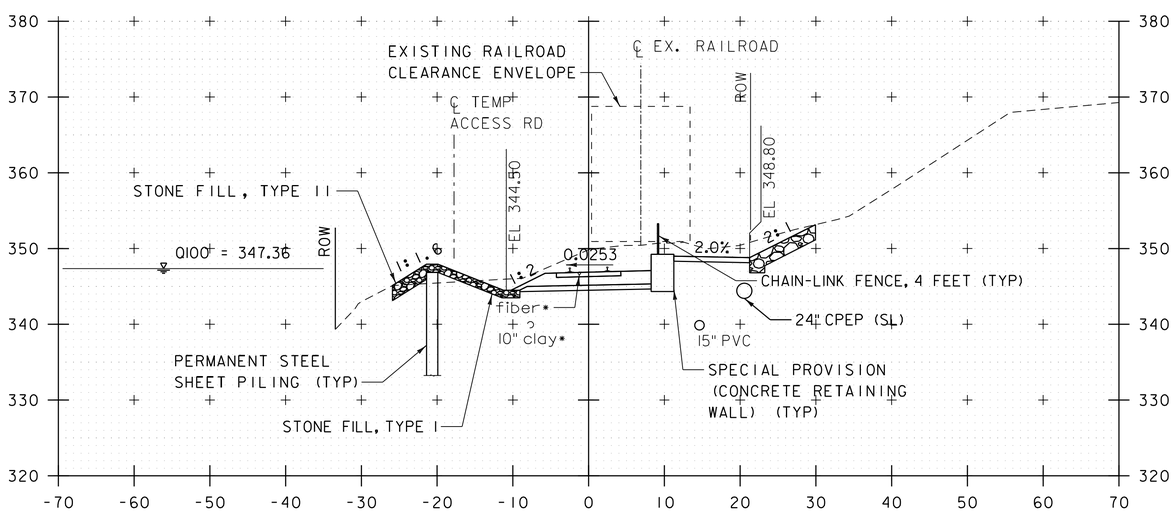

17+50

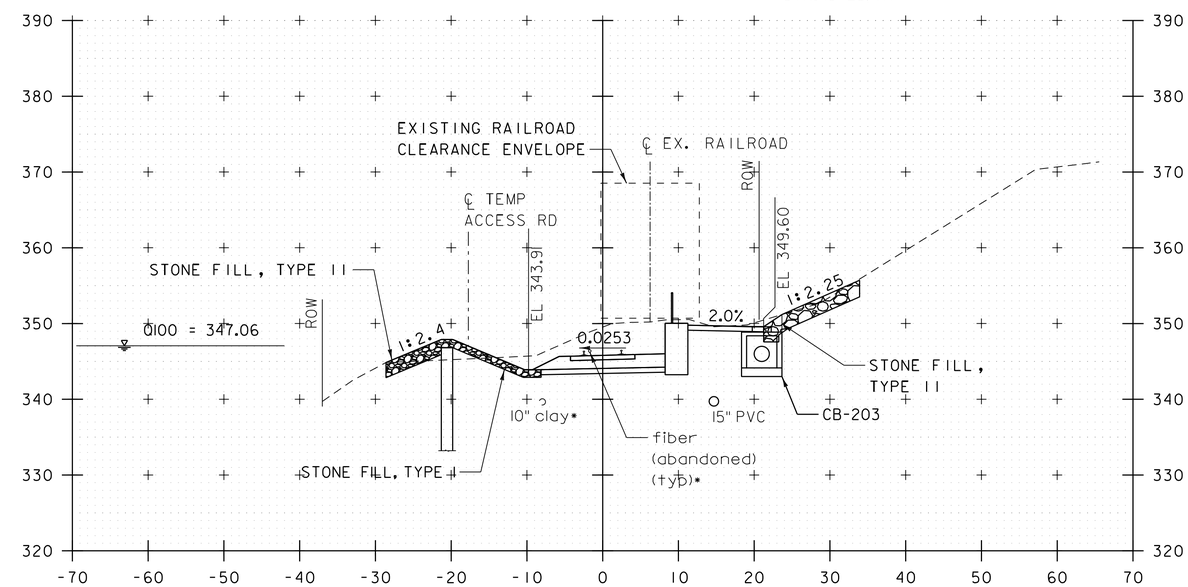

18+50

* TO BE REMOVED

RAILROAD CROSS SECTIONS

STA. 17+50 - 19+00
SCALE 1" = 10'-0"

NOTES:

1. GRUBBING MATERIAL NOT SHOWN FOR CLARITY.

PROJECT NAME: MIDDLEBURY	
PROJECT NUMBER: WCRS(23)	
FILE NAME: zl3g542xs_rail.dgn	PLOT DATE: 4/30/2019
PROJECT LEADER: A.P. GUYETTE	DRAWN BY: D.M. PECK
DESIGNED BY: M.F. SUFFEL	CHECKED BY: M.F. SUFFEL
RAILROAD CROSS SECTIONS (4 OF 16)	SHEET 254 OF 328

vhb

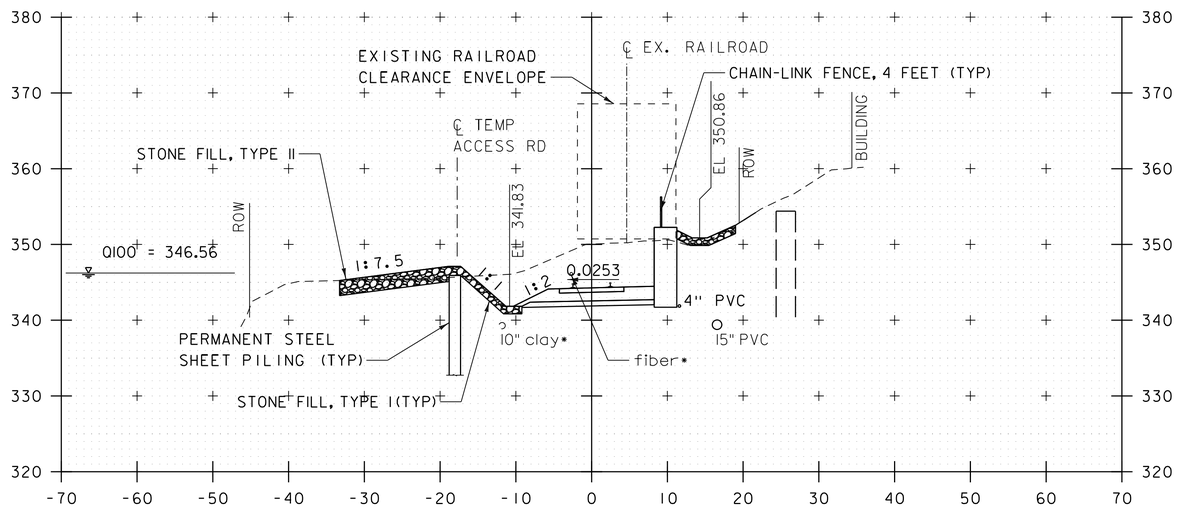

END PERMANENT STEEL SHEET PILING
STONE FILL, TYPE I & TYPE II
GEOTEXTILE UNDER STONE FILL
GRUBBING MATERIAL
STA. 20+03, LT

END CHAIN-LINK FENCE, 4 FEET
STA. 20+01, RT
BEGIN STONE FILL, TYPE I
STA. 19+90, RT

20+00

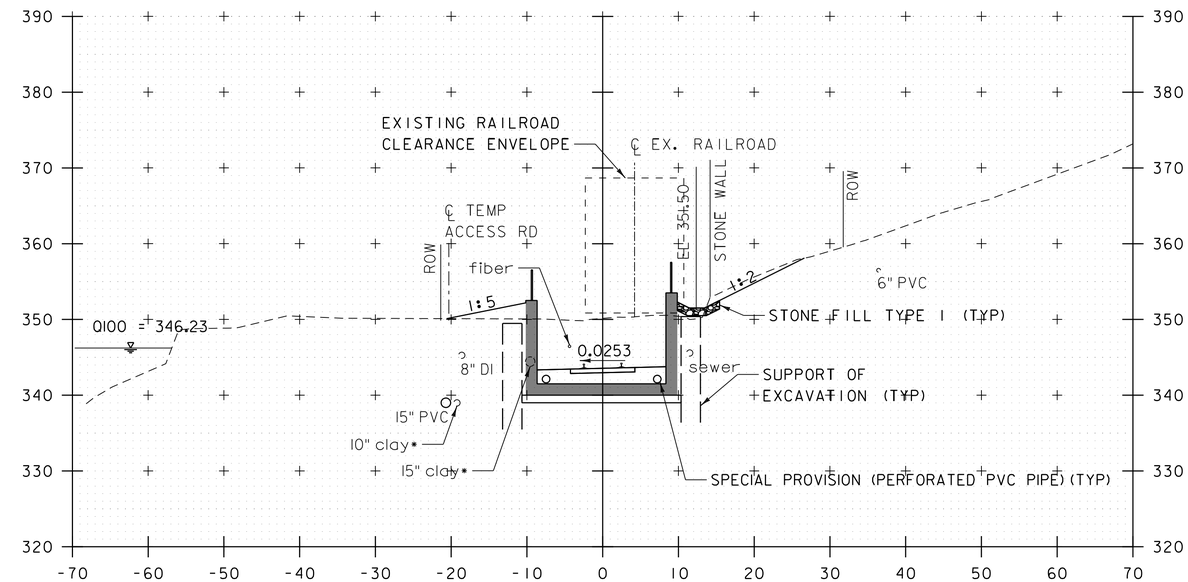

21+00

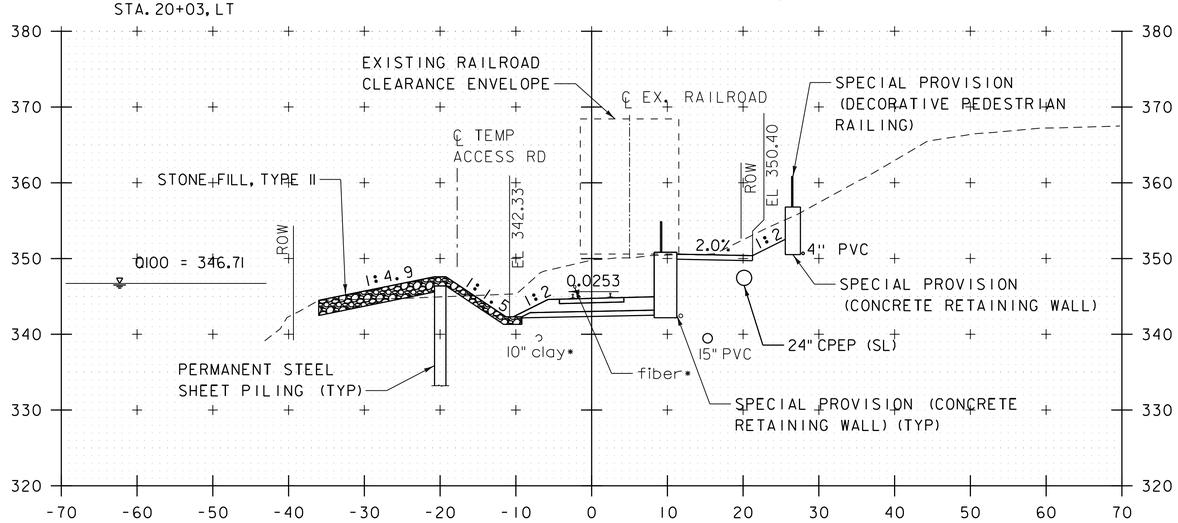

BEGIN SPECIAL PROVISION (CONCRETE RETAINING WAL)
STA. 19+35, RT
END SPECIAL PROVISION (CONCRETE RETAINING WALL)
STA 19+90, RT

19+50

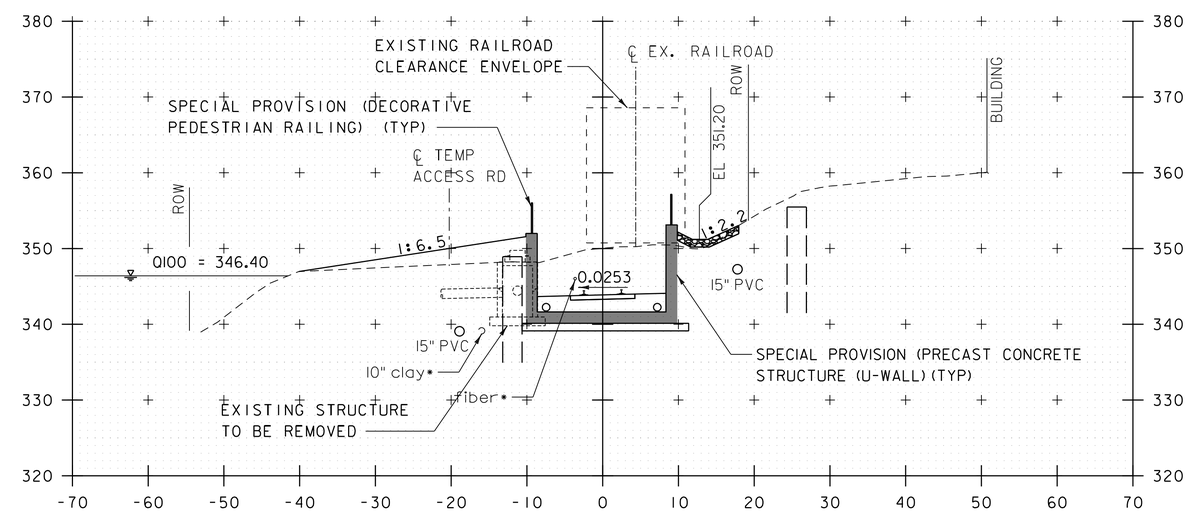

BEGIN SPECIAL PROVISION (DECORATIVE
PEDESTRIAN RAILING)
PRECAST CONCRETE STRUCTURE (U-WALL)
STA. 20+01, LT & RT

END SPECIAL PROVISION (CONCRETE RETAINING WALL)
STA 20+01, RT

20+50

RAILROAD CROSS SECTIONS

STA. 19+50 - 21+00
SCALE 1" = 10'-0"

NOTES:

1. GRUBBING MATERIAL NOT SHOWN FOR CLARITY.

* TO BE REMOVED

PROJECT NAME: MIDDLEBURY	
PROJECT NUMBER: WCRS(23)	
FILE NAME: zl3g542xs_rail.dgn	PLOT DATE: 4/30/2019
PROJECT LEADER: A.P. GUYETTE	DRAWN BY: D.M. PECK
DESIGNED BY: M.F. SUFFEL	CHECKED BY: M.F. SUFFEL
RAILROAD CROSS SECTIONS (5 OF 16)	SHEET 255 OF 328

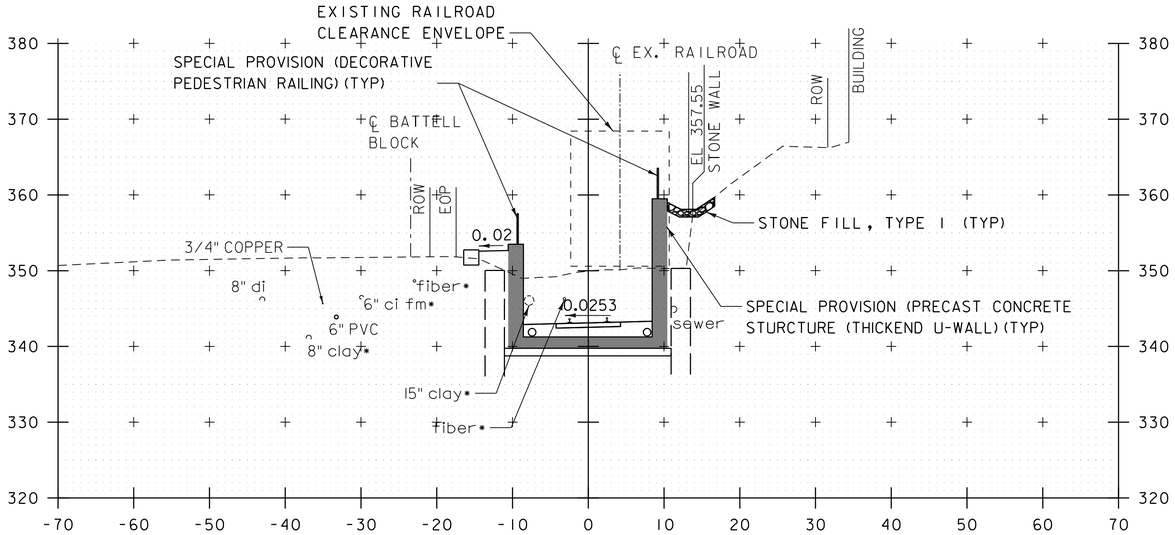

22+00

END PRECAST CONCRETE STRUCTURE (U-WALL)
BEGIN PRECAST CONCRETE STRUCTURE (THICKENED U-WALL)
STA 21+92.50

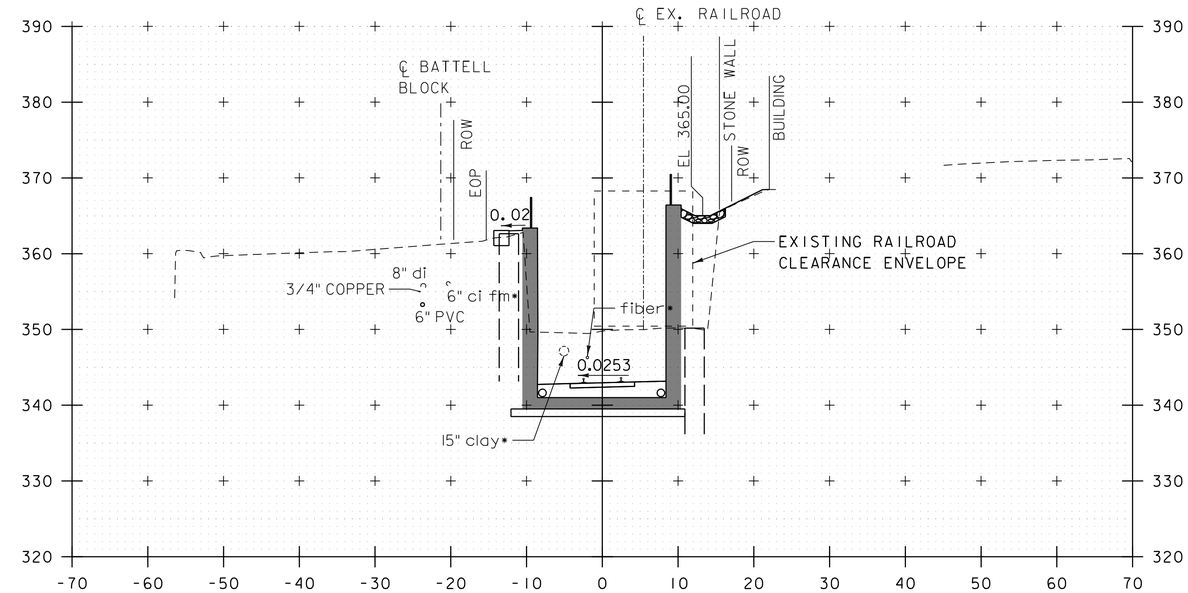

END SPECIAL PROVISION (DECORATIVE
PEDESTRIAN HANDRAILING)
STA. 23+24, LT & RT

END STONE FILL, TYPE I
STA. 23+24, RT

23+00

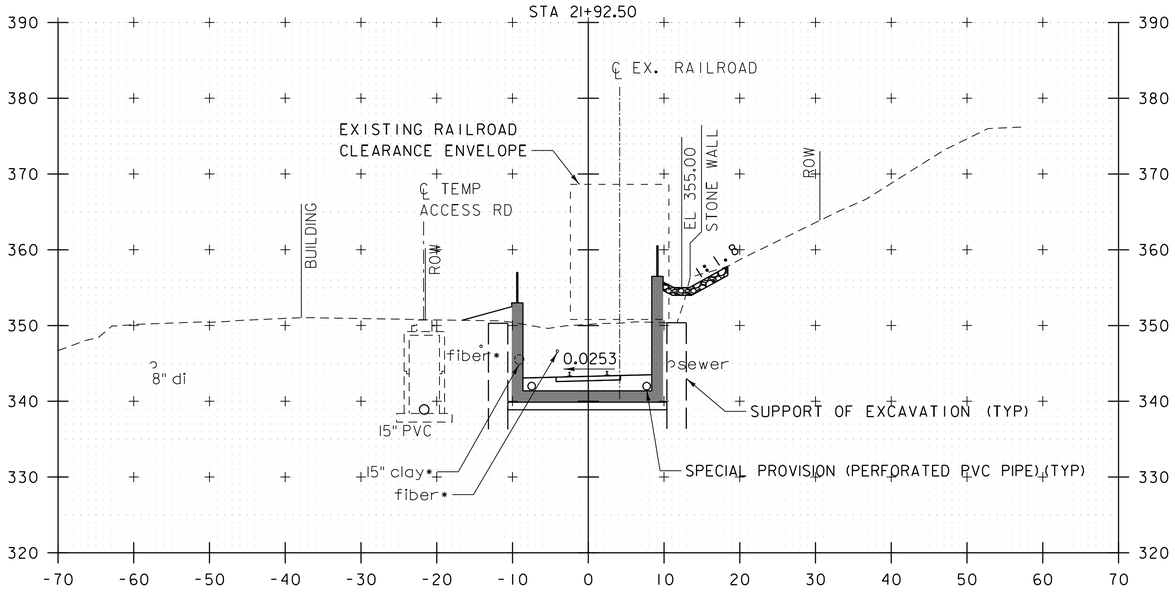

21+50

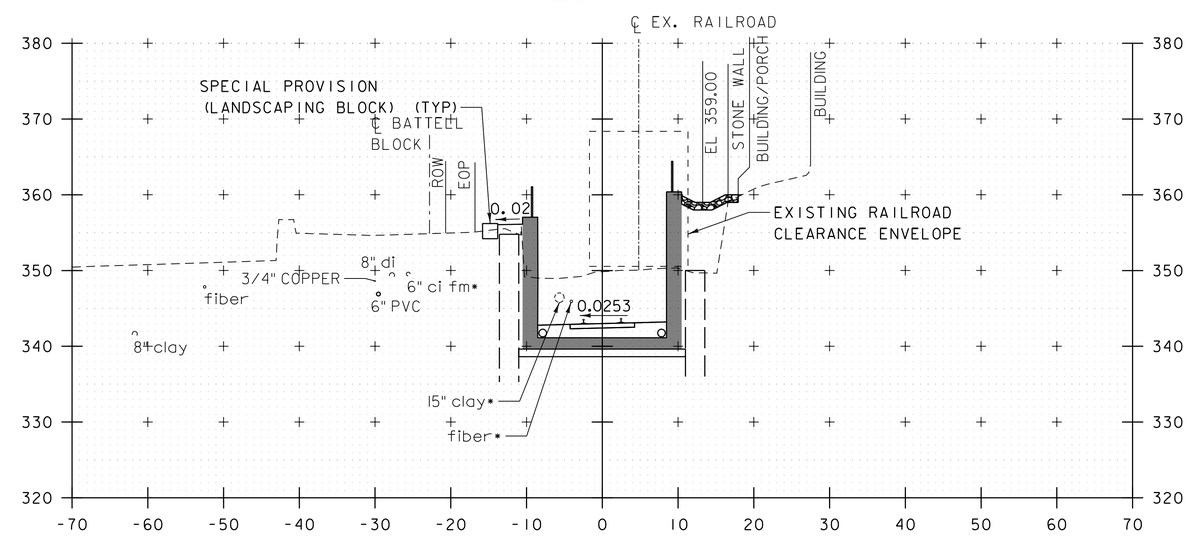

22+50

* TO BE REMOVED

RAILROAD CROSS SECTIONS

STA. 21+50 - 23+00
SCALE 1" = 10'-0"

PROJECT NAME: MIDDLEBURY	
PROJECT NUMBER: WCRS(2#)	
FILE NAME: z13g542xs_rail.dgn	PLOT DATE: 4/30/2019
PROJECT LEADER: A.P. GUYETTE	DRAWN BY: D.M. PECK
DESIGNED BY: M.F. SUFFEL	CHECKED BY: M.F. SUFFEL
RAILROAD CROSS SECTIONS (6 OF 16)	SHEET 256 OF 328

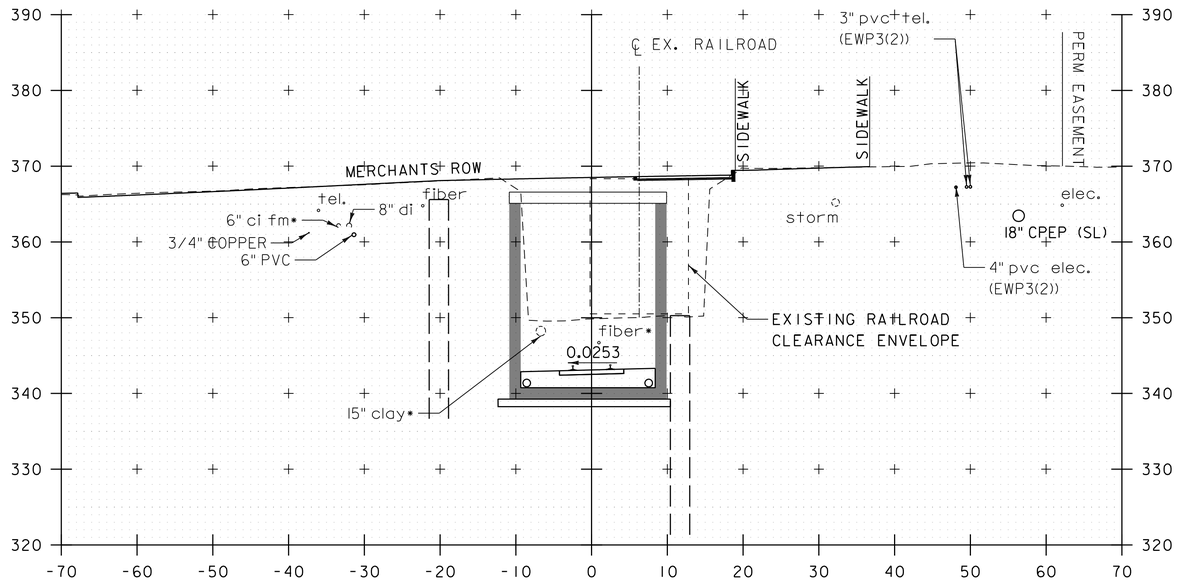

24+00

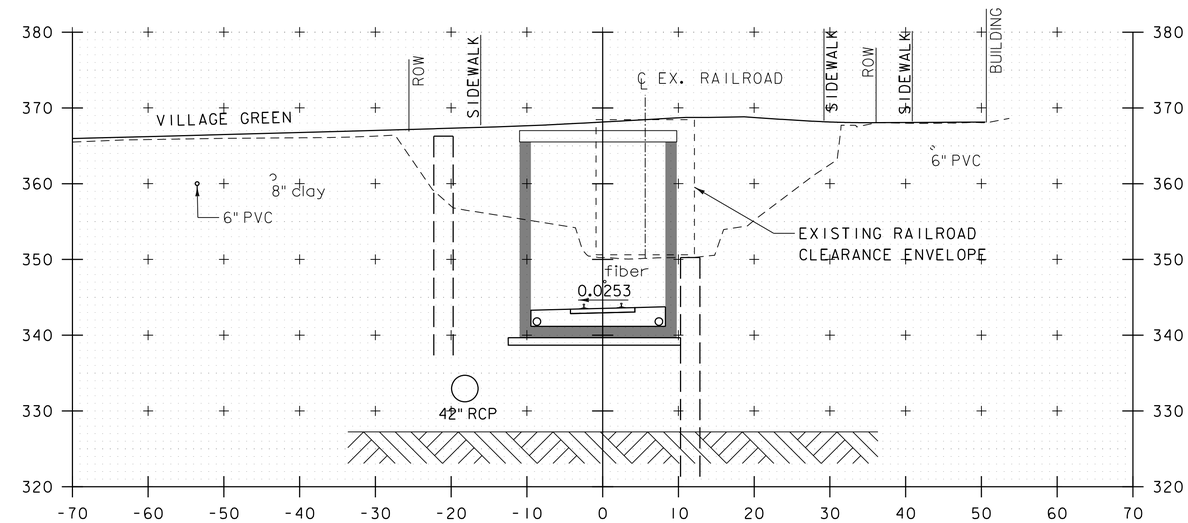

25+00

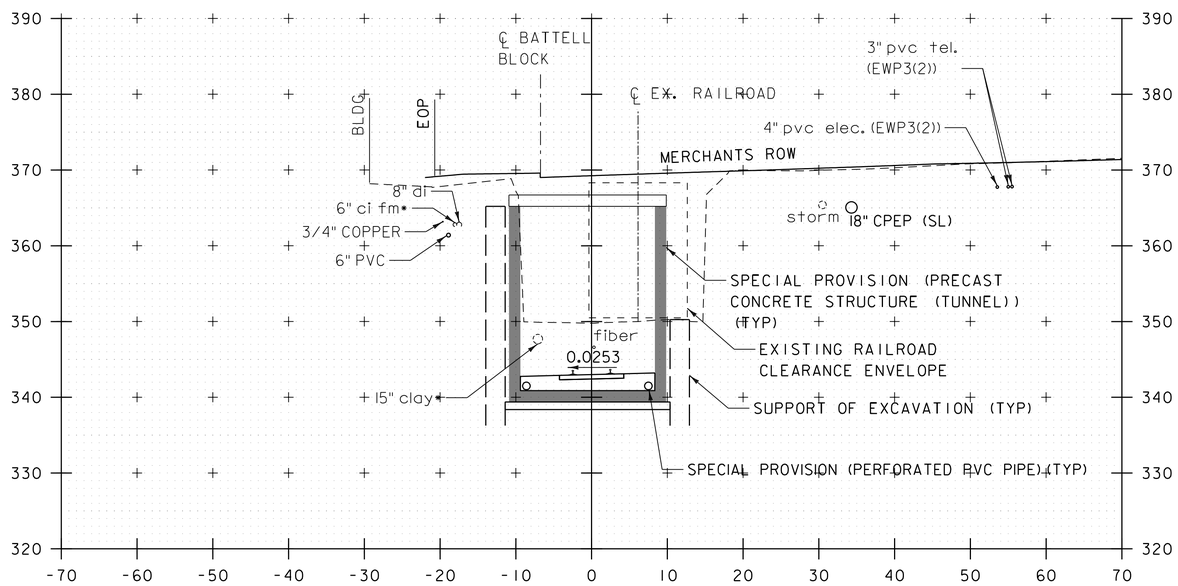

23+50

END PRECAST CONCRETE STRUCTURE (THICKENED U-WALL)
BEGIN PRECAST CONCRETE STRUCTURE (TUNNEL)
STA 23+23.75

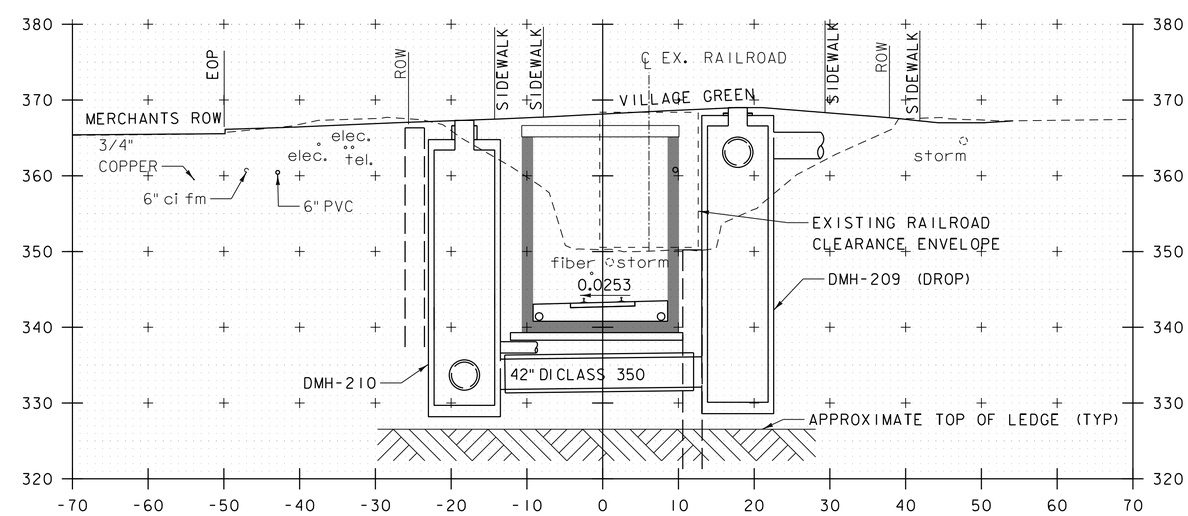

24+50

* TO BE REMOVED

RAILROAD CROSS SECTIONS

STA. 23+50 - 25+00
SCALE 1" = 10'-0"

PROJECT NAME: MIDDLEBURY	
PROJECT NUMBER: WCRS(2#)	
FILE NAME: zl3g542xs_rail.dgn	PLOT DATE: 4/30/2019
PROJECT LEADER: A.P. GUYETTE	DRAWN BY: D.M. PECK
DESIGNED BY: M.F. SUFFEL	CHECKED BY: M.F. SUFFEL
RAILROAD CROSS SECTIONS (7 OF 16)	SHEET 257 OF 328

vhb

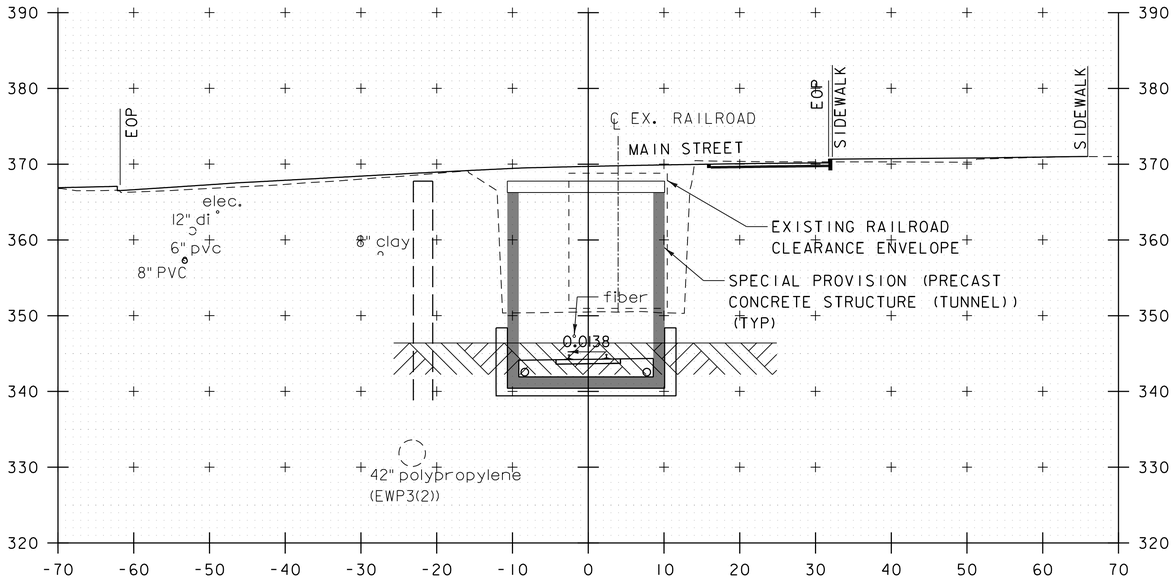

26+00

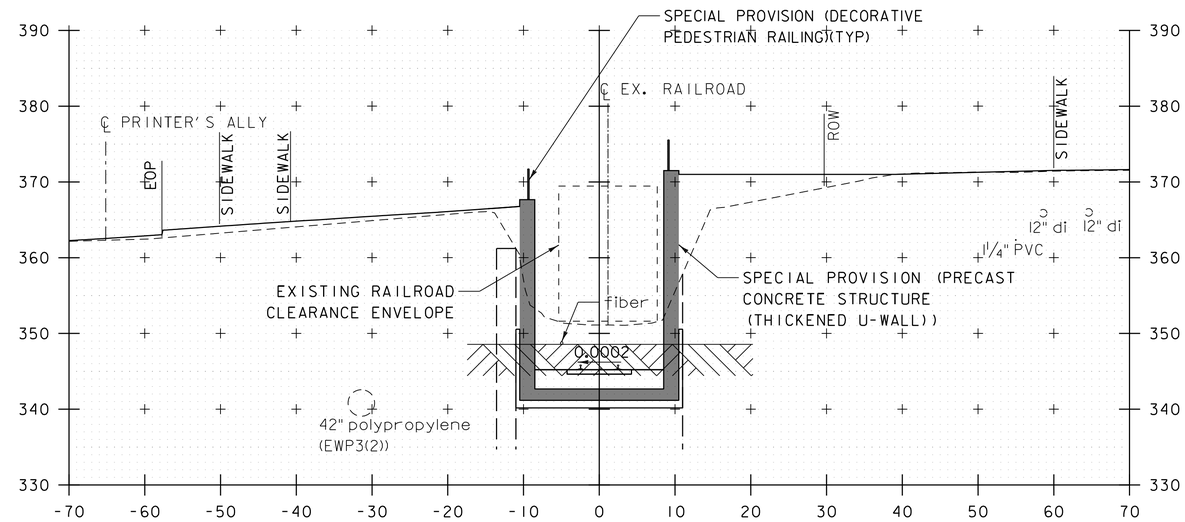

BEGIN SPECIAL PROVISION (DECORATIVE
PEDESTRIAN HANDRAILING)
STA. 26+69, LT & RT

27+00

END PRECAST CONCRETE STRUCTURE (TUNNEL)
BEGIN PRECAST CONCRETE STRUCTURE (THICKENED U-WALL)
STA 26+68.77

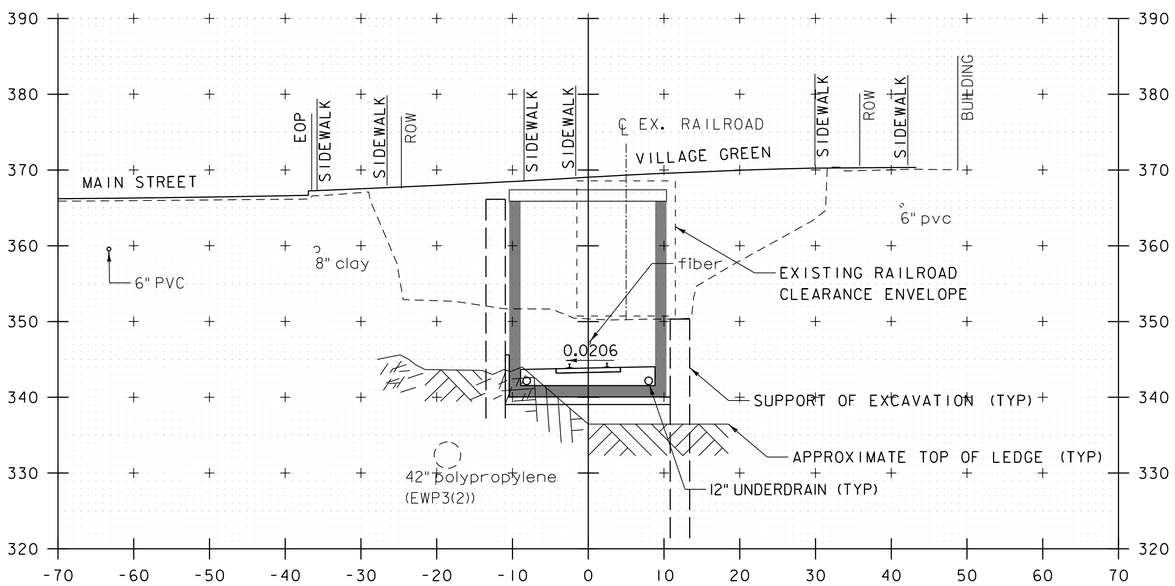

25+50

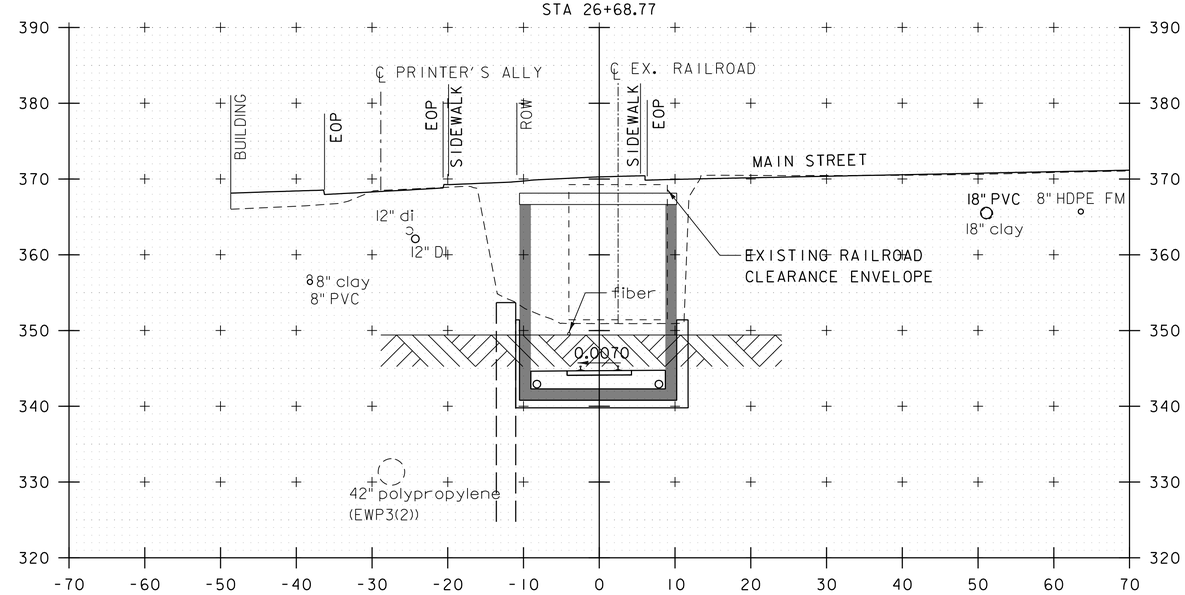

26+50

RAILROAD CROSS SECTIONS

STA. 25+50 - 27+00
SCALE 1" = 10'-0"

PROJECT NAME:	MIDDLDEBURY
PROJECT NUMBER:	WCRS(23)

FILE NAME: zl3g542xs_rail.dgn	PLOT DATE: 4/30/2019
PROJECT LEADER: A.P. GUYETTE	DRAWN BY: D.M. PECK
DESIGNED BY: M.F. SUFFEL	CHECKED BY: M.F. SUFFEL
RAILROAD CROSS SECTIONS (8 OF 16)	SHEET 258 OF 328

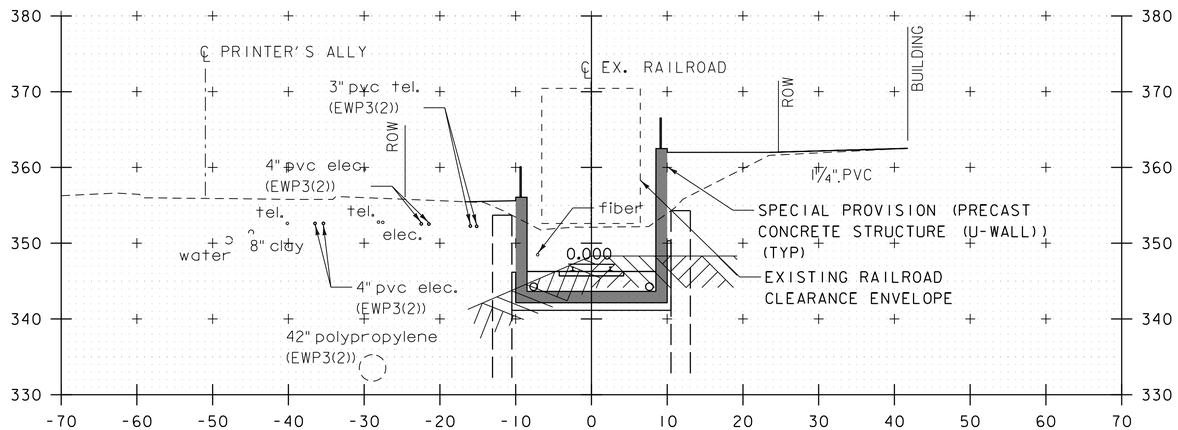

28+00

END PRECAST CONCRETE STRUCTURE (THICKENED U-WALL)
BEGIN PRECAST CONCRETE STRUCTURE (U-WALL)
STA 27+62.52

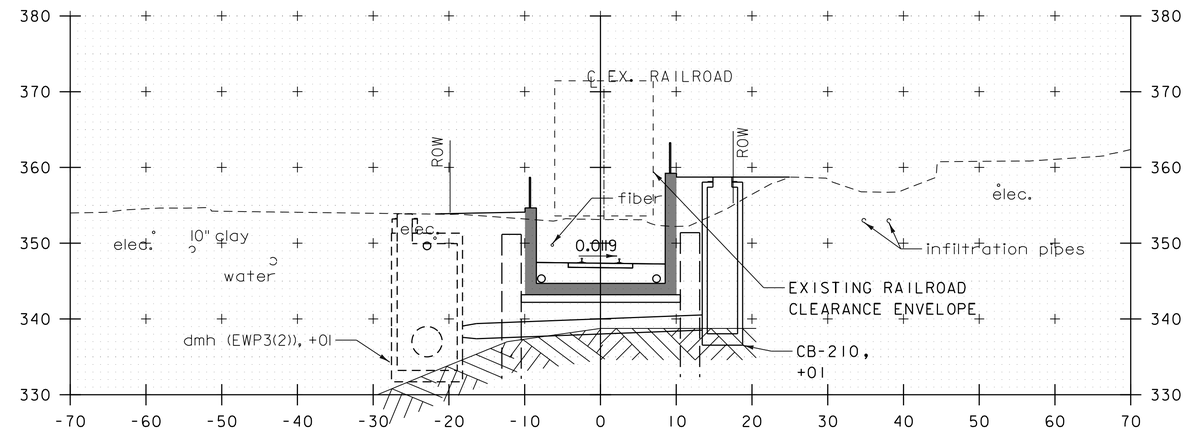

29+00

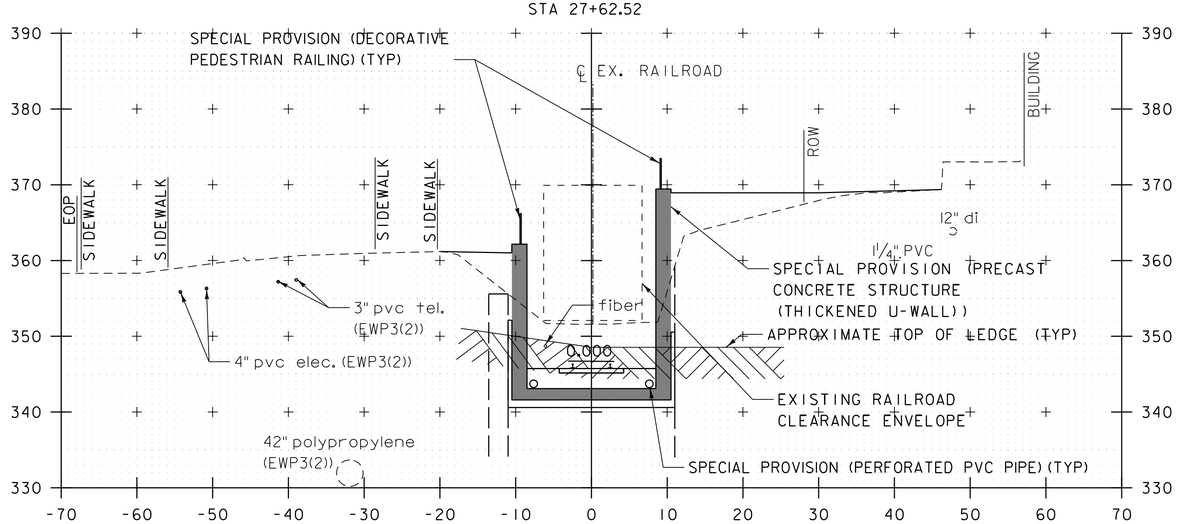

27+50

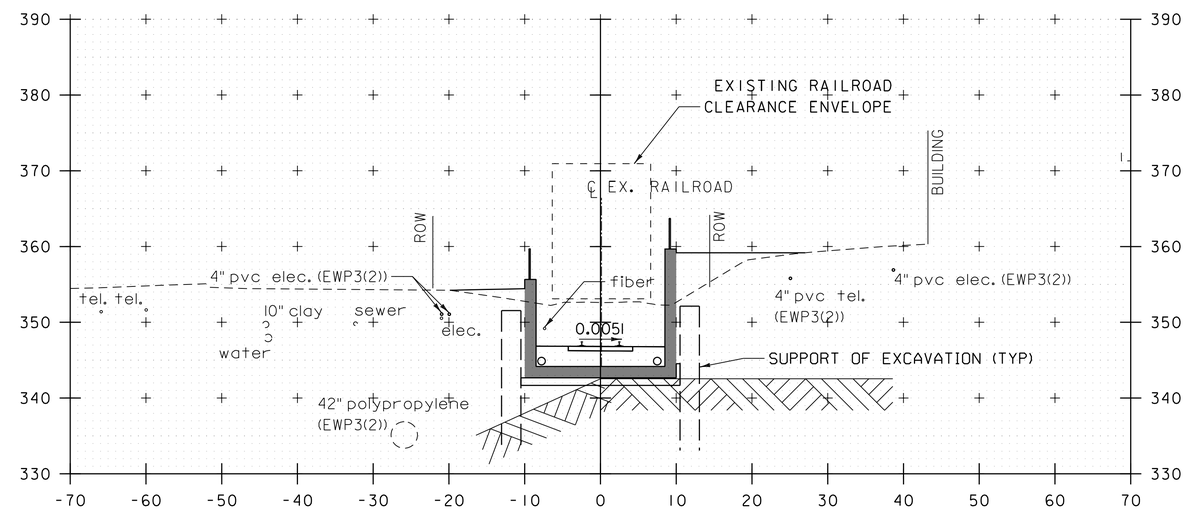

28+50

RAILROAD CROSS SECTIONS

STA. 27+50 - 29+00
SCALE 1" = 10'-0"

PROJECT NAME: MIDDLEBURY	
PROJECT NUMBER: WCRS(23)	
FILE NAME: zl3g542xs_rail.dgn	PLOT DATE: 4/30/2019
PROJECT LEADER: A.P. GUYETTE	DRAWN BY: D.M. PECK
DESIGNED BY: M.F. SUFFEL	CHECKED BY: M.F. SUFFEL
RAILROAD CROSS SECTIONS (9 OF 16)	SHEET 259 OF 328

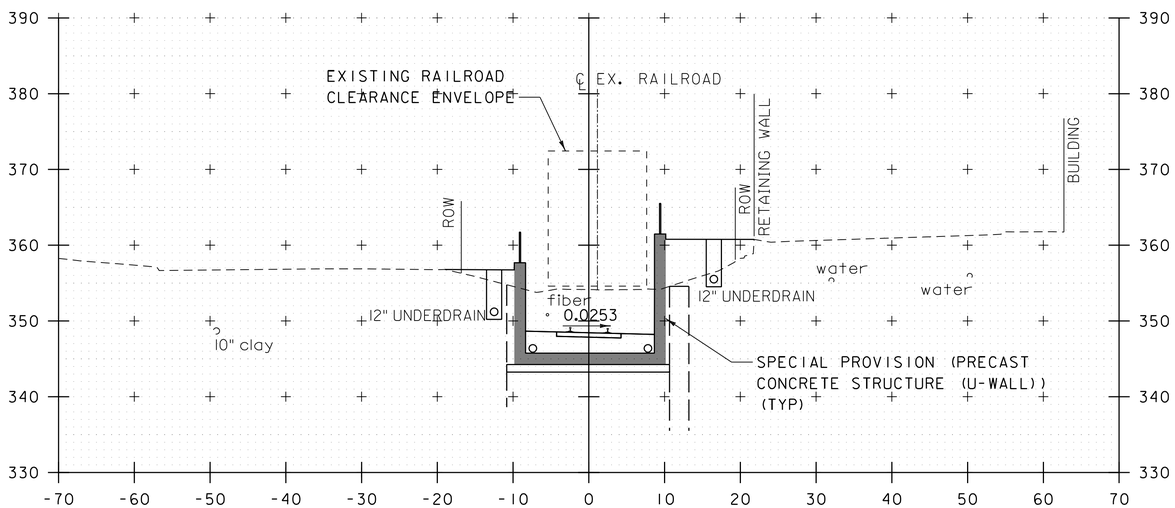

30+00

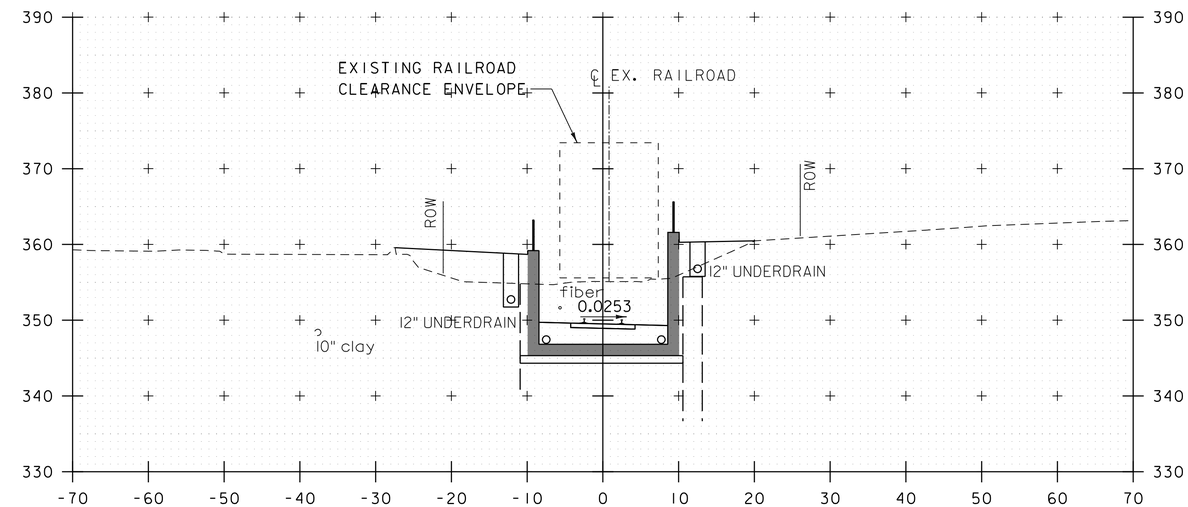

31+00

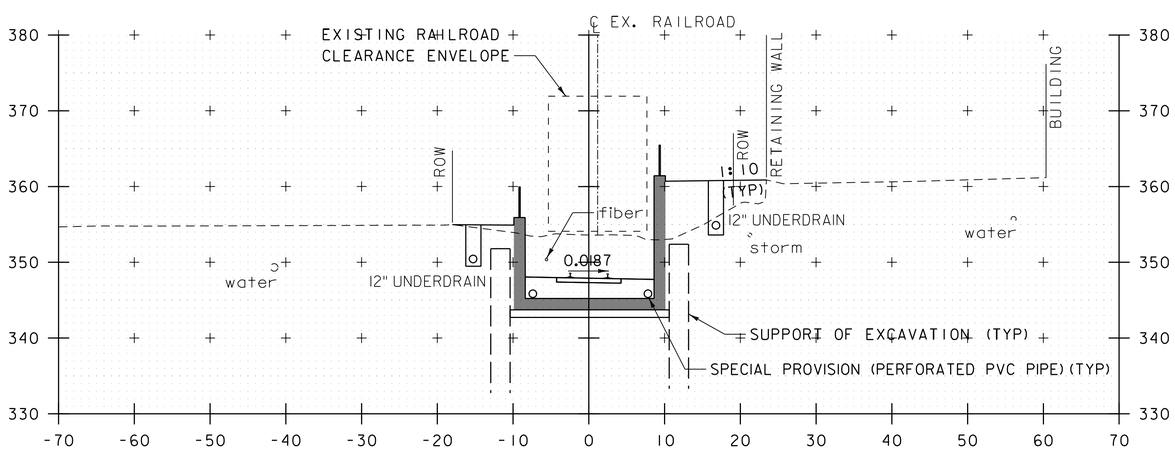

29+50

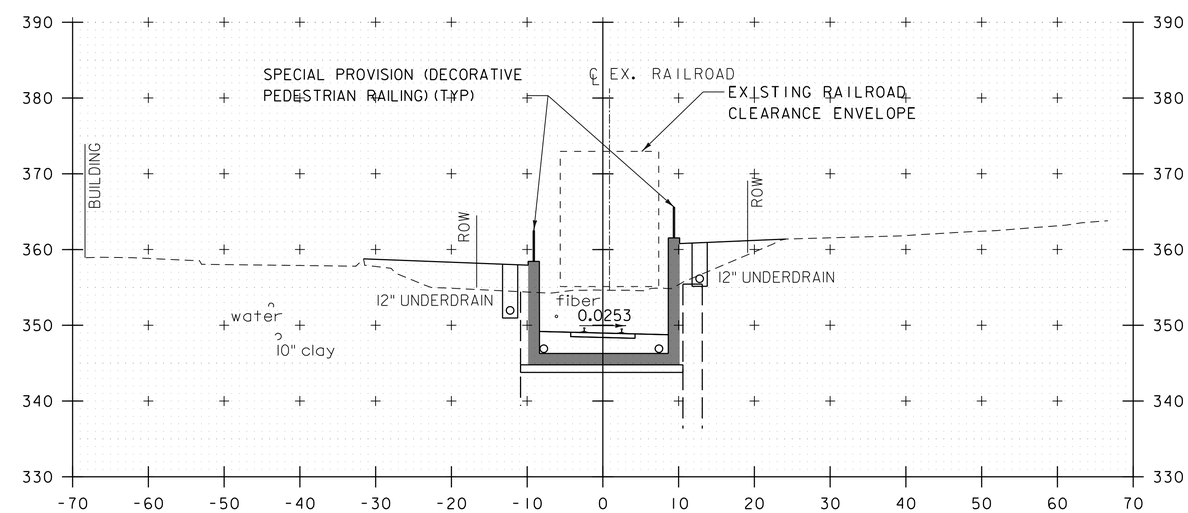

30+50

RAILROAD CROSS SECTIONS

STA. 29+50 - 31+00
SCALE 1" = 10'-0"

PROJECT NAME: MIDDLEBURY	
PROJECT NUMBER: WCRS(23)	
FILE NAME: z13g542xs_rail.dgn	PLOT DATE: 4/30/2019
PROJECT LEADER: A.P. GUYETTE	DRAWN BY: D.M. PECK
DESIGNED BY: M.F. SUFFEL	CHECKED BY: M.F. SUFFEL
RAILROAD CROSS SECTIONS (10 OF 16)	SHEET 260 OF 328

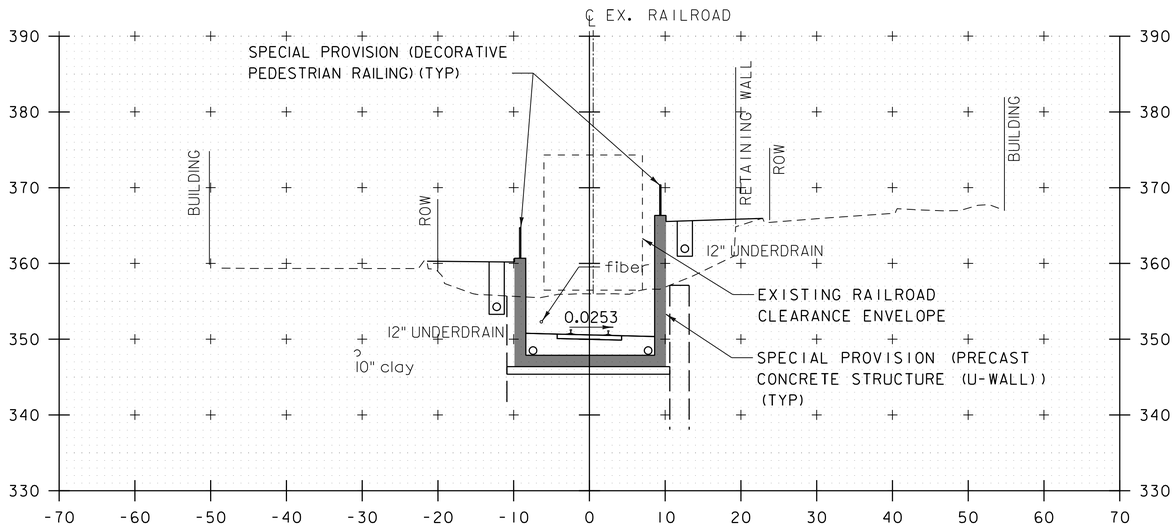

32+00

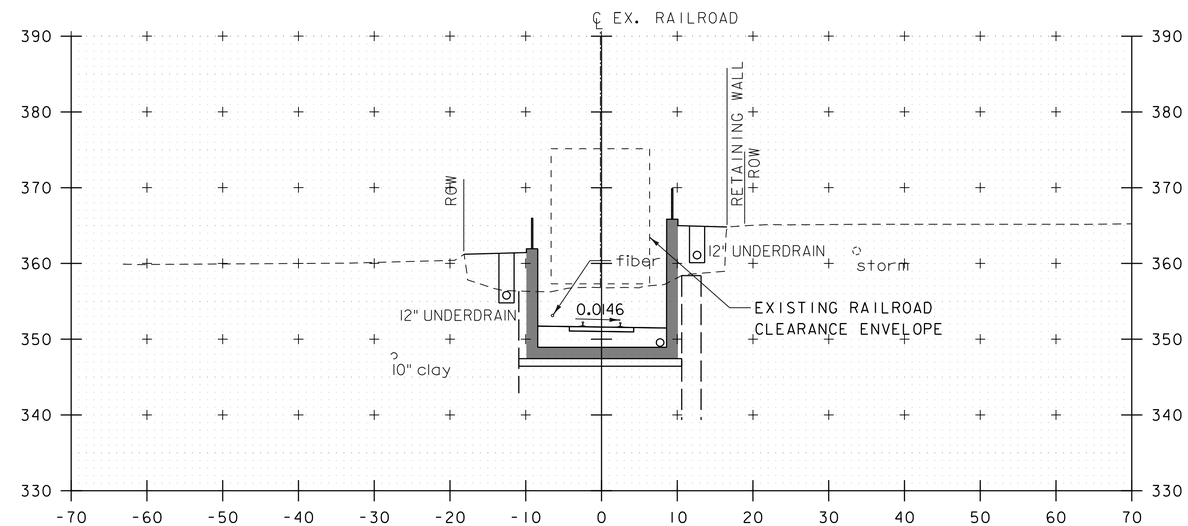

33+00

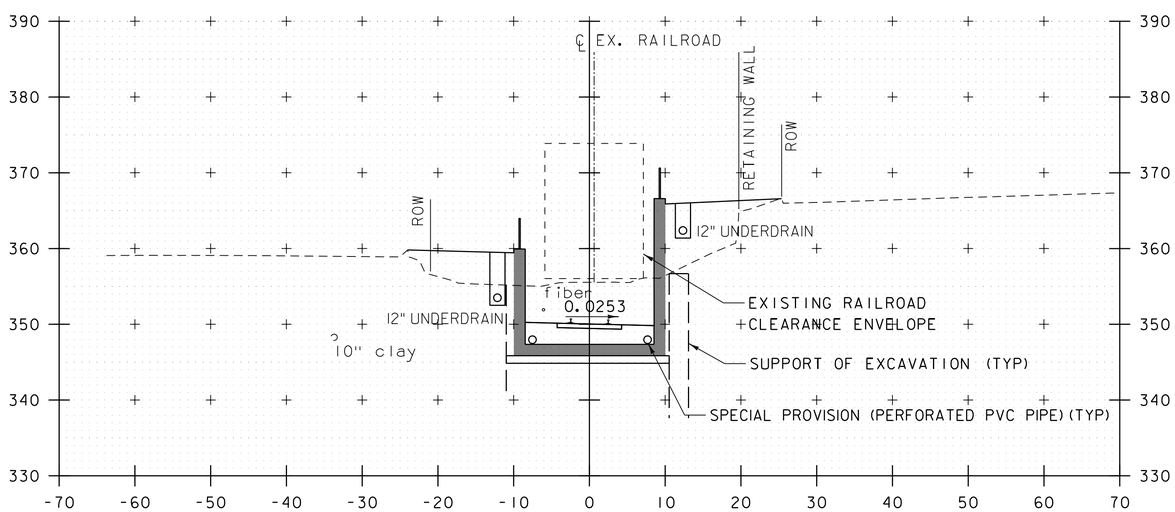

31+50

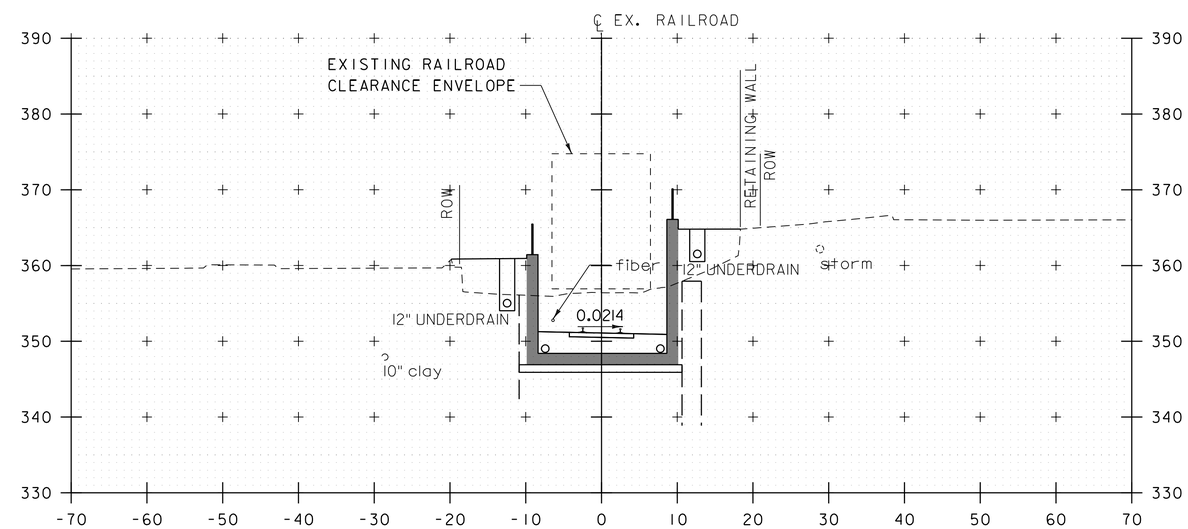

32+50

RAILROAD CROSS SECTIONS

STA. 31+50 - 33+00
SCALE 1" = 10'-0"

PROJECT NAME: MIDDLEBURY	
PROJECT NUMBER: WCRS(23)	
FILE NAME: zl3g542xs_rail.dgn	PLOT DATE: 4/30/2019
PROJECT LEADER: A.P. GUYETTE	DRAWN BY: D.M. PECK
DESIGNED BY: M.F. SUFFEL	CHECKED BY: M.F. SUFFEL
RAILROAD CROSS SECTIONS (11 OF 16)	SHEET 261 OF 328

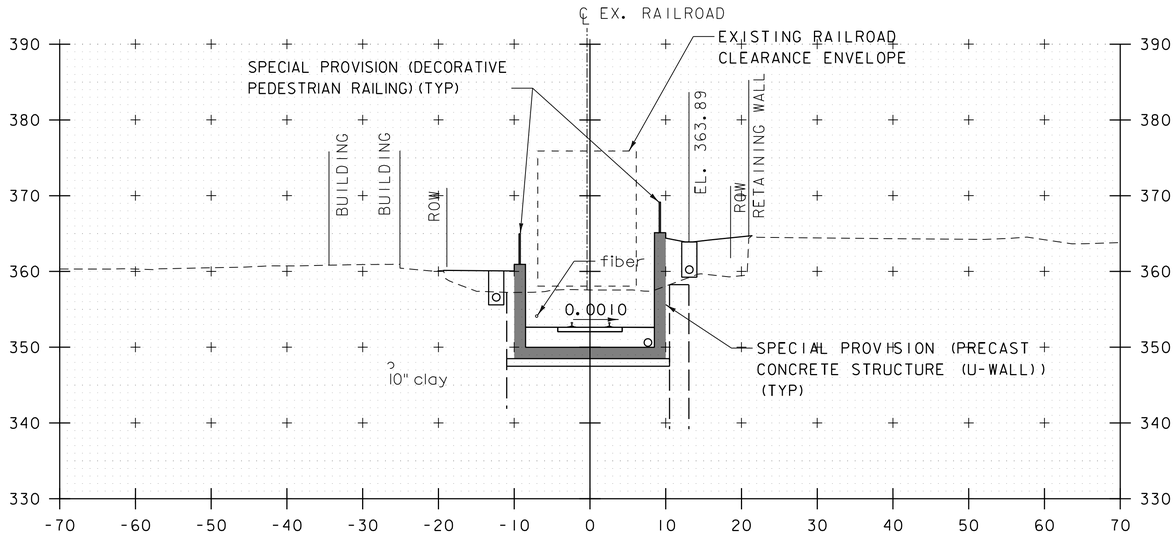

34+00

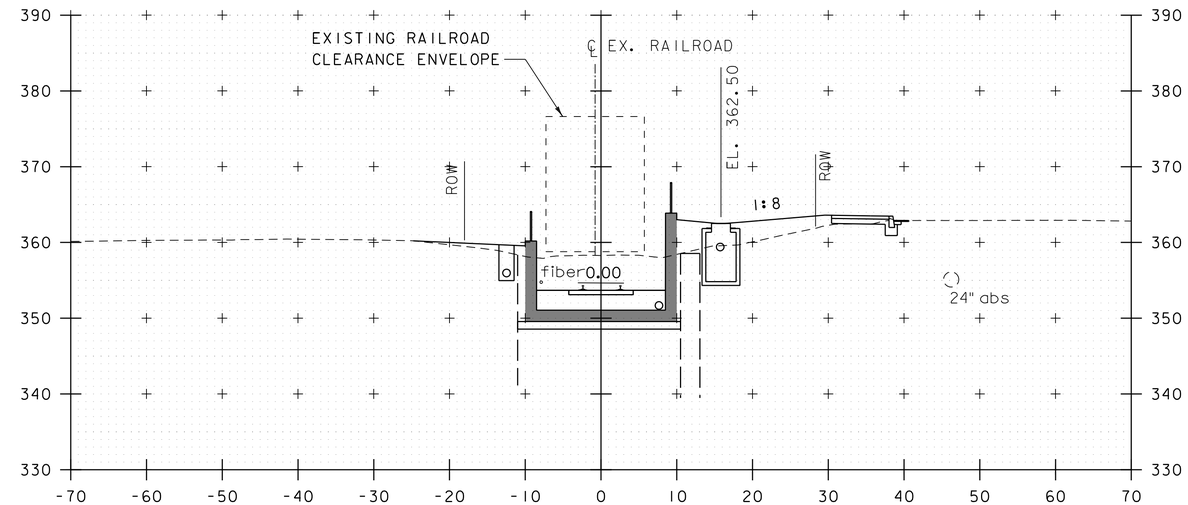

35+00

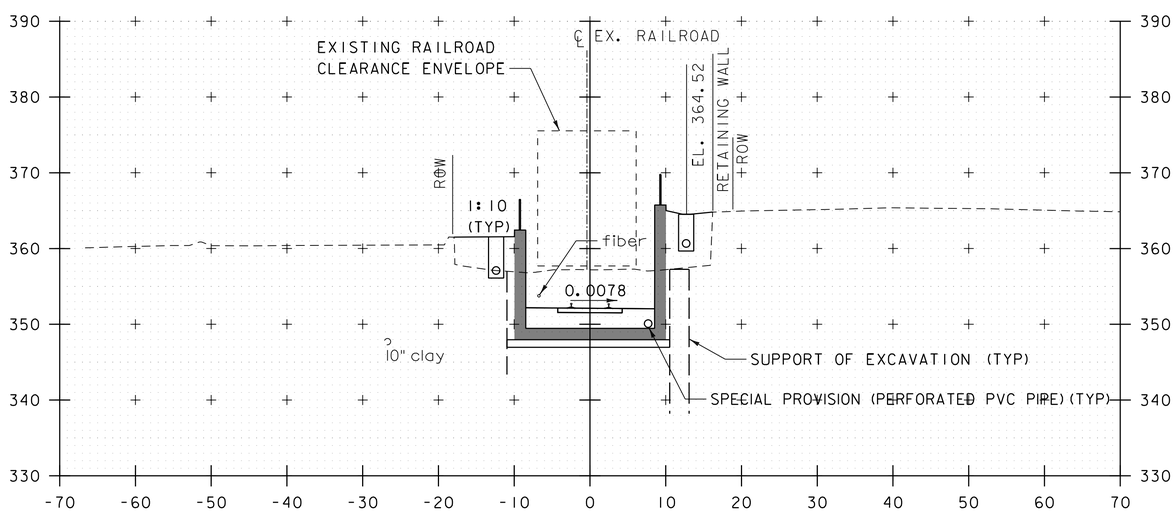

33+50

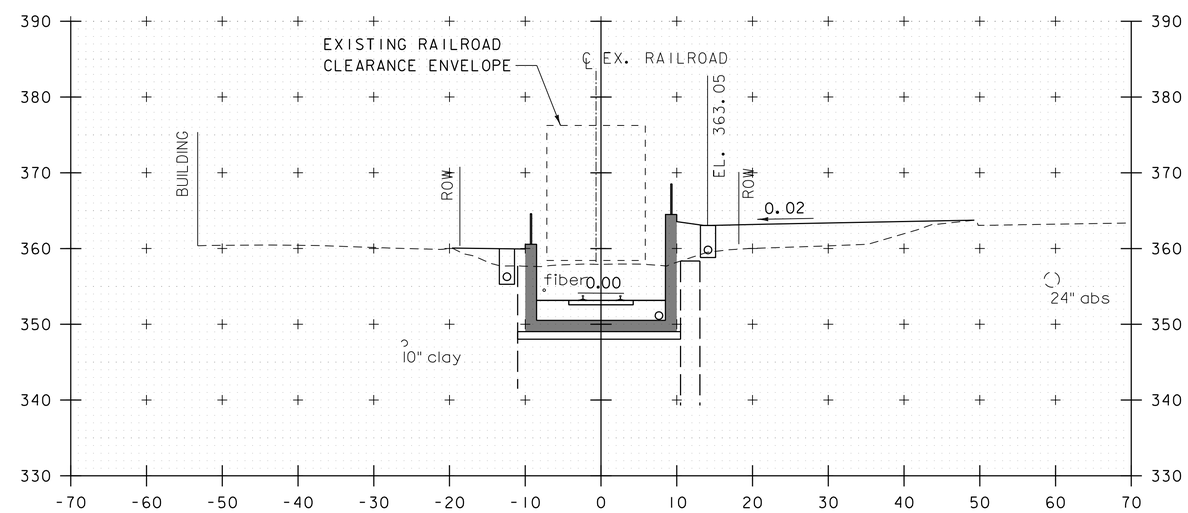

34+50

RAILROAD CROSS SECTIONS

STA. 33+50 - 35+00
SCALE 1" = 10'-0"

PROJECT NAME: MIDDLEBURY	
PROJECT NUMBER: WCRS(23)	
FILE NAME: zl3g542xs_rail.dgn	PLOT DATE: 4/30/2019
PROJECT LEADER: A.P. GUYETTE	DRAWN BY: D.M. PECK
DESIGNED BY: M.F. SUFFEL	CHECKED BY: M.F. SUFFEL
RAILROAD CROSS SECTIONS (12 OF 16)	SHEET 262 OF 328

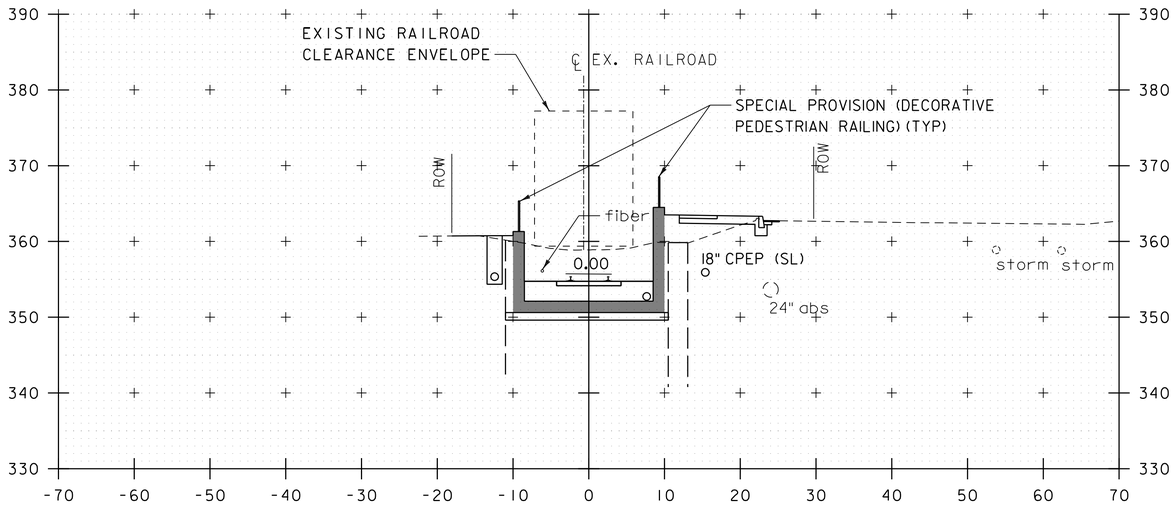

36+00

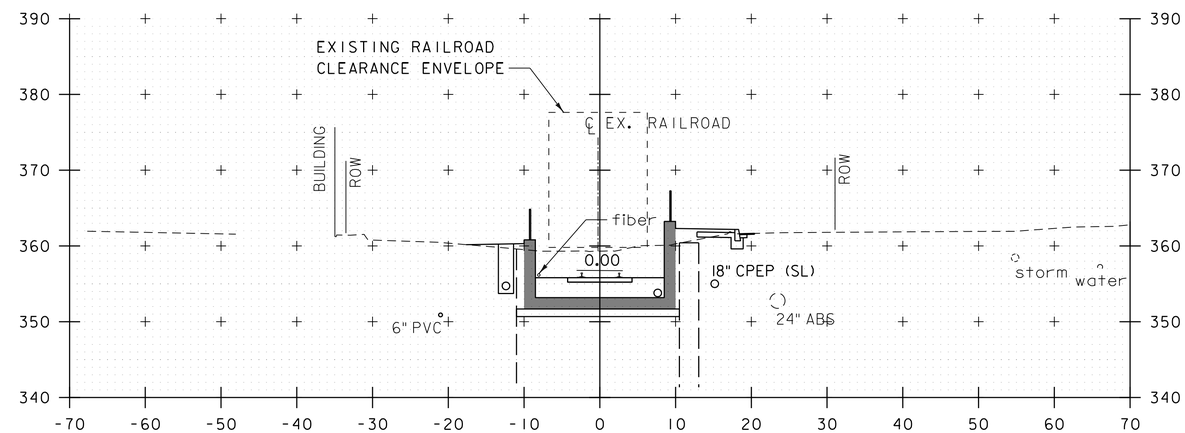

37+00

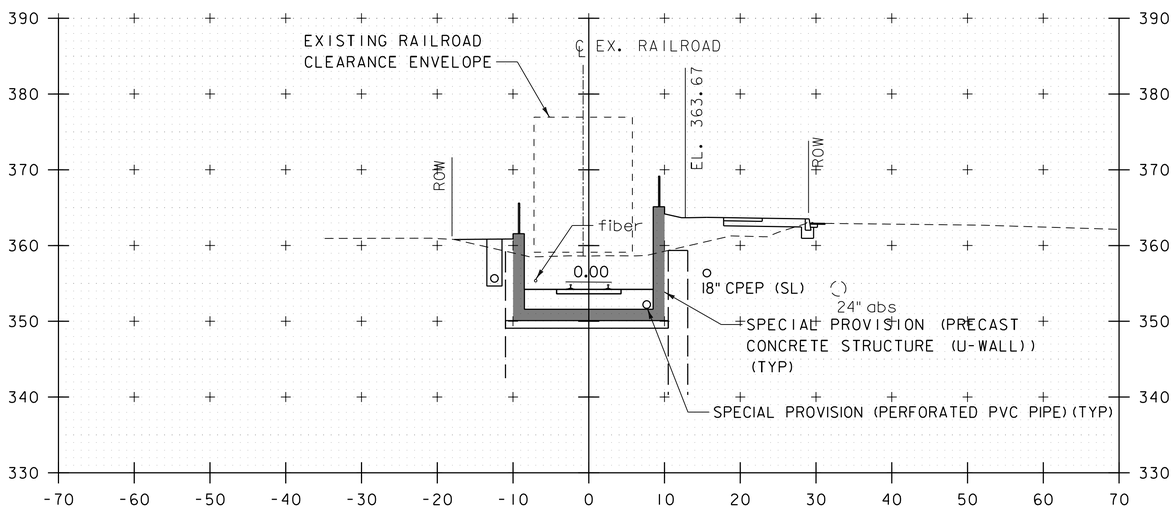

35+50

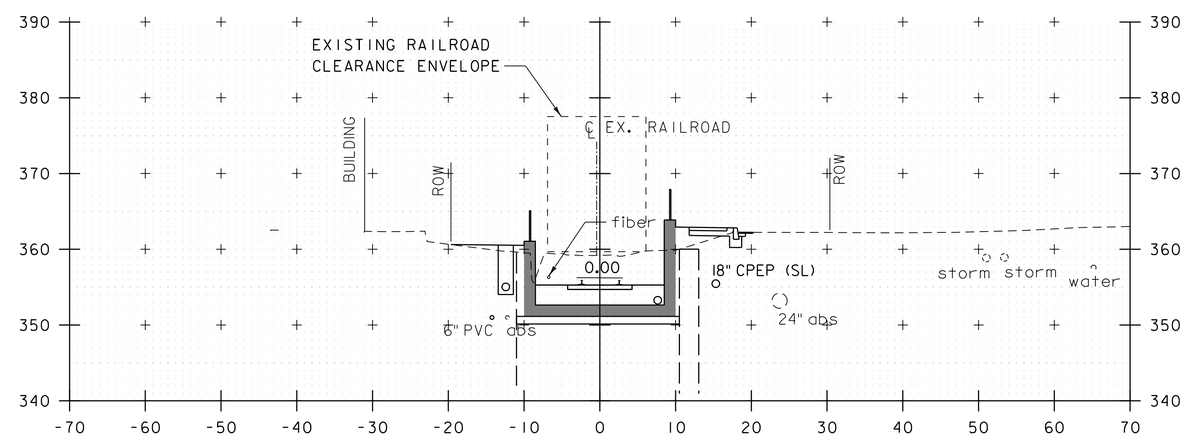

36+50

RAILROAD CROSS SECTIONS

STA. 35+50 - 37+00
SCALE 1" = 10'-0"

PROJECT NAME: MIDDLEBURY	
PROJECT NUMBER: WCRS(23)	
FILE NAME: z13g542xs_rail.dgn	PLOT DATE: 4/30/2019
PROJECT LEADER: A.P. GUYETTE	DRAWN BY: D.M. PECK
DESIGNED BY: M.F. SUFFEL	CHECKED BY: M.F. SUFFEL
RAILROAD CROSS SECTIONS (13 OF 16)	SHEET 263 OF 328

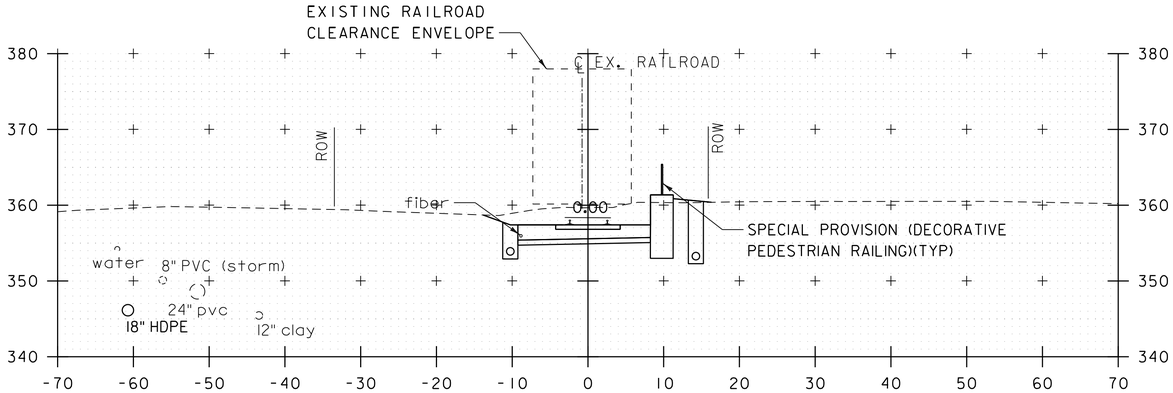

38+50

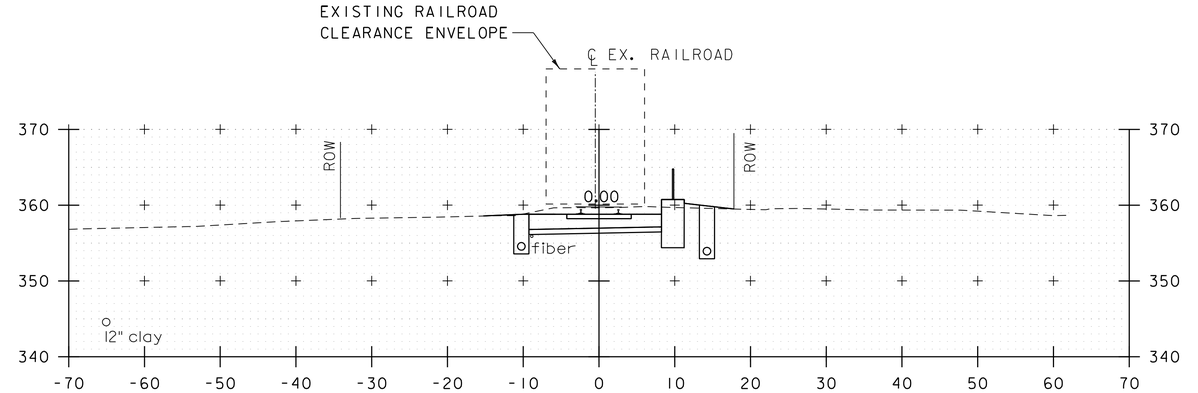

END SPECIAL PROVISION (CONCRETE RETAINING WALL)
SPECIAL PROVISION (DECORATIVE PEDESTRIAN RAILING)
STA. 40+00, RT

40+00

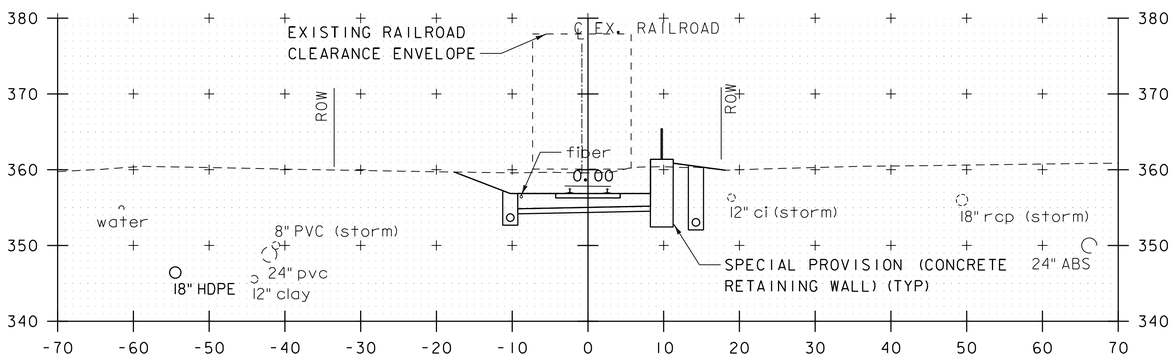

38+00

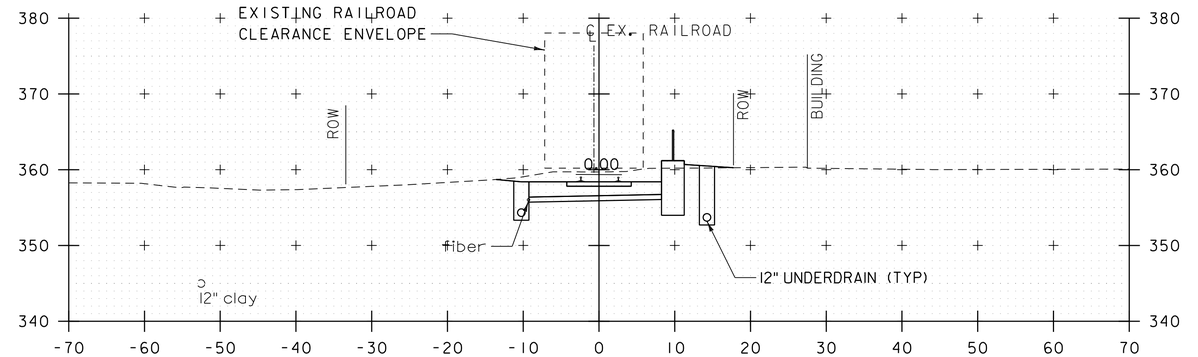

39+50

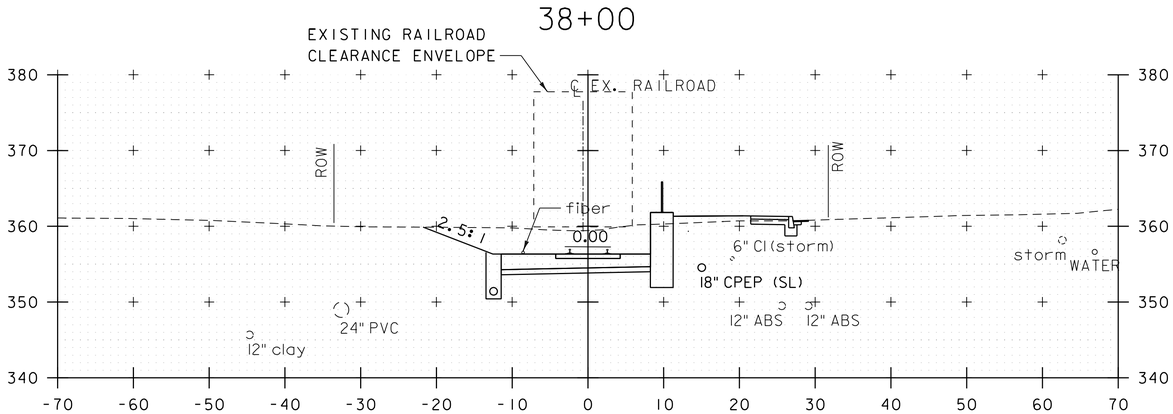

END SPECIAL PROVISION (DECORATIVE
PEDESTRIAN HANDRAILING)
STA. 37+34, LT

37+50

END PRECAST CONCRETE STRUCTURE (U-WALL)
STA 37+33.77

BEGIN SPECIAL PROVISION (CONCRETE
RETAINING WALL)
STA. 34+34, RT

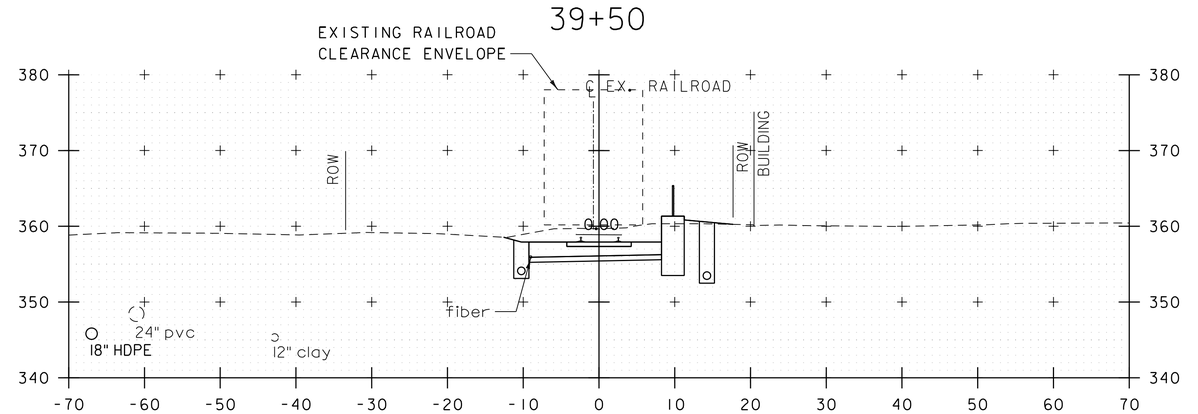

39+00

RAILROAD CROSS SECTIONS

STA. 37+50 - 40+00
SCALE 1" = 10'-0"

PROJECT NAME:	MIDDLEBURY
PROJECT NUMBER:	WCRS(23)

FILE NAME: z13g542xs_rail.dgn	PLOT DATE: 4/30/2019
PROJECT LEADER: A.P. GUYETTE	DRAWN BY: D.M. PECK
DESIGNED BY: M.F. SUFFEL	CHECKED BY: M.F. SUFFEL
RAILROAD CROSS SECTIONS (14 OF 16)	SHEET 264 OF 328

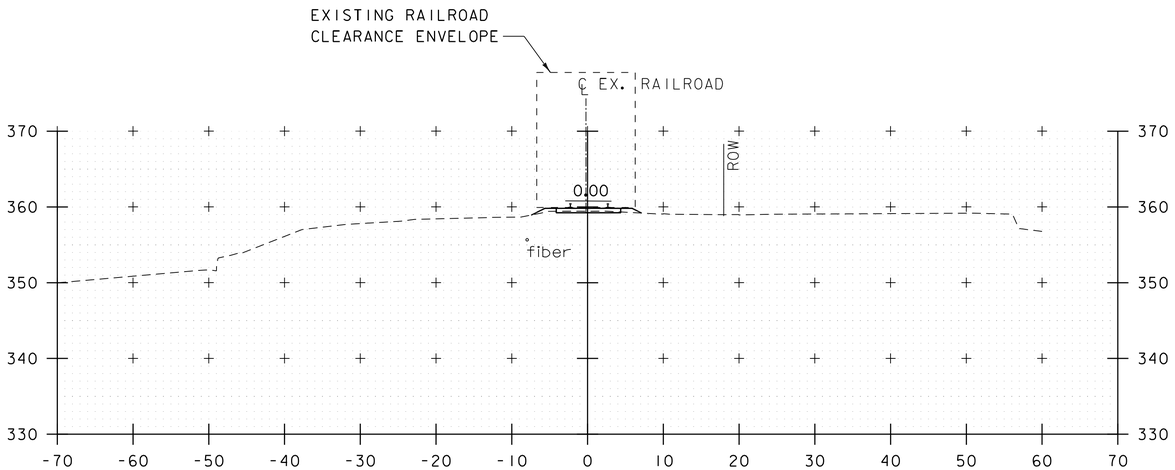

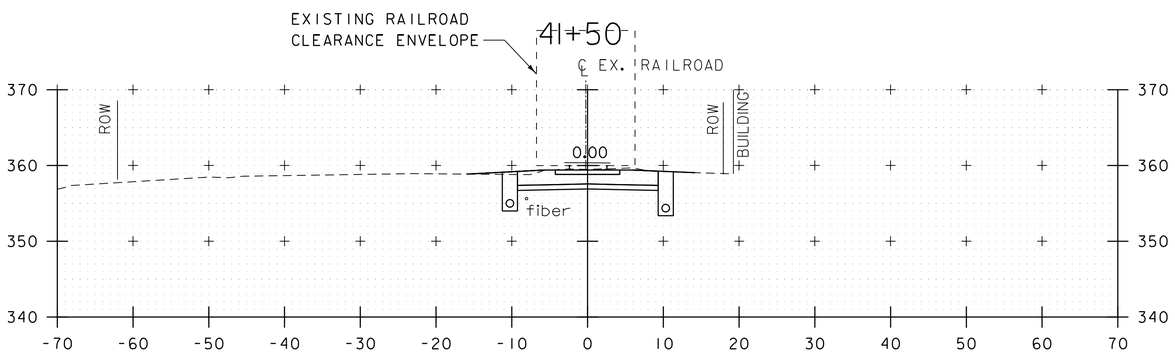

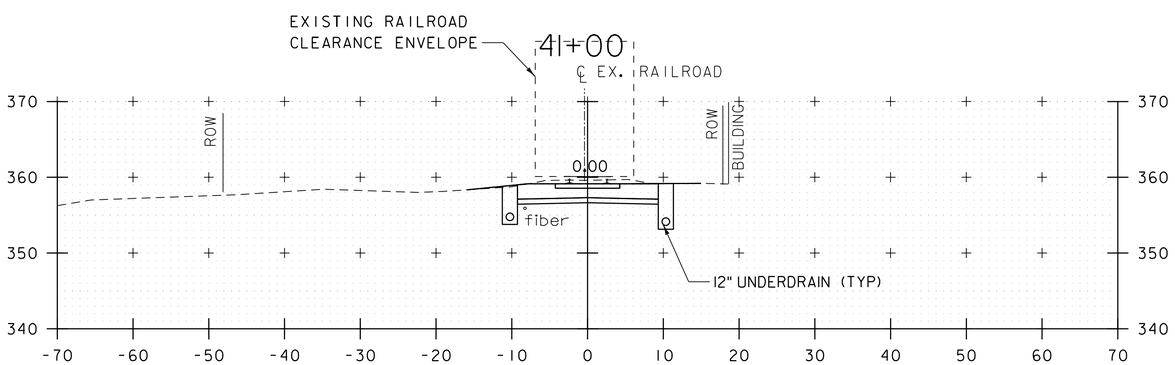

40+50

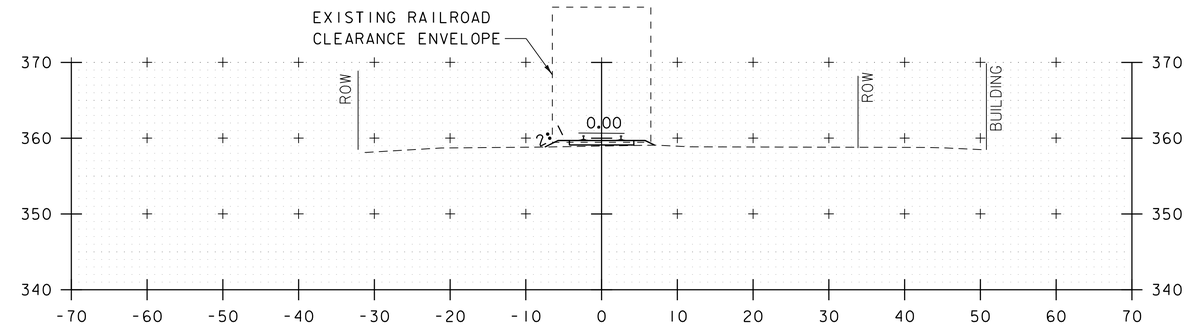

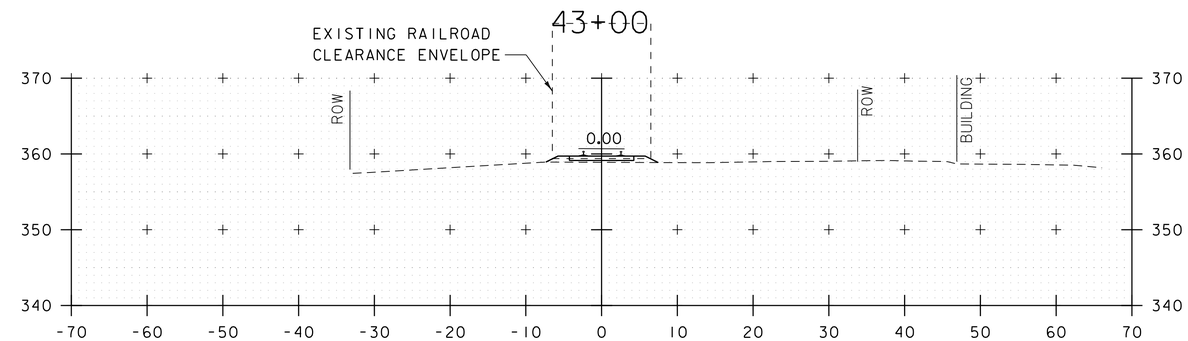

42+50

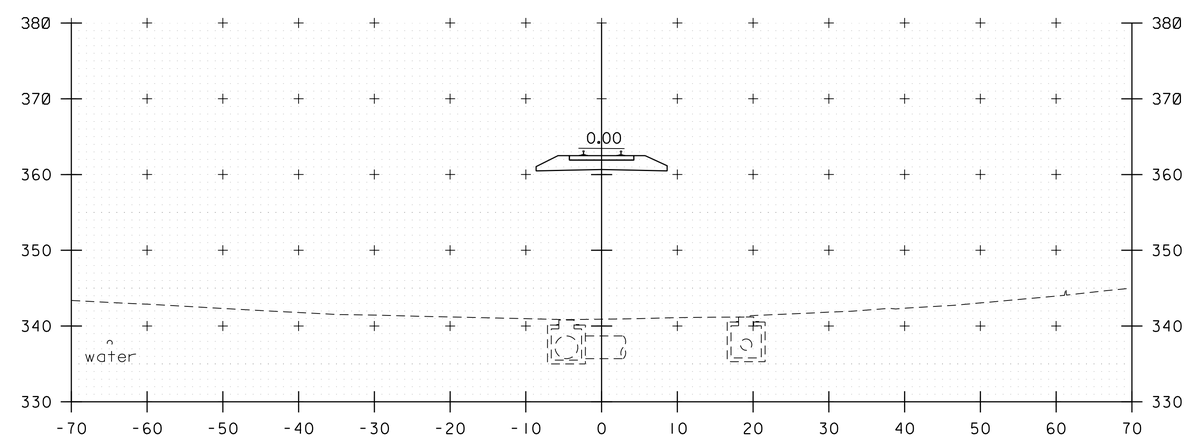

NOTE: BRIDGE NOT SHOWN

42+00

RAILROAD CROSS SECTIONS

STA. 40+50 - 43+00
SCALE 1" = 10'-0"

PROJECT NAME: MIDDLEBURY	
PROJECT NUMBER: WCRS(23)	
FILE NAME: zl3g542xs_rail.dgn	PLOT DATE: 4/30/2019
PROJECT LEADER: A.P. GUYETTE	DRAWN BY: D.M. PECK
DESIGNED BY: M.F. SUFFEL	CHECKED BY: M.F. SUFFEL
RAILROAD CROSS SECTIONS (15 OF 16)	SHEET 265 OF 328

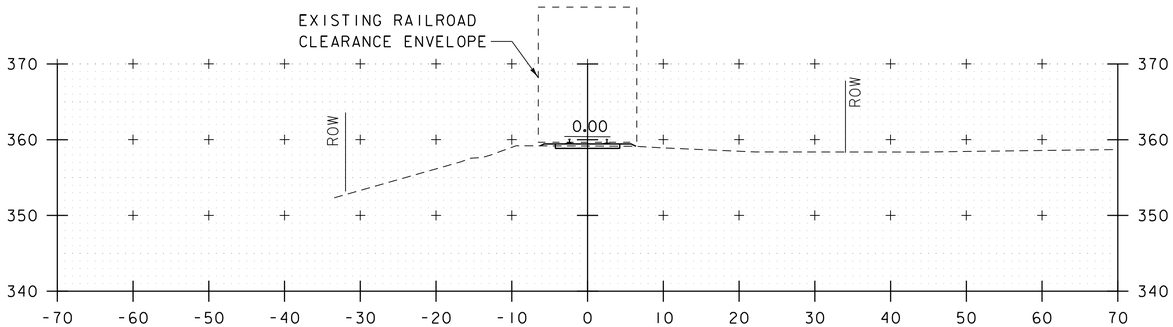

43+50

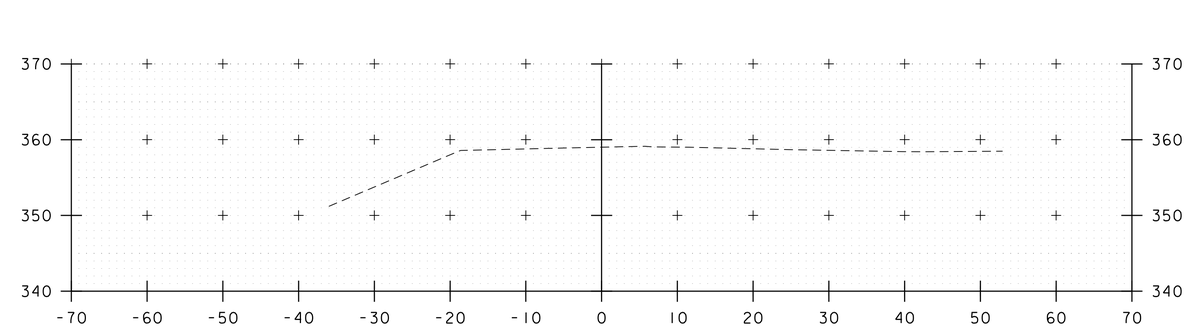

44+00

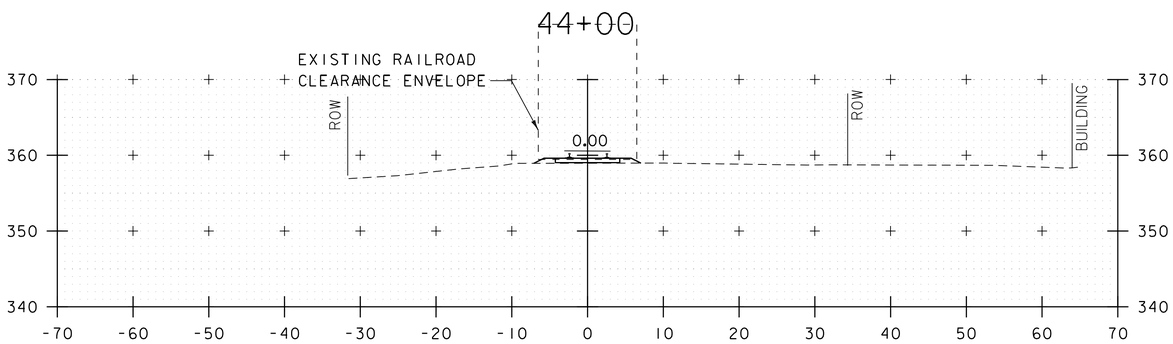

44+50

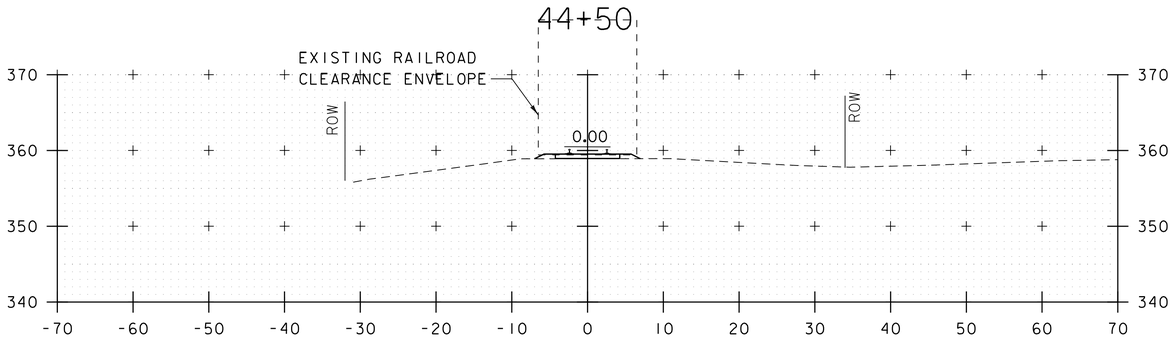

45+00

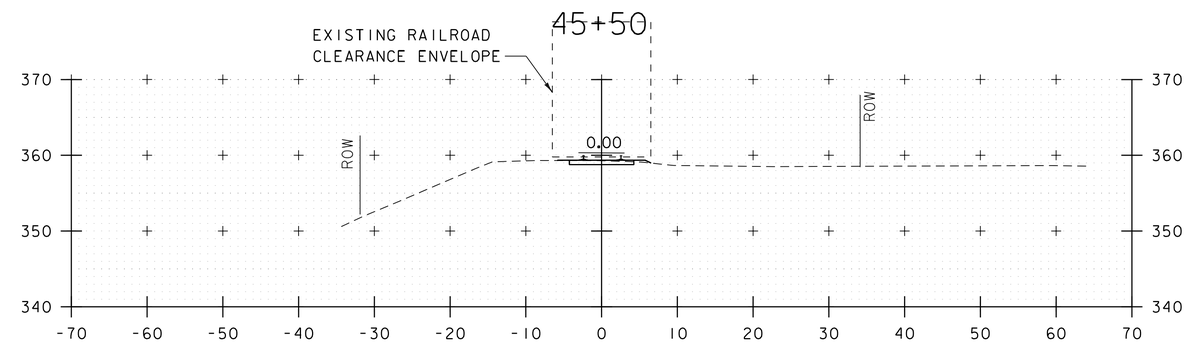

46+00

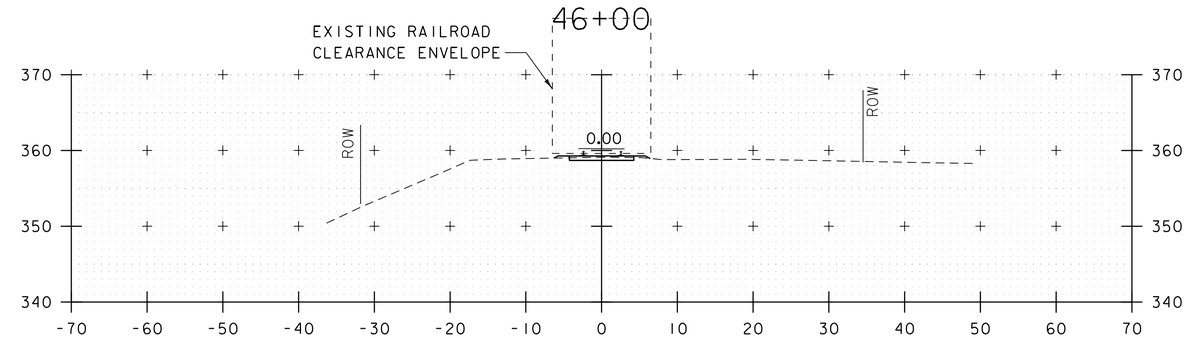

RAILROAD CROSS SECTIONS

STA. 43+50 - 46+00
SCALE 1" = 10'-0"

PROJECT NAME: MIDDLEBURY	
PROJECT NUMBER: WCRS(23)	
FILE NAME: zl3g542xs_rail.dgn	PLOT DATE: 4/30/2019
PROJECT LEADER: A.P. GUYETTE	DRAWN BY: D.M. PECK
DESIGNED BY: M.F. SUFFEL	CHECKED BY: M.F. SUFFEL
RAILROAD CROSS SECTIONS (16 OF 16)	SHEET 266 OF 328

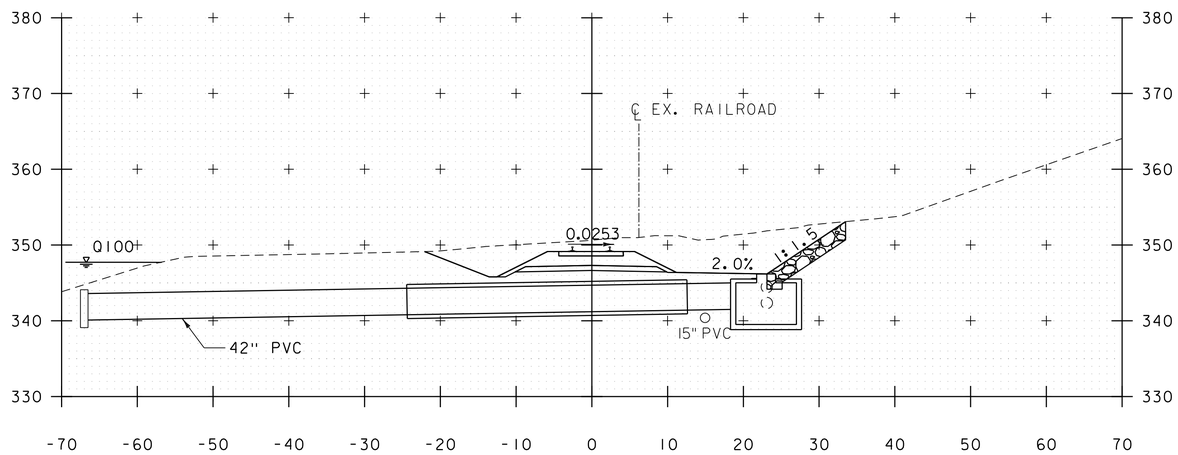

15+24

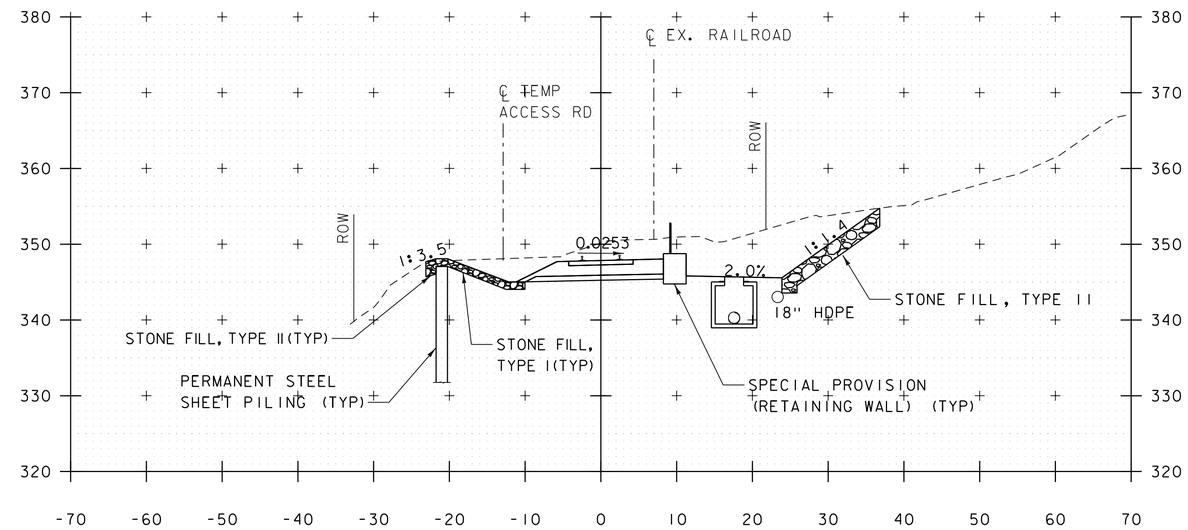

16+59

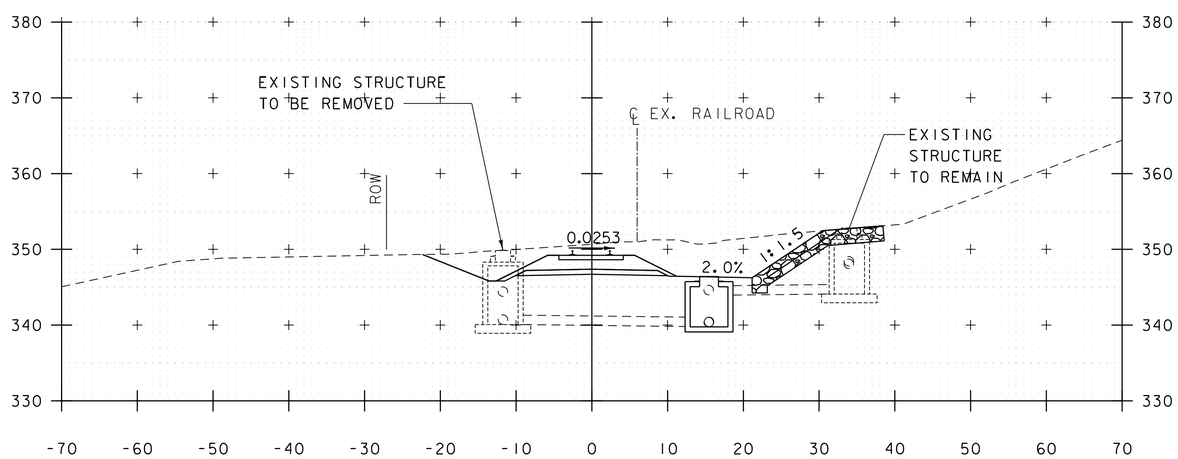

15+18

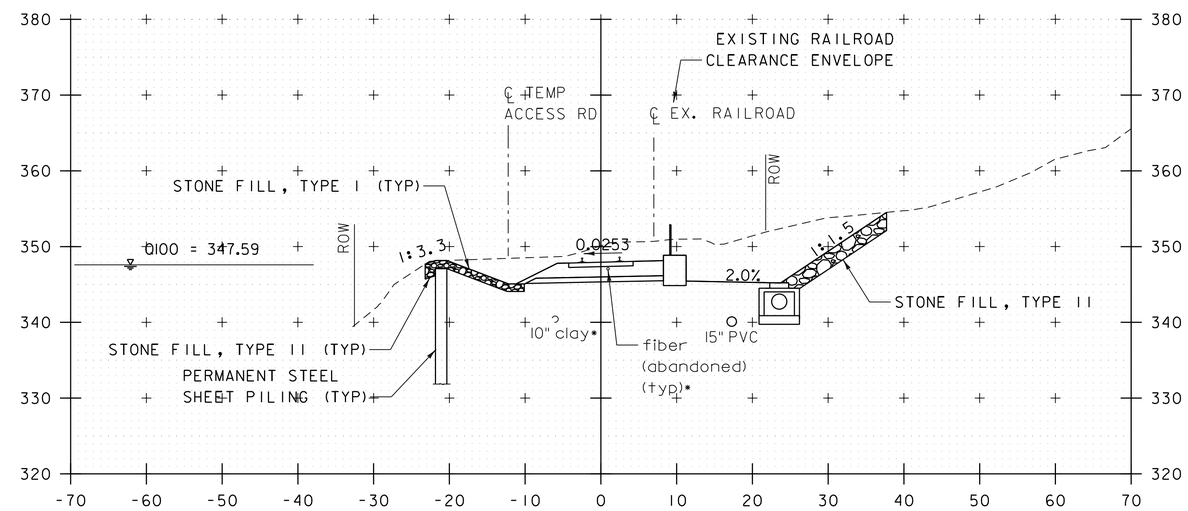

16+50

DRAINAGE CROSS SECTIONS

STA. 14+89 - 16+50
SCALE 1" = 10'-0"

NOTES:

1. GRUBBING MATERIAL NOT SHOWN FOR CLARITY.

PROJECT NAME: MIDDLEBURY	
PROJECT NUMBER: WCRS(23)	
FILE NAME: zl3g542xs_rail.dgn	PLOT DATE: 4/30/2019
PROJECT LEADER: A.P. GUYETTE	DRAWN BY: K.C. BARRY
DESIGNED BY: J.M. DUFFY	CHECKED BY: R.E. MARVIN
DRAINAGE CROSS SECTIONS (1 OF 4)	SHEET 267 OF 328

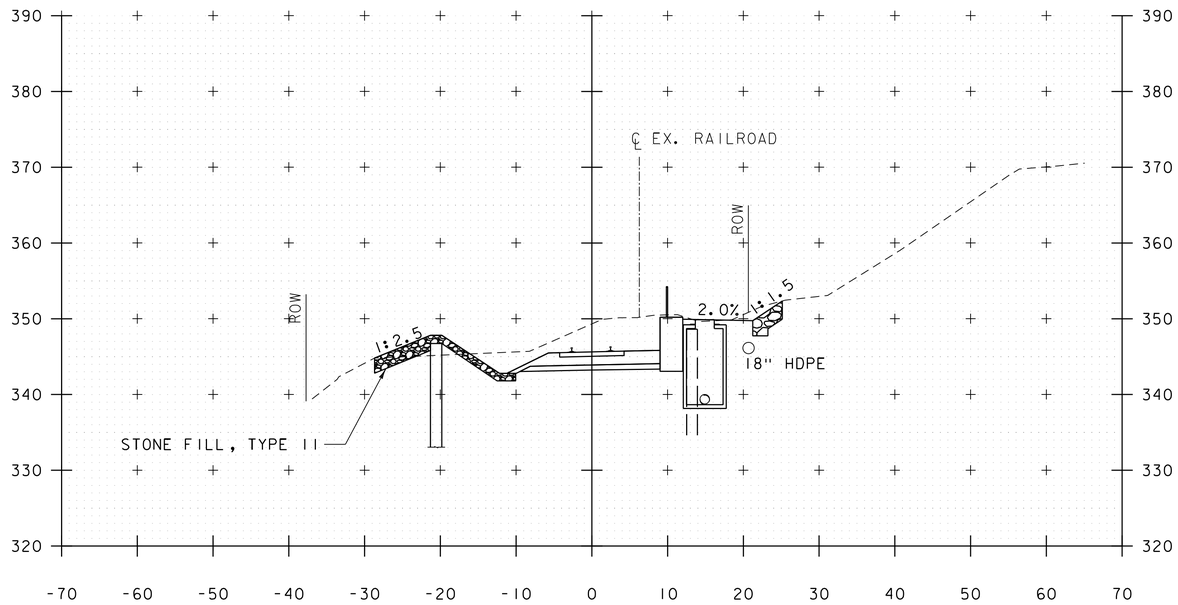

18+69

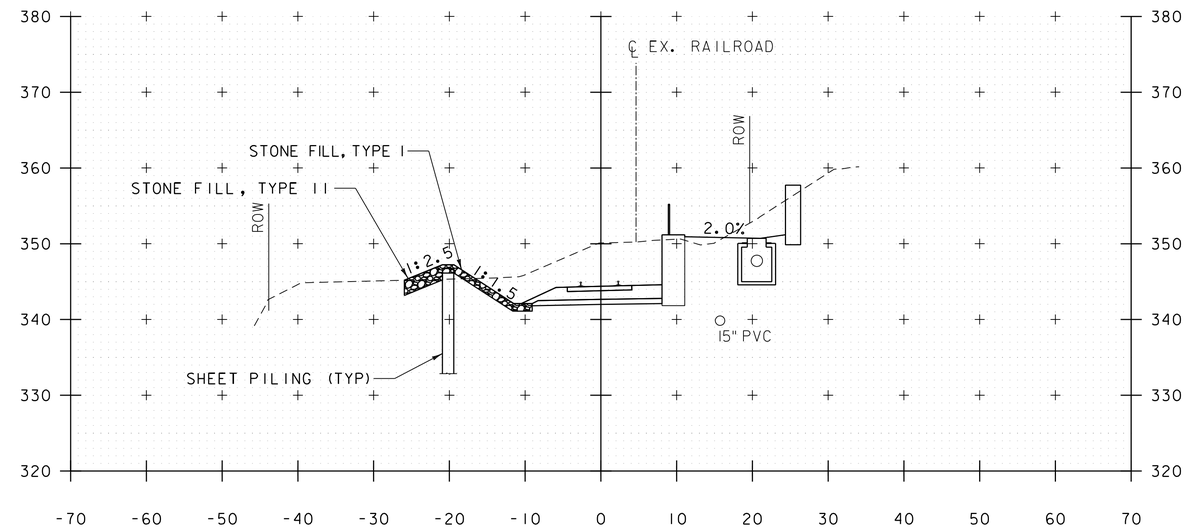

19+90

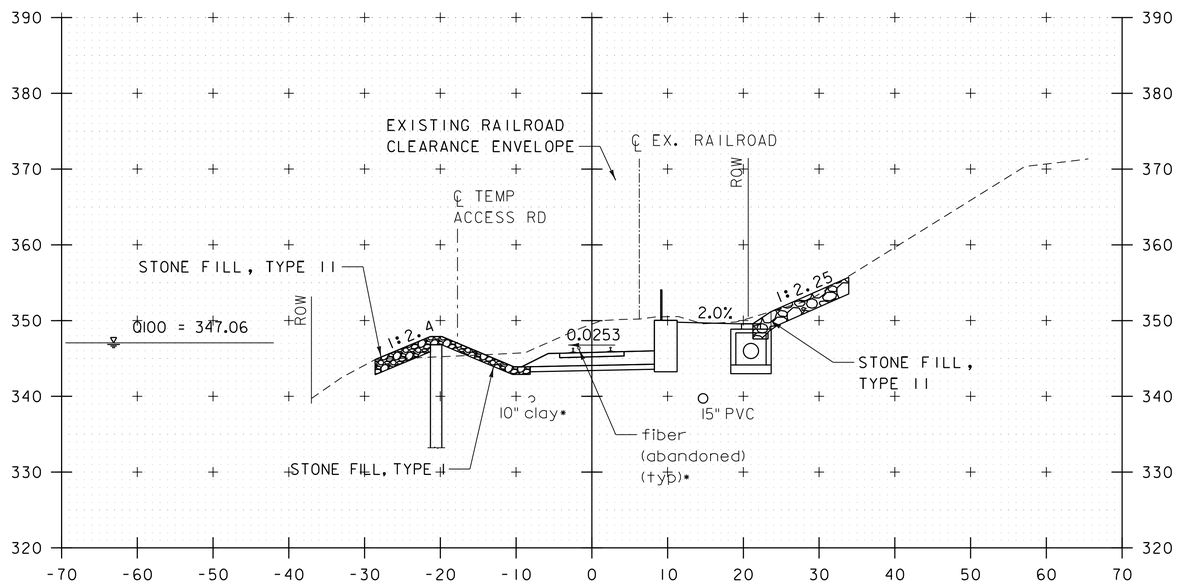

18+50

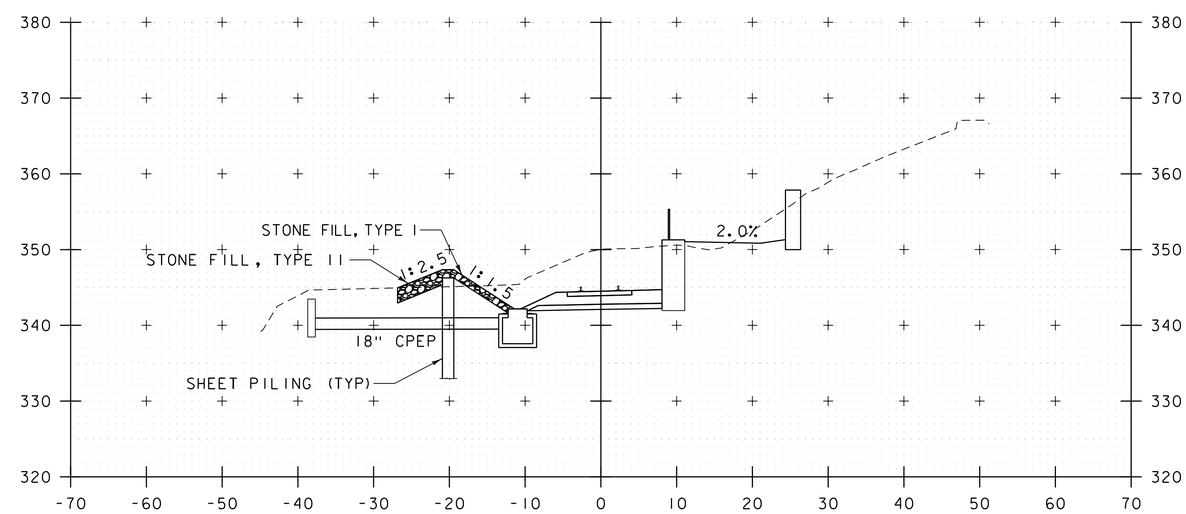

19+75

DRAINAGE CROSS SECTIONS

STA. 16+59 - 19+90
SCALE 1" = 10'-0"

PROJECT NAME: MIDDLEBURY	
PROJECT NUMBER: WCRS(23)	
FILE NAME: zl3g542xs_rail.dgn	PLOT DATE: 4/30/2019
PROJECT LEADER: A.P. GUYETTE	DRAWN BY: K.C. BARRY
DESIGNED BY: J.M. DUFFY	CHECKED BY: R.E. MARVIN
DRAINAGE CROSS SECTIONS (2 OF 4)	SHEET 268 OF 328

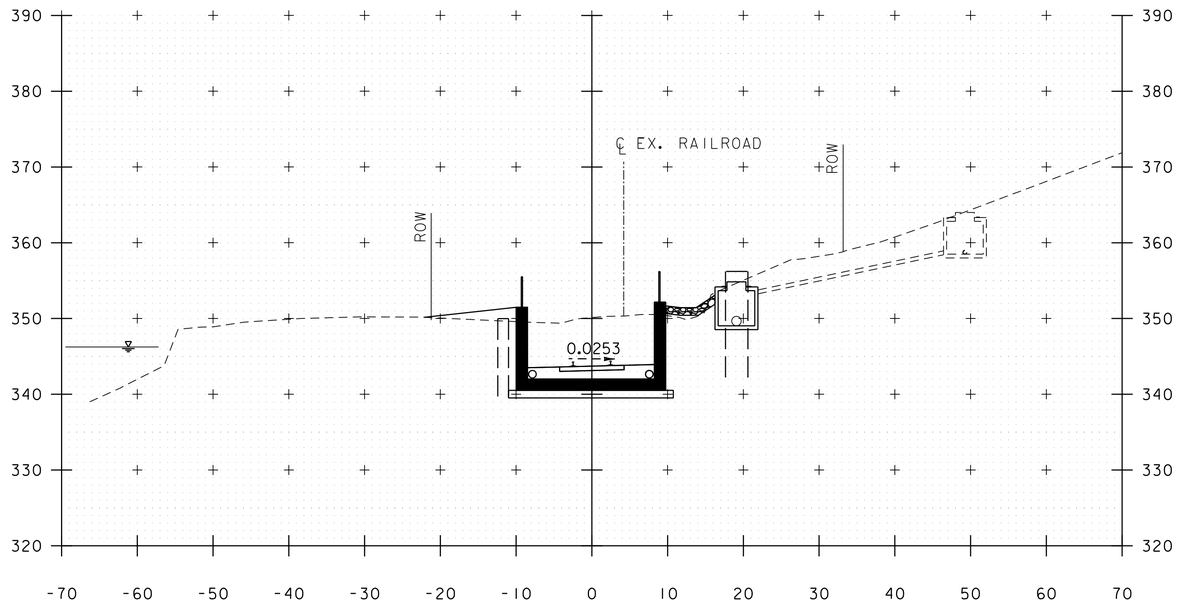

20+87

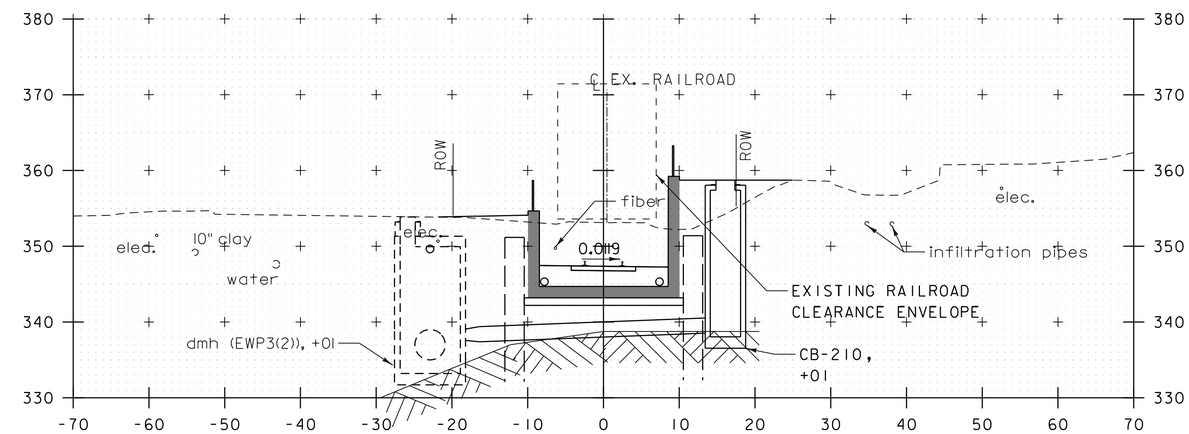

29+00

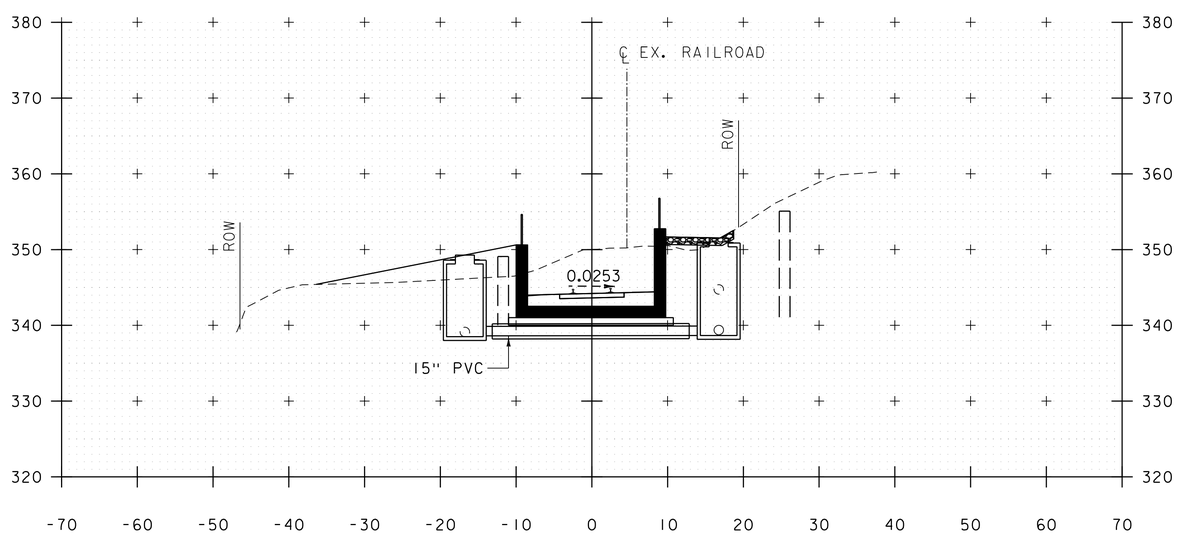

20+10

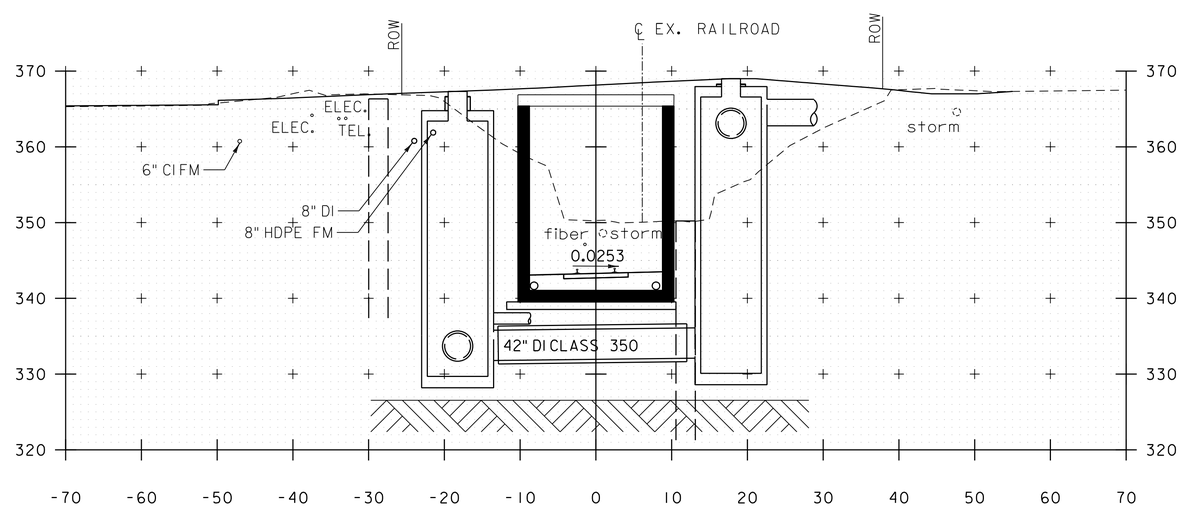

24+51

DRAINAGE CROSS SECTIONS

STA. 20+10 - 29+25
SCALE 1" = 10'-0"

PROJECT NAME: MIDDLEBURY	
PROJECT NUMBER: WCRS(23)	
FILE NAME: zl3g542xs_rail.dgn	PLOT DATE: 4/30/2019
PROJECT LEADER: A.P. GUYETTE	DRAWN BY: K.C. BARRY
DESIGNED BY: J.M. DUFFY	CHECKED BY: R.E. MARVIN
DRAINAGE CROSS SECTION (3 OF 4)	SHEET 269 OF 328

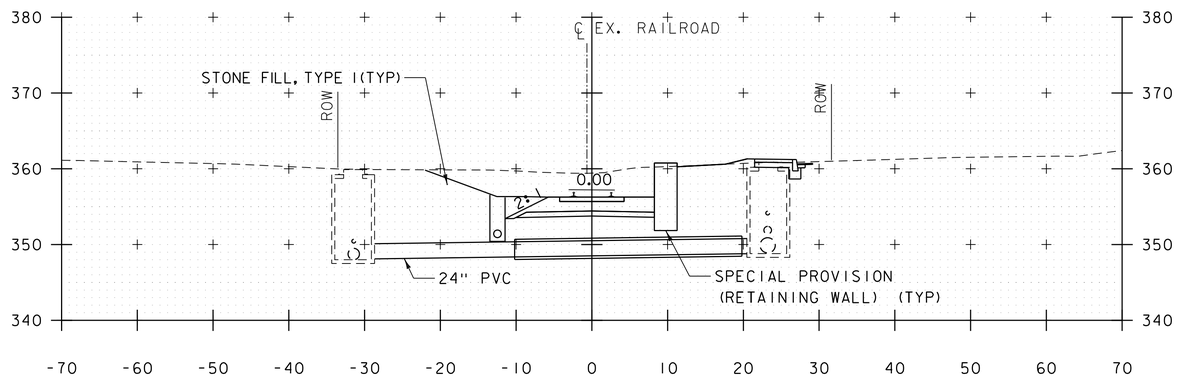

37+43

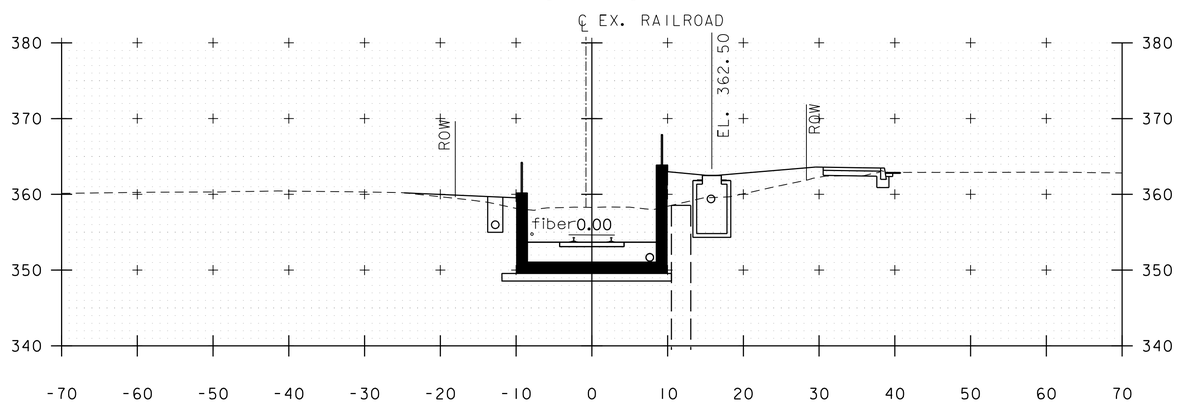

35+00

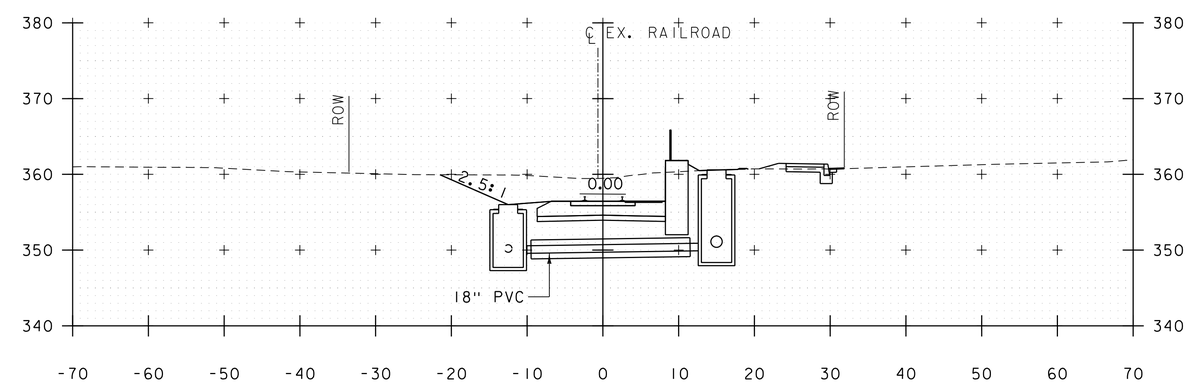

37+60

DRAINAGE CROSS SECTIONS

STA. 30+19 - 37+60
SCALE 1" = 10'-0"

PROJECT NAME: MIDDLEBURY	
PROJECT NUMBER: WCRS(23)	
FILE NAME: z13g542xs_rail.dgn	PLOT DATE: 4/30/2019
PROJECT LEADER: A.P. GUYETTE	DRAWN BY: K.C. BARRY
DESIGNED BY: J.M. DUFFY	CHECKED BY: R.E. MARVIN
DRAINAGE CROSS SECTION (4 OF 4)	SHEET 270 OF 328

LANDSCAPE ARCHITECTURAL SYMBOLS

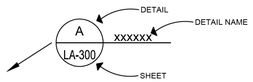

DETAIL BUBBLE

SECTION SYMBOL

EXTERIOR ELEVATION

NORTH ARROW

BUILDING ELEVATION NOTATION

+ 1530.00

SPOT ELEVATION

DIMENSION
NOTE: ALL DIMENSIONS ARE TO OR FROM STRUCTRUAL GRID LINES OR FACE OF FINISH MATERIAL, U.O.N.

PLANTING NOTES

1. ALL ROUGH GRADING IS REQUIRED TO BE APPROVED BY THE LANDSCAPE ARCHITECT PRIOR TO EXCAVATING PLANT PITS AND BEDS.

2. THE CONTRACTOR SHALL STAKE ALL PLANT LOCATIONS IN THE FIELD. PLANT LOCATIONS ARE REQUIRED TO BE APPROVED BY THE LANDSCAPE ARCHITECT PRIOR TO EXCAVATION OF PLANTING BEDS.

3. THE CONTRACTOR SHALL PAINT THE OUTLINES FOR PLANT BEDS AND GROUND COVER AREAS IN THE FIELD. THE FINAL LOCATION OF ALL PLANT BEDS AND GROUND COVER ARE REQUIRED TO BE APPROVED BY THE LANDSCAPE ARCHITECT PRIOR TO EXCAVATION.

4. CONTRACTOR SHALL BE RESPONSIBLE FOR REPLACEMENT OF ANY EXISTING HARDSCAPE OR SOFTSCAPE MATERIALS DAMAGED DURING PLANTING OPERATIONS.

5. AREAS SHOWN AS GROUNDCOVER AT THE BASE OF TREES AND SHRUBS MUST CONFORM TO THE FOLLOWING CRITERIA. THERE SHALL BE NO GROUND COVER INSTALLED AT THE BASE OF TREES OR SHRUBS AS FOLLOWS:
   a. 4 FOOT RADIUS AROUND EVERGREENS.
   b. 3 FOOT RADIUS AROUND DECIDUOUS TREES.
   c. 2 FOOT RADIUS AROUND LARGE SHRUBS.

12. ALL SHRUBS AND GROUNDCOVER SHALL BE PLANTED USING A TRIANGULATED METHOD, UNLESS OTHERWISE NOTED. REFER TO PLANT MATERIAL INSTALLATION DETAILS.

GRADING NOTES

1. REFER TO CROSS SECTIONS FOR GENERAL SITE GRADING FOR THE PROJECT..

2. REFER TO LANDSCAPE GRADING PLANS FOR MICRO GRADING THROUGHOUT THE LANDSCAPED AREAS. MICRO GRADING SHOWS PROPOSED ELEVATIONS OF HARDSCAPE SURFACES, I.E. SITE WALLS, TERRACES, AND WALKS, UNLESS OTHERWISE NOTED.

LAYOUT NOTES

1. LANDSCAPE DRAWINGS SHALL NOT BE SCALED. DIMENSIONS MISSING FROM PLANS OR NEEDED FOR EXECUTION OF THE WORK SHALL BE CLARIFIED OR PROVIDED BY THE RESIDENT ENGINEER BEFORE THE WORK IS INSTALLED.
   a. ALL DIMENSIONS ARE TO FACE OF FINISH MATERIAL, UNLESS OTHERWISE NOTED.
   b. TAKE ALL DIMENSIONS PERPENDICULAR TO ANY REFERENCE LINE, WORK LINE, CENTERLINE, OR FACE OF BUILDING/STRUCTURE.
   c. ALL DIMENSIONS CALLED OUT AS "EQUAL" ARE CONSIDERED EQUIDISTANT MEASUREMENTS.

2. REFERENCE TO SCALE IS FOR FULL SIZED DRAWINGS, NOT REDUCED PLANS. DO NOT SCALE FROM DRAWINGS.

3. THE CONTRACTOR SHALL MAKE CERTAIN THAT THE WORK OF THE NEW CONSTRUCTION WILL NOT OBSTRUCT FIRE DEPARTMENT ACCESS TO NEARBY BUILDINGS. EXITS SHALL BE MAINTAINED CLEAR OF ALL OBSTRUCTIONS.

4. EXISTING STONE BENCHES TO BE SALVAGED, PROTECTED AND REINSTALLED PER LANDSCAPING PLANS. THIS WORK WILL NOT BE PAID FOR DIRECTLY BUT WILL BE INCIDENTAL TO ALL OTHER LANDSCAPING ITEMS.

LANDSCAPE DRAWING ABBREVIATIONS

@	AT	HP	HIGH POINT
AD	AREA DRAIN	HT	HEIGHT
AL	ALIGN	I.D.	INSIDE DIAMETER
ALT	ALTERNATE	LP	LOW POINT
ASPH	ASPHALT	MAX	MAXIMUM
BC	BOTTOM OF CURB	MFR	MANUFACTURER
BLDG	BUILDING	MIN	MINIMUM
BS	BOTTOM OF STEP	NIC	NOT IN CONTRACT
BW	BOTTOM OF WALL	O.C.	ON CENTER
CB	CATCH BASIN	O.D.	OUTSIDE DIAMETER
CJ	CONTROL JOINT	QTY	QUANTITY
CL	CENTERLINE	R	RADIUS
CONC	CONCRETE	REINF	REINFORCED
CONST	CONSTRUCTION	REQ	REQUIRED
CONT	CONTINUOUS	SPECS	SPECIFICATIONS
CTR	CENTER	SS	STAINLESS STEEL
DIA	DIAMETER	STD	STANDARD
DIM	DIMENSION	TD	TRENCH DRAIN
DWG	DRAWING	TC	TOP OF CURB
EA	EACH	TS	TOP OF STEP
EJ	EXPANSION JOINT	TW	TOP OF WALL
ELEV	ELEVATION	TYP	TYPICAL
EOP	EDGE OF PAVEMENT	U.O.N.	UNLESS OTHERWISE NOTED
EQ	EQUAL	VIF	VERIFY IN FIELD
EW	EACH WAY	W/	WITH
FC	FLUSH CURB	W/O	WITHOUT
FF	FINISH FLOOR	WWF	WELDED WIRE FABRIC

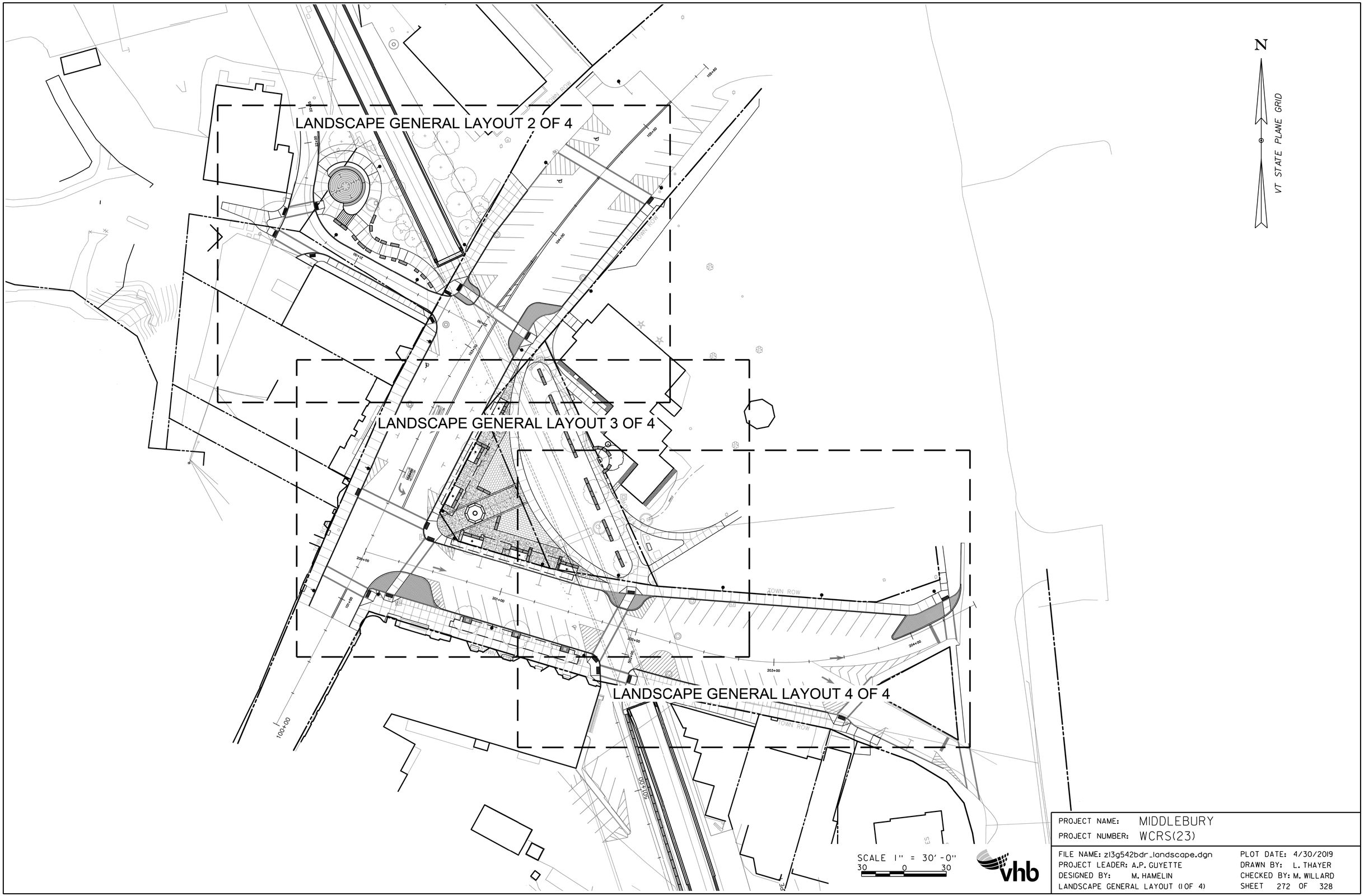

PROJECT NAME:	MIDDLEBURY
PROJECT NUMBER:	WCRS(23)

FILE NAME: zl3g542bdr_landscape.dgn	PLOT DATE: 4/30/2019
PROJECT LEADER: A.P. GUYETTE	DRAWN BY: L. THAYER
DESIGNED BY: M. HAMELIN	CHECKED BY: M. WILLARD
LANDSCAPE GENERAL LAYOUT (1 OF 4)	SHEET 272 OF 328

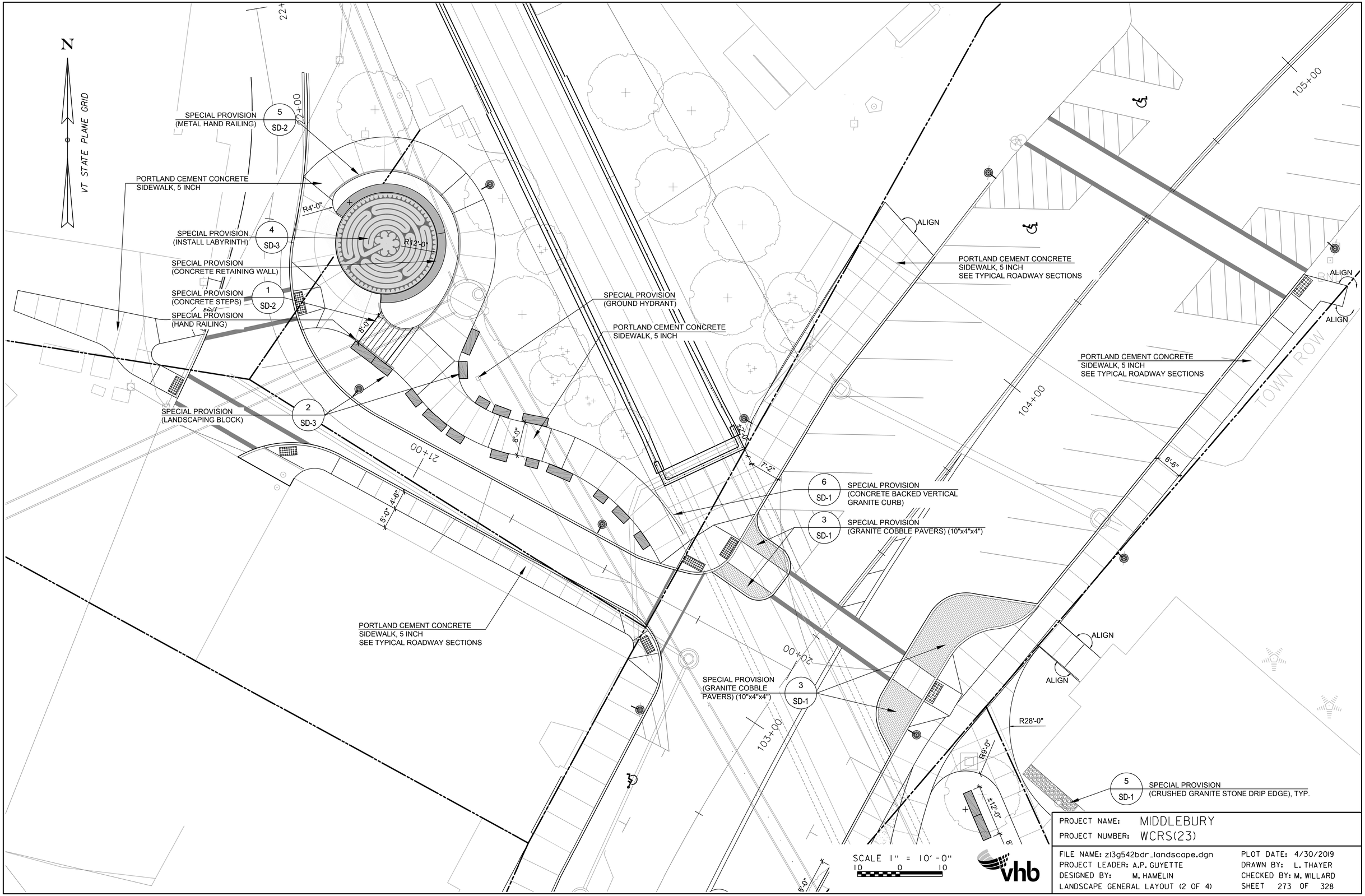

PROJECT NAME: MIDDLEBURY
PROJECT NUMBER: WCRS(23)

FILE NAME: zl3g542bdr_landscape.dgn
PROJECT LEADER: A.P. GUYETTE
DESIGNED BY: M. HAMELIN
LANDSCAPE GENERAL LAYOUT (2 OF 4)

PLOT DATE: 4/30/2019
DRAWN BY: L. THAYER
CHECKED BY: M. WILLARD
SHEET 273 OF 328

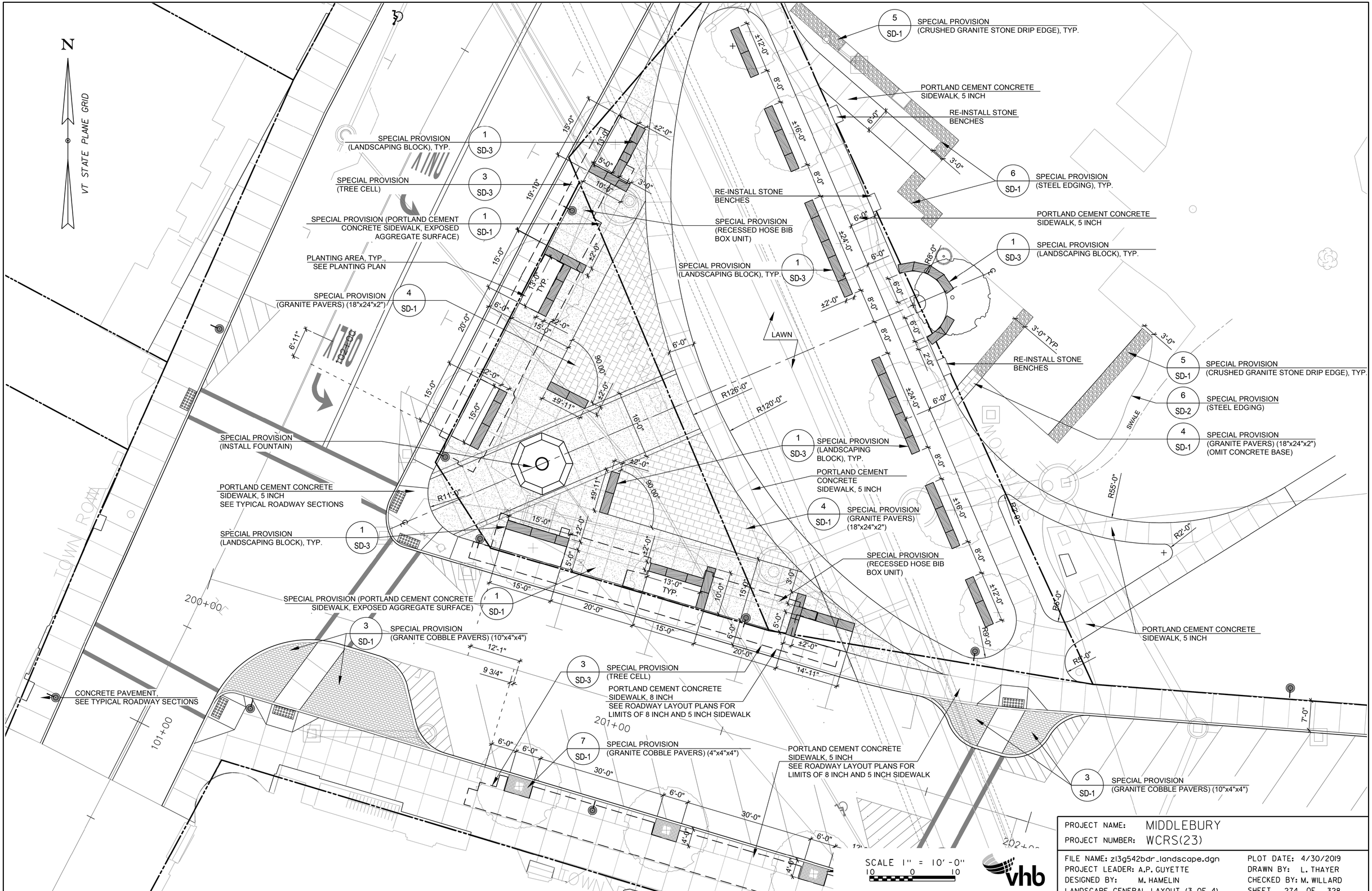

PROJECT NAME: MIDDLEBURY	
PROJECT NUMBER: WCRS(23)	
FILE NAME: zl3g542bdr_landscape.dgn	PLOT DATE: 4/30/2019
PROJECT LEADER: A.P. GUYETTE	DRAWN BY: L. THAYER
DESIGNED BY: M. HAMELIN	CHECKED BY: M. WILLARD
LANDSCAPE GENERAL LAYOUT (3 OF 4)	SHEET 274 OF 328

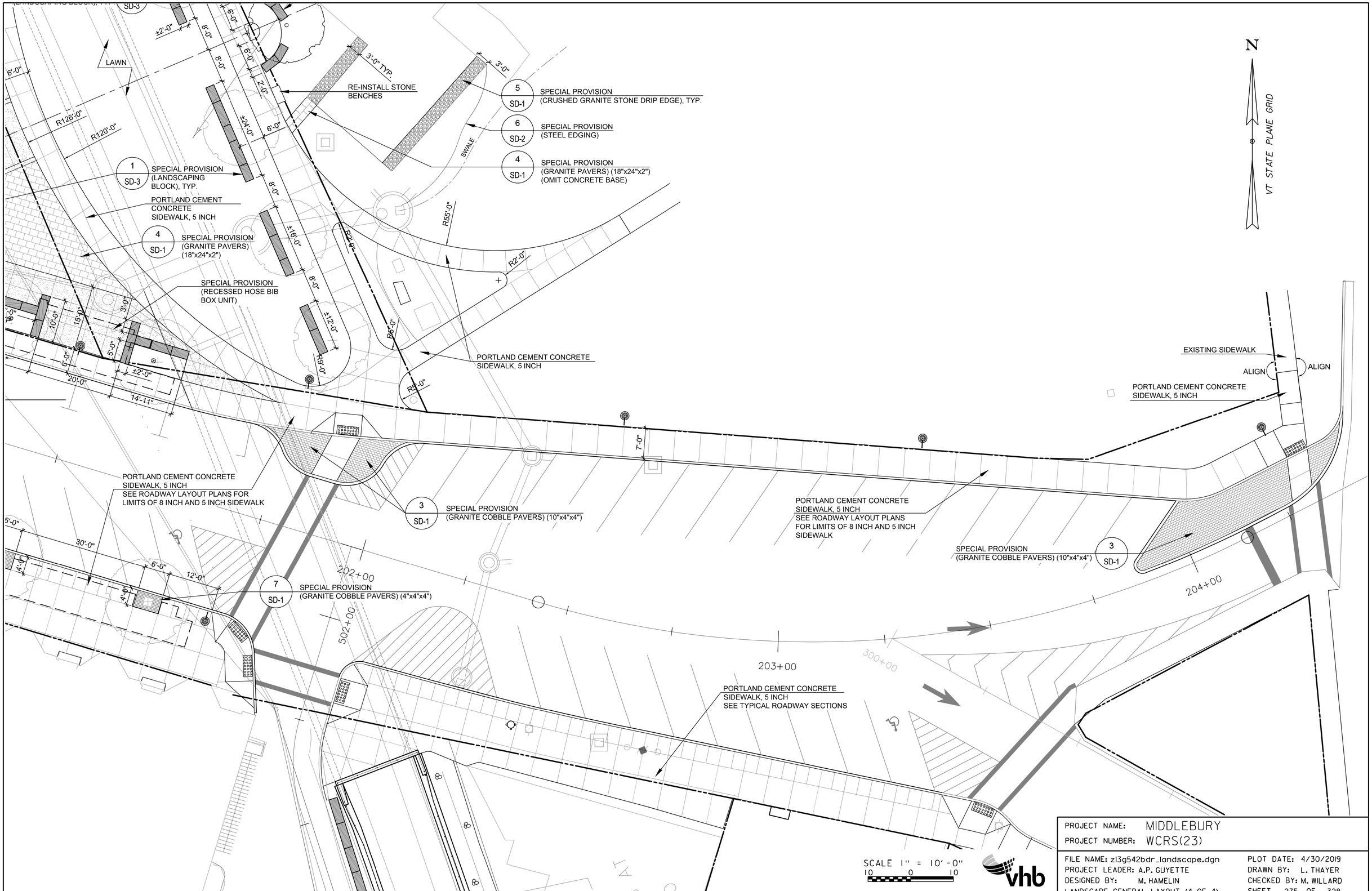

PROJECT NAME: MIDDLEBURY	
PROJECT NUMBER: WCRS(23)	
FILE NAME: zl3g542bdr_landscape.dgn	PLOT DATE: 4/30/2019
PROJECT LEADER: A.P. GUYETTE	DRAWN BY: L. THAYER
DESIGNED BY: M. HAMELIN	CHECKED BY: M. WILLARD
LANDSCAPE GENERAL LAYOUT (4 OF 4)	SHEET 275 OF 328

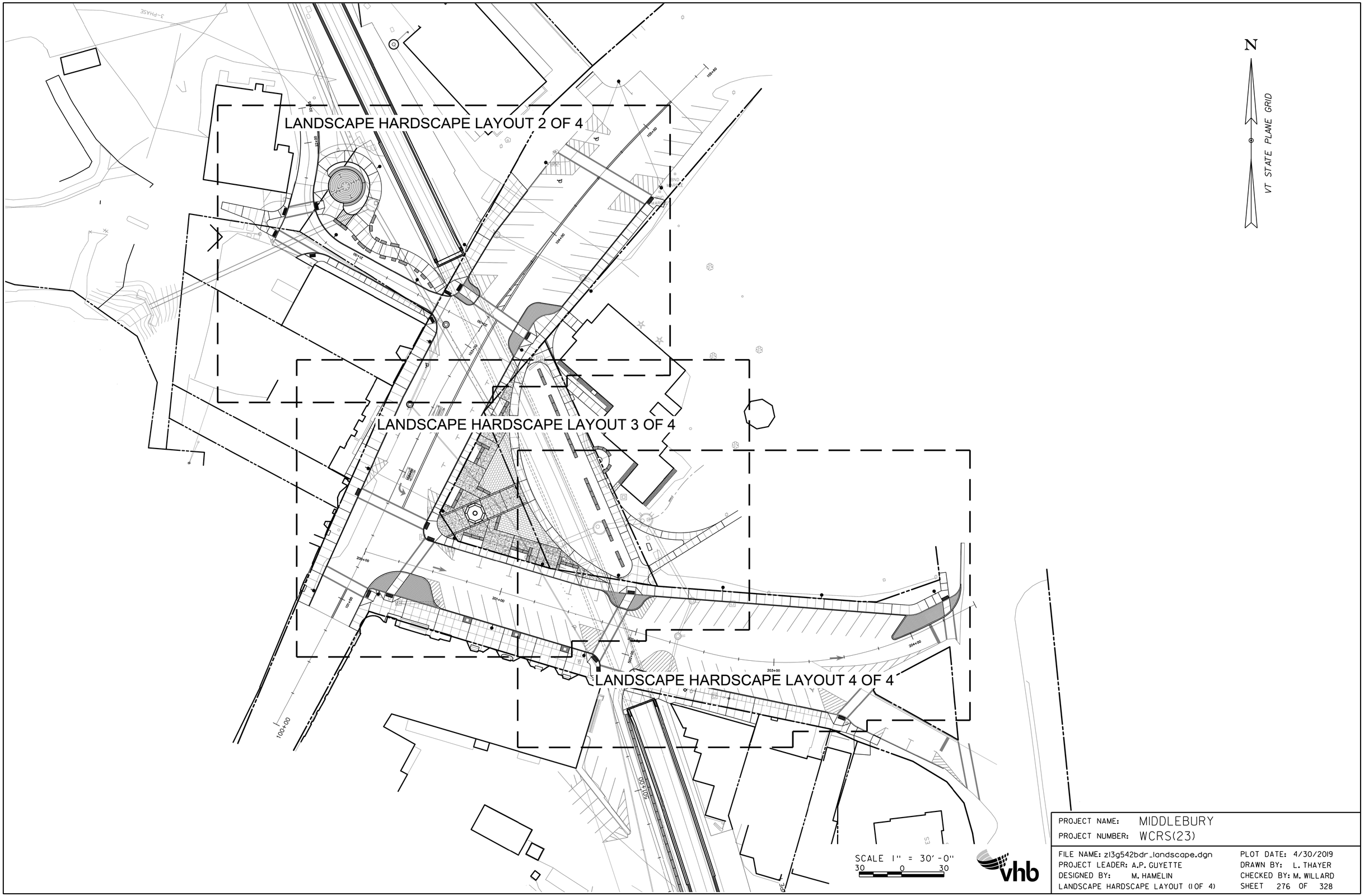

PROJECT NAME: MIDDLEBURY
PROJECT NUMBER: WCRS(23)

FILE NAME: zl3g542bdr_landscape.dgn
PROJECT LEADER: A.P. GUYETTE
DESIGNED BY: M. HAMELIN
LANDSCAPE HARDSCAPE LAYOUT (1 OF 4)

PLOT DATE: 4/30/2019
DRAWN BY: L. THAYER
CHECKED BY: M. WILLARD
SHEET 276 OF 328

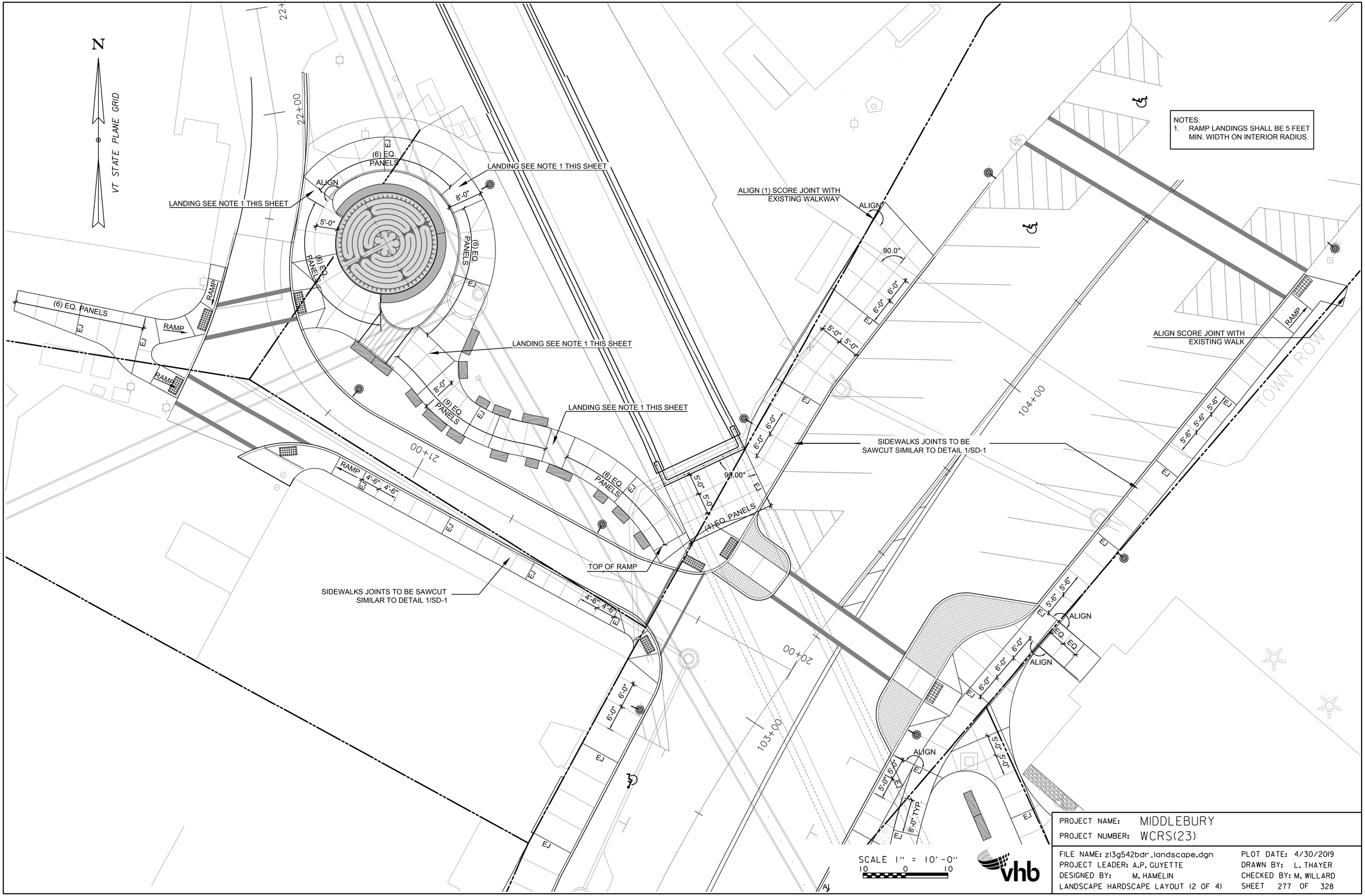

NOTES:
1. RAMP LANDINGS SHALL BE 5 FEET MIN. WIDTH ON INTERIOR RADIUS.

PROJECT NAME: MIDDLEBURY	
PROJECT NUMBER: WCRS(23)	
FILE NAME: z13g542bdr_landscape.dgn	PLOT DATE: 4/30/2019
PROJECT LEADER: A.P. GUYETTE	DRAWN BY: L. THAYER
DESIGNED BY: M. HAMELIN	CHECKED BY: M. WILLARD
LANDSCAPE HARDSCAPE LAYOUT (2 OF 4)	SHEET 277 OF 328

NOTES:
1. ALL CONCRETE JOINTS SHALL BE SAWCUT UNLESS NOTED OTHERWISE.

N
VT STATE PLANE GRID

SIDEWALKS JOINTS TO BE SAWCUT SIMILAR TO DETAIL 1/SD-1

SIDEWALKS JOINTS TO BE SAWCUT SIMILAR TO DETAIL 1/SD-1

SIDEWALKS JOINTS TO BE SAWCUT SIMILAR TO DETAIL 1/SD-1

ALIGN SCORE JOINT WITH EXISTING WALK

ALIGN SCORE JOINT WITH EXISTING WALK

ONLY

ONLY

6 EQ. PANELS

6 EQ. PANELS

3 EQ. PANELS

(3) EQ. PANELS

(8) EQ. PANELS

(2) EQ. PANELS

RAMP

RAMP

SWALE

ALIGN

EJ

EQ.

90.00°

90.0°

8'-0" TYP.

5'-0" TYP.

5'-6"

5'-0"

6'-0"

4'-0"

3'-0"

1'-0"

7'-0"

200+00

202+00

SCALE 1" = 10'-0"
10 0 10

vhb

PROJECT NAME: MIDDLEBURY	
PROJECT NUMBER: WCRS(23)	
FILE NAME: zl3g542bdr_landscape.dgn	PLOT DATE: 4/30/2019
PROJECT LEADER: A.P. GUYETTE	DRAWN BY: L. THAYER
DESIGNED BY: M. HAMELIN	CHECKED BY: M. WILLARD
LANDSCAPE HARDSCAPE LAYOUT (3 OF 4)	SHEET 278 OF 328

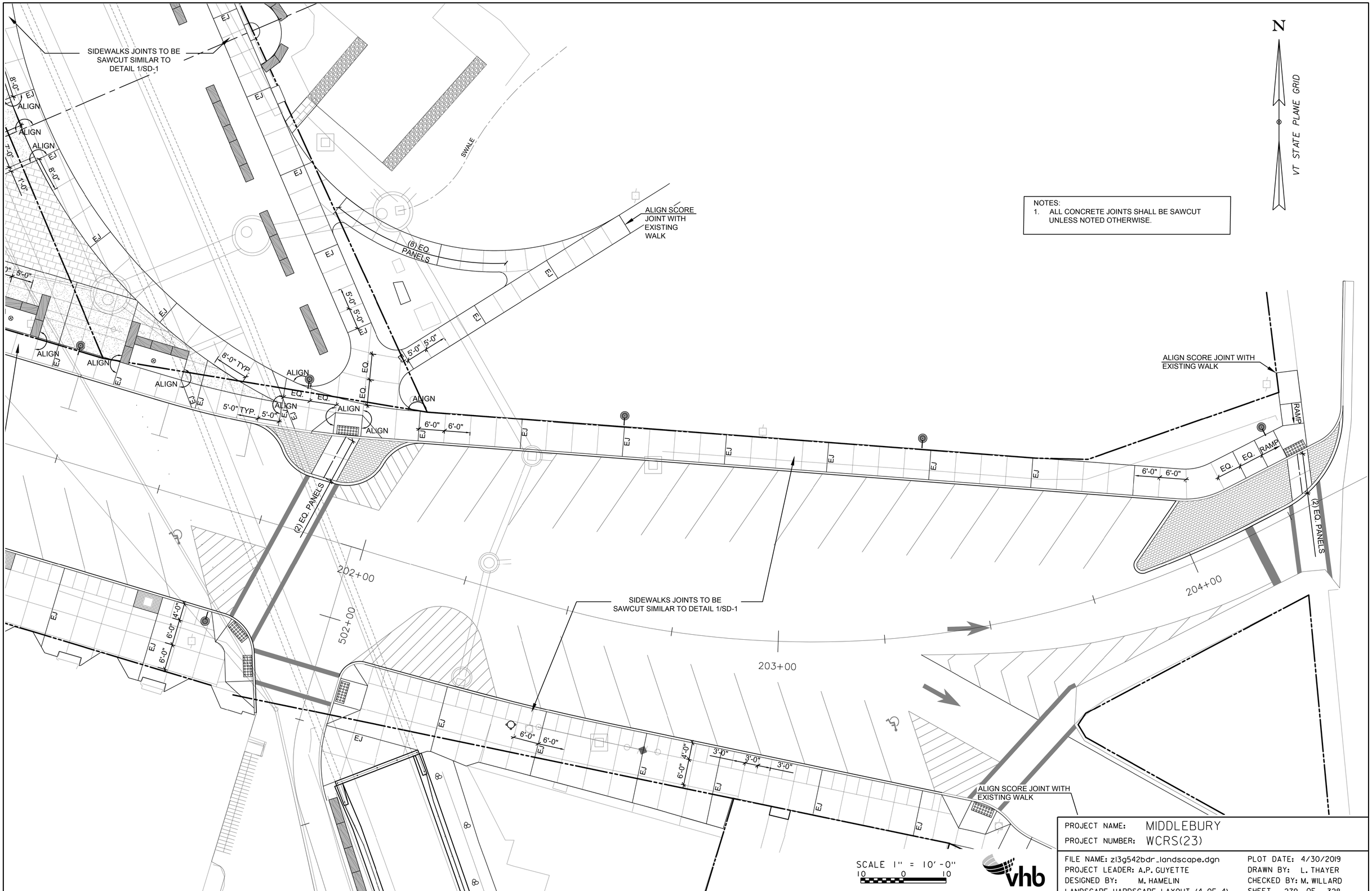

NOTES:
1. ALL CONCRETE JOINTS SHALL BE SAWCUT UNLESS NOTED OTHERWISE.

PROJECT NAME: MIDDLEBURY	
PROJECT NUMBER: WCRS(23)	
FILE NAME: zl3g542bdr_landscape.dgn	PLOT DATE: 4/30/2019
PROJECT LEADER: A.P. GUYETTE	DRAWN BY: L. THAYER
DESIGNED BY: M. HAMELIN	CHECKED BY: M. WILLARD
LANDSCAPE HARDSCAPE LAYOUT (4 OF 4)	SHEET 279 OF 328

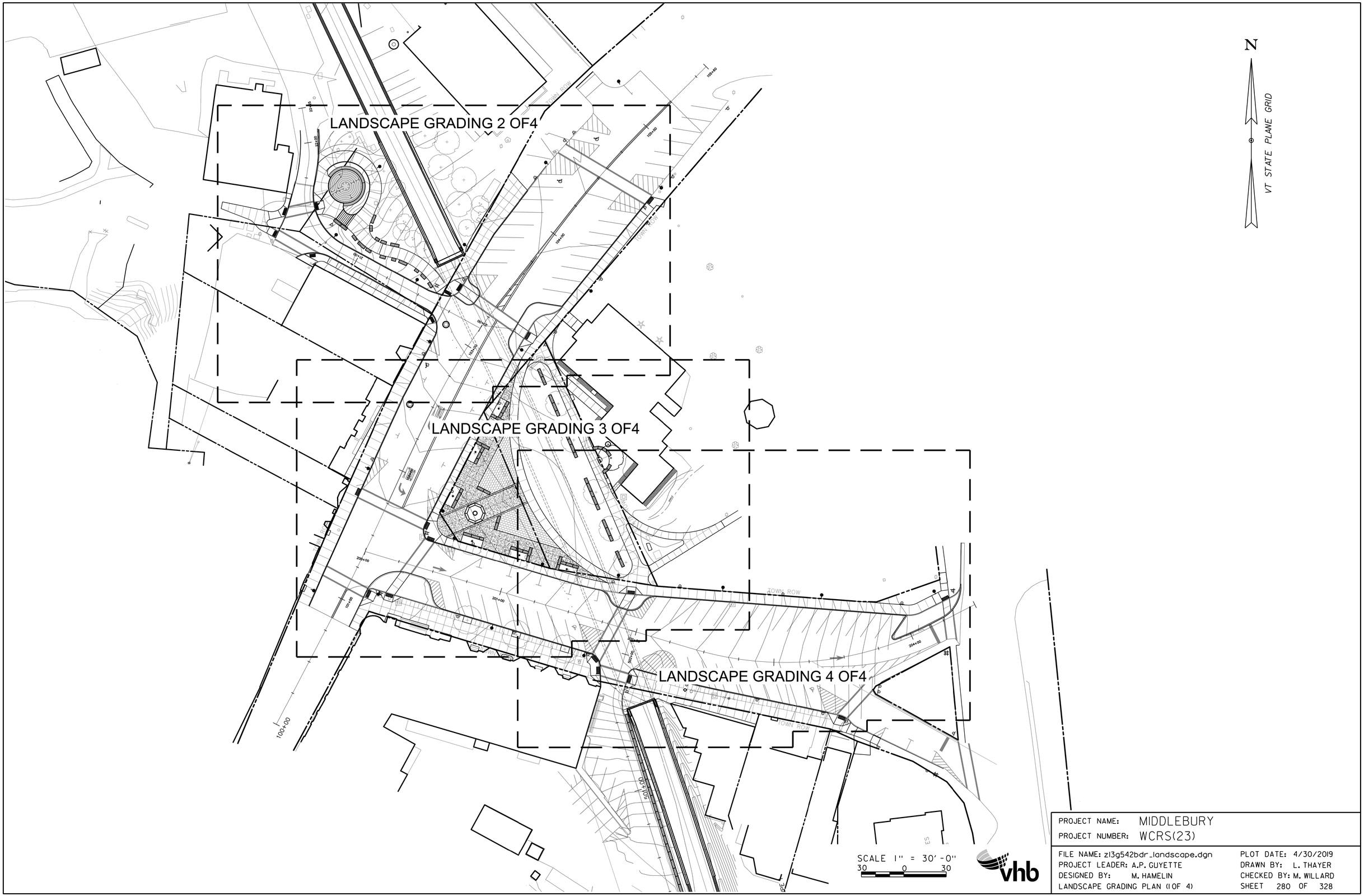

PROJECT NAME: MIDDLEBURY
PROJECT NUMBER: WCRS(23)

FILE NAME: z13g542bdr_landscape.dgn
PROJECT LEADER: A.P. GUYETTE
DESIGNED BY: M. HAMELIN
LANDSCAPE GRADING PLAN (1 OF 4)

PLOT DATE: 4/30/2019
DRAWN BY: L. THAYER
CHECKED BY: M. WILLARD
SHEET 280 OF 328

N

VT STATE PLANE GRID

FFE 357.70

MATCH EXISTING GRADE

MATCH EXISTING GRADE

MATCH EXISTING GRADE

MATCH EXISTING GRADE

FFE 371.72

2.0% MIN.

10% MAX.

22+00

21+00

20+00

103+00

104+00

105+00

TOWN ROW

LEGEND

	MAJOR CONTOURS
	MINOR CONTOURS
	SWALE
(430.50) +	EXIST. SPOT GRADE
430.50 +	SPOT GRADE
TS +	TOP OF STEP
BS +	BOTTOM OF STEP
TW +	TOP OF WALL
BW +	BOTTOM OF WALL
TC +	TOP OF CURB
BC +	BOTTOM OF CURB
FC +	FLUSH CURB
TR +	TOP OF RAMP
BR +	BOTTOM OF RAMP
HP +	HIGH POINT
LP +	LOW POINT
CB +	CATCH BASIN
AD +	AREA DRAIN
TD +	TRENCH DRAIN
PD +	PLANTER DRAIN
SPD +	SUB SURFACE PLANTER DRAIN

SCALE 1" = 10'-0"

10 0 10

vhb

PROJECT NAME: MIDDLEBURY

PROJECT NUMBER: WCRS(23)

FILE NAME: zl3g542bdr_landscape.dgn

PROJECT LEADER: A.P. GUYETTE

DESIGNED BY: M. HAMELIN

LANDSCAPE GRADING PLAN (2 OF 4)

PLOT DATE: 4/30/2019

DRAWN BY: L. THAYER

CHECKED BY: M. WILLARD

SHEET 281 OF 328

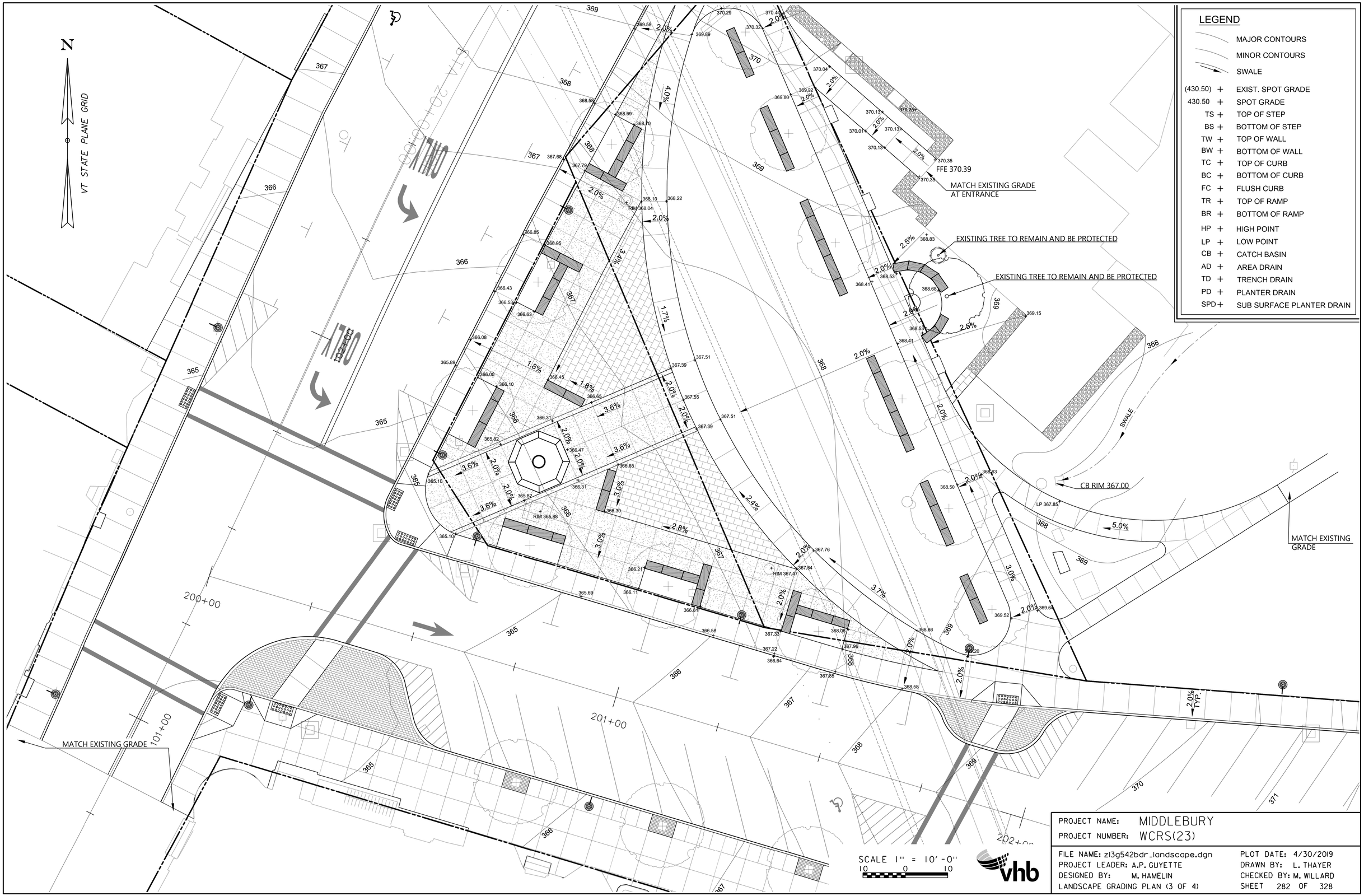

PROJECT NAME: MIDDLEBURY
PROJECT NUMBER: WCRS(23)

FILE NAME: zl3g542bdr_landscape.dgn
PROJECT LEADER: A.P. GUYETTE
DESIGNED BY: M. HAMELIN
LANDSCAPE GRADING PLAN (3 OF 4)

PLOT DATE: 4/30/2019
DRAWN BY: L. THAYER
CHECKED BY: M. WILLARD
SHEET 282 OF 328

EXISTING TREE TO REMAIN AND BE PROTECTED

CB RIM 367.00

MATCH EXISTING GRADE

SWALE

TOWN ROW

202+00

203+00

204+00

300+00

502+00

N

VT STATE PLANE GRID

LEGEND

		MAJOR CONTOURS
		MINOR CONTOURS
		SWALE
(430.50)	+	EXIST. SPOT GRADE
430.50	+	SPOT GRADE
TS	+	TOP OF STEP
BS	+	BOTTOM OF STEP
TW	+	TOP OF WALL
BW	+	BOTTOM OF WALL
TC	+	TOP OF CURB
BC	+	BOTTOM OF CURB
FC	+	FLUSH CURB
TR	+	TOP OF RAMP
BR	+	BOTTOM OF RAMP
HP	+	HIGH POINT
LP	+	LOW POINT
CB	+	CATCH BASIN
AD	+	AREA DRAIN
TD	+	TRENCH DRAIN
PD	+	PLANTER DRAIN
SPD	+	SUB SURFACE PLANTER DRAIN

SCALE 1" = 10'-0"

10 0 10

vhb

PROJECT NAME: MIDDLEBURY

PROJECT NUMBER: WCRS(23)

FILE NAME: zl3g542bdr_landscape.dgn

PROJECT LEADER: A.P. GUYETTE

DESIGNED BY: M. HAMELIN

LANDSCAPE GRADING PLAN (4 OF 4)

PLOT DATE: 4/30/2019

DRAWN BY: L. THAYER

CHECKED BY: M. WILLARD

SHEET 283 OF 328

NOTE:
1. INSTALL STONE PER LAYOUT PROVIDED IN THE LAYOUT & MATERIAL PLANS

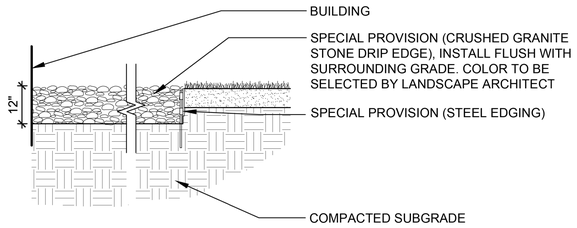

5 SPECIAL PROVISION (CRUSHED GRANITE STONE DRIP EDGE)

SCALE 1/2" = 1'-0"

NOTES:
1.GRANITE PAVERS TO BE SET IN A RUNNING BOND PATTERN.
2. REFER TO LANDSCAPE HARDSCAPE LAYOUT PLANS FOR LAYOUT INFORMATION.
3. INSTALL PAVERS WITH HAND TIGHT BUTT JOINTS.
4. SAND SWEEP PAVER JOINTS WITH POLYMER SAND, COLOR TO MATCH STONE PAVERS.

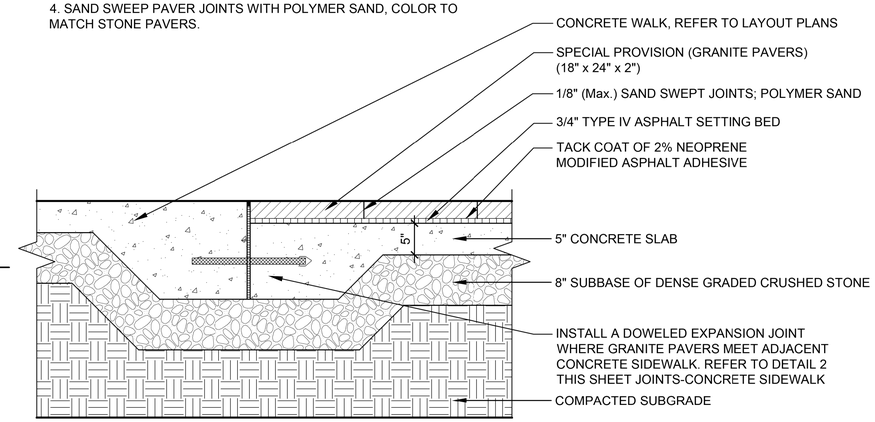

4 SPECIAL PROVISION) (GRANITE PAVERS) (18"X24"X2")

SCALE 1" = 1'-0"

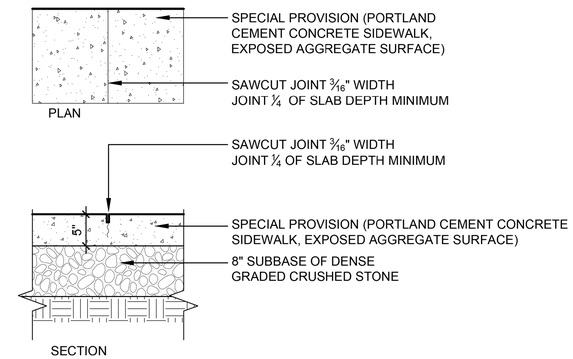

1 SPECIAL PROVISION (PORTLAND CEMENT CONCRETE SIDEWALK, EXPOSED AGGREGATE SURFACE)

SCALE 1" = 1'-0"

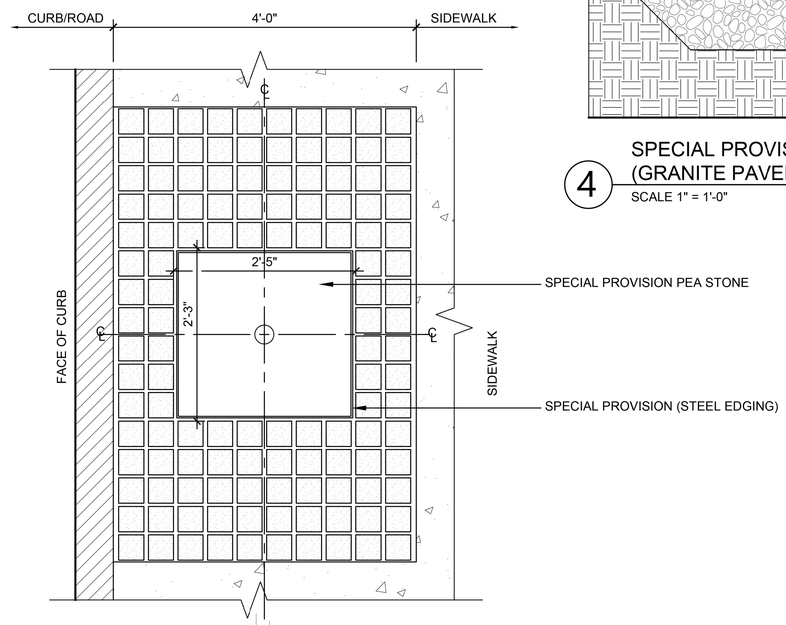

PLAN

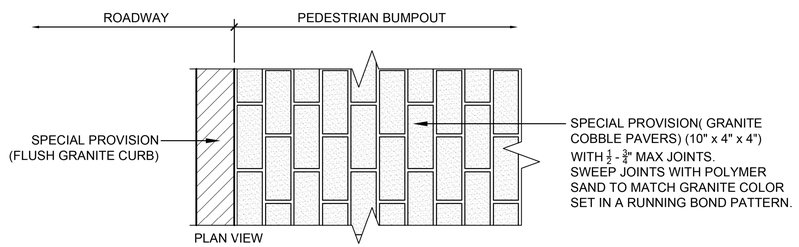

NOTES:
1. SET COBBLES IN A RUNNING BOND PATTERN.
2. REFER TO PAVING PLANS FOR PATTERN ORIENTATION.

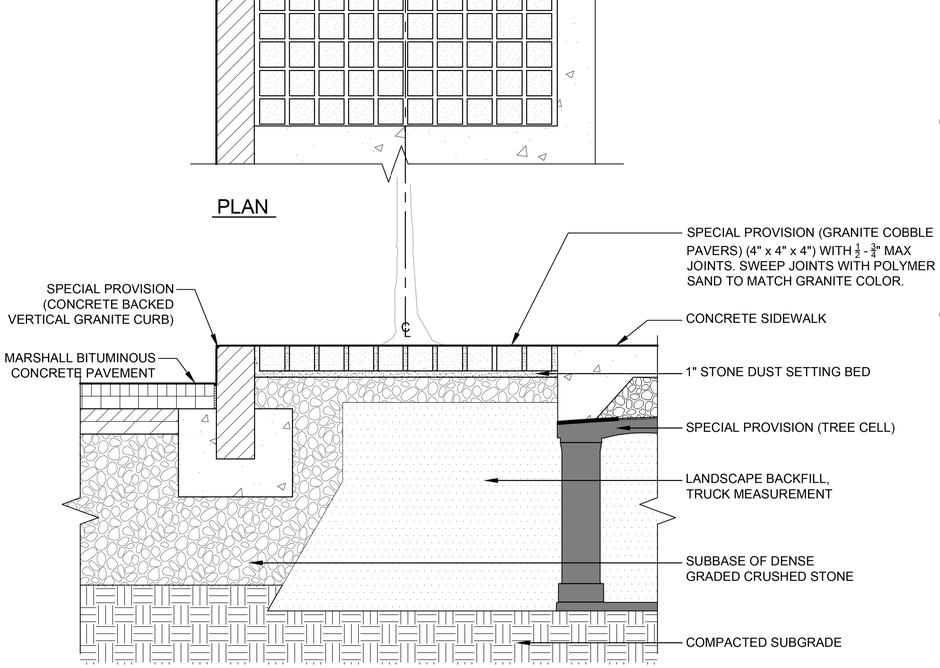

7 SPECIAL PROVISION (GRANITE COBBLE PAVERS) (4"X4"X4")

SCALE 1" = 1'-0"

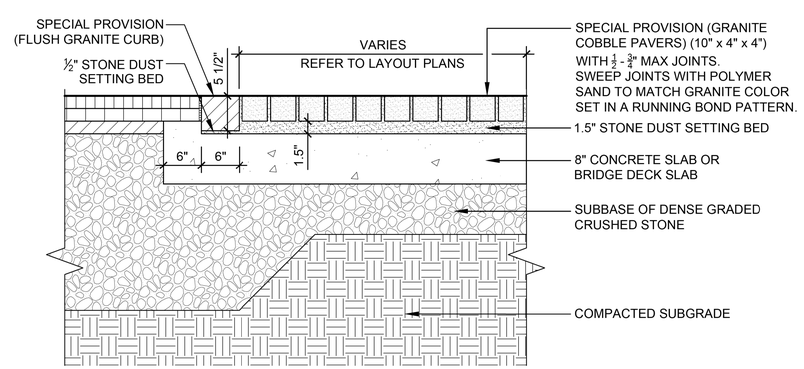

3 SPECIAL PROVISION (GRANITE COBBLE PAVERS) (10"X4"X4")

SCALE 1" = 1'-0"

NOTES
1. REFER TO GRADING PLAN FOR CURB REVEAL INFORMATION

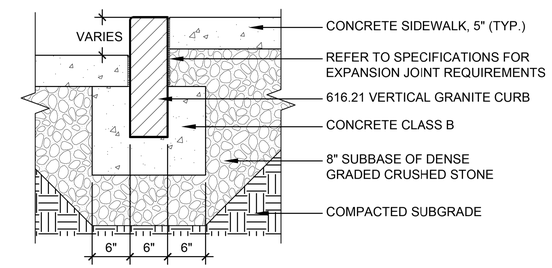

6 SPECIAL PROVISION (CONCRETE BACKED VERTICAL GRANITE CURB)

SCALE 1" = 1'-0"

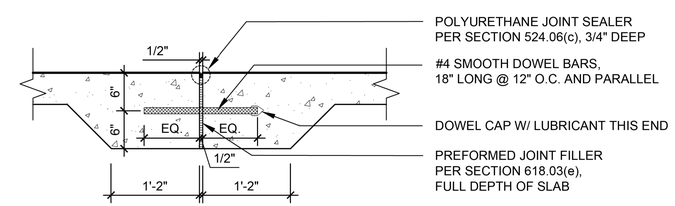

DOWELED EXPANSION JOINT

2 JOINTS - CONCRETE SIDEWALK

SCALE 1" = 1'-0"

PROJECT NAME: MIDDLEBURY	
PROJECT NUMBER: WCRS(23)	
FILE NAME: zl3g542bdr_landscape.dgn	PLOT DATE: 4/30/2019
PROJECT LEADER: A.P. GUYETTE	DRAWN BY: L. THAYER
DESIGNED BY: M. HAMELIN	CHECKED BY: M. WILLARD
SITE DETAILS (1 OF 3)	SHEET 284 OF 328

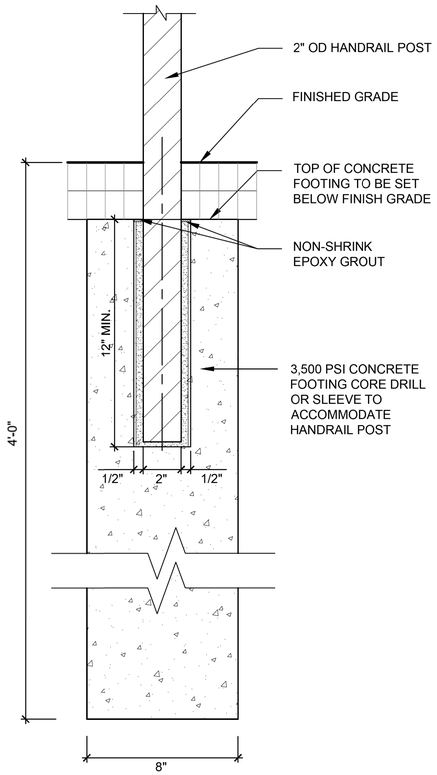

4 HANDRAIL POST FOOTING

SCALE 3" = 1'-0"

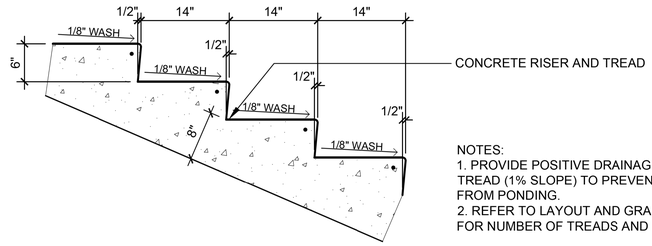

NOTES:
1. PROVIDE POSITIVE DRAINAGE ON EACH TREAD (1% SLOPE) TO PREVENT WATER FROM PONDING.
2. REFER TO LAYOUT AND GRADING PLANS FOR NUMBER OF TREADS AND RISERS

2 14" CONCRETE TREAD W / 6" RISER

SCALE 1" = 1'-0"

NOTES:
1. CONTRACTOR TO PROVIDE SHOP DRAWINGS OF HANDRAIL AND POST LOCATIONS FOR REVIEW AND APPROVAL BY LANDSCAPE ARCHITECT.

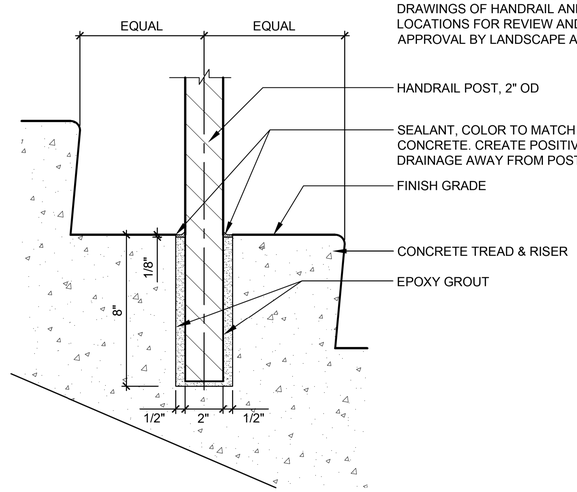

3 HANDRAIL POST ANCHOR

SCALE 3" = 1'-0"

NOTES:
1. CONTRACTOR TO VERIFY NUMBER OF TREADS AND RISERS ON THE LAYOUT AND GRADING PLANS.
2. CONTRACTOR TO PROVIDE SHOP DRAWINGS FOR HANDRAILS.
3. ALL REBAR REINFORCING SHALL BE A MIN. OF 3" CLEAR FROM SURFACE OF CONCRETE.
4. CONCRETE STAIRS WILL BE PAID UNDER:
   ITEM #541.25 CONCRETE CLASS B
   ITEM #507.11 REINFORCING STEEL LEVEL 1

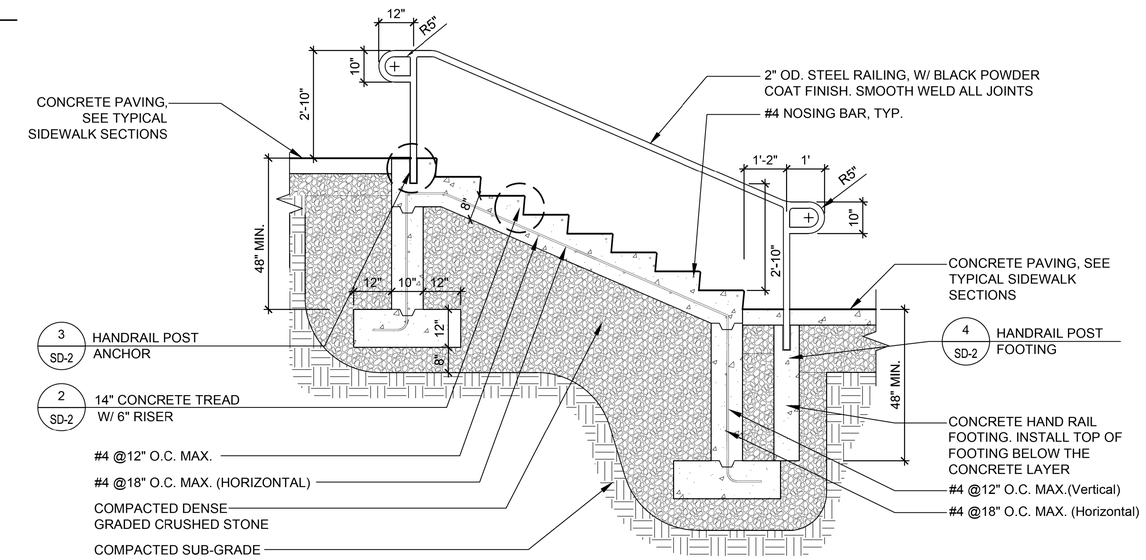

1 SPECIAL PROVISION (CONCRETE STEPS)

SCALE: 1/2" = 1'-0"

NOTES:
1. TYPICAL POST SPACING IS 6' O.C., EQUALLY SPACE POSTS AS REQUIRED.
2. HANDRAIL POST SPACING SHALL NOT EXCEED 8' MAX. O.C.
3. CONTRACTOR TO PROVIDE SHOP DRAWINGS FOR HANDRAILS, HANDRAIL LAYOUT AND POST SPACING FOR REVIEW AND APPROVAL.

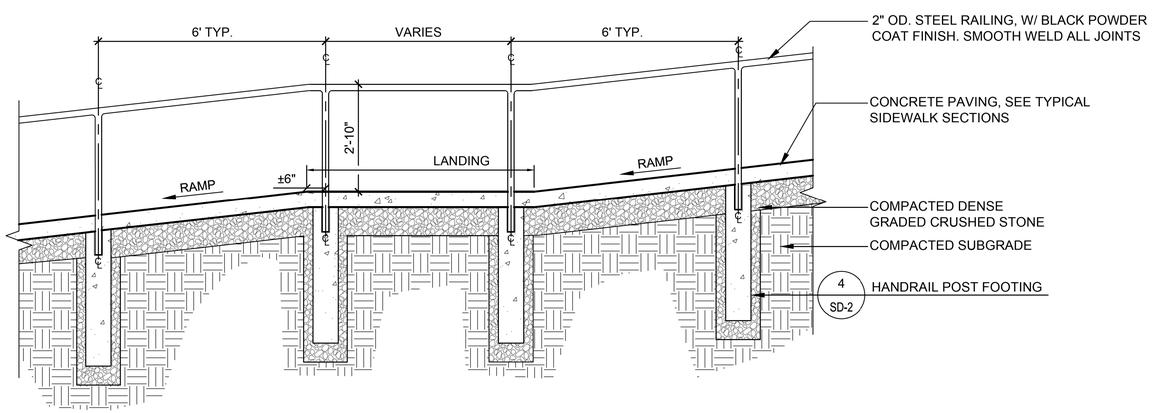

5 SPECIAL PROVISION (METAL HAND RAILING)

SCALE: 1/2" = 1'-0"

NOTES:
1. INSTALL PER MANUFACTURE'S RECOMMENDATIONS.

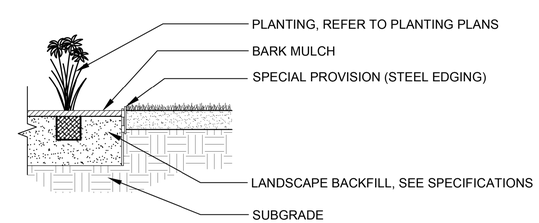

6 SPECIAL PROVISION (STEEL EDGING)

SCALE 1/2" = 1'-0"

PROJECT NAME: MIDDLEBURY	
PROJECT NUMBER: WCRS(23)	
FILE NAME: z13g542bdr_landscape.dgn	PLOT DATE: 4/30/2019
PROJECT LEADER: A.P. GUYETTE	DRAWN BY: L. THAYER
DESIGNED BY: M. HAMELIN	CHECKED BY: M. WILLARD
SITE DETAILS (2 OF 3)	SHEET 285 OF 328