STATE OF VERMONT
AGENCY OF TRANSPORTATION

Scoping Report

FOR

Hartford (Quechee) NH 020-2(45)

US Route 4, BRIDGE 61 OVER OTTAUQUECHEE RIVER

January 22, 2018

Table of Contents

Table of Contents **2**

I. Site Information **4**

Purpose and Need 4

Traffic 5

Design Criteria 5

Inspection Report Summary 5

Hydraulics 6

Utilities 6

Right Of Way 7

Resources 7

Biological: 7

Hazardous Materials: 8

Historic: 8

Archaeological: 8

Stormwater: 8

II. Safety **9**

III. Maintenance of Traffic **10**

Option 1: Off-Site Detour 10

Option 2: Phased Construction/Temporary Lane Closures 11

Option 3: Temporary Bridge 11

IV. Alternatives Discussion **12**

No Action 12

Preventative Maintenance 12

Cleaning and painting the steel arch members: 12

Replacement of deteriorated steel members: 13

Bridge joint repair or replacement: 16

Bearing rehabilitation/replacement: 17

Deck membrane and pave application: 17

Widening of existing sidewalks – New concrete sidewalks and fascias: 17

Partial Deck Replacement: 19

Silane application to the substructures and new concrete sidewalks and fascias: 19

Slope stabilization: 20

Superstructure Replacement 20

Full Bridge Replacement On-Alignment 20

V. Cost Matrix **21**

VI. Conclusion **22**

Structure Recommendations 22

Traffic Control 23

Bridge Inspection Issues 24

Suicide Prevention Means 24

VII. Appendices **24**

Site Pictures 25

Town Map 28

Bridge Inspection Report 29

Bridge Inspection Form 30

Resource Completion Memo 34

Natural Resources Memo 36

Archeology Memo 37

Historic Memo 38

Crash Data 47

High Crash Location List 49

Utility Information 50

District Input 51

Local Input 55

Detour Map 60

Plans 62

I. Site Information

Bridge 61 is a State owned bridge located on US Route 4 over the Quechee Gorge approximately 3.6 miles east of the junction with VT Route 12S in the Town of Hartford. The bridge is located on a straight horizontal tangent with a curve off each of the approaches. There is a sidewalk on both sides of the bridge. The sidewalk only continues off the bridge at the northeast quadrant. The existing conditions were gathered from a combination of a Site Visit, the Inspection Report, the Route Log and the existing Survey. See correspondence in the Appendix for more detailed information.

Roadway Classification	Principal Arterial (On National Highway System)
Bridge Type	3-Hinge Steel Deck Arch
Bridge Length	285 feet
Year Built	1911, Reconstructed in 1972 and 1989
Ownership	State of Vermont

Purpose and Need

The Quechee Gorge Bridge has been identified as a "Forever Bridge". Due to the construction costs for a replacement of this high value structure along with its highly significant historic value, preservation of the existing bridge is desired to keep it in service as long as possible.

All preventative maintenance options being considered will also include suicide mitigation considerations/retro fits as discussed in the "Quechee Gorge Bridge Safety Issues: Suicide Prevention Alternatives" report to the Vermont Legislature dated January 10, 2017. This report can be found at the following website for reference:
http://vtrans.vermont.gov/sites/aot/files/planning/documents/planning/QGB-SafetyIssues_FinalReport.pdf.

A project addressing long term suicide prevention retrofits at the Bridge will also evaluate the bridge maintenance options that are needed.

Bridge 61 carries US Route 4 over the Quechee Gorge. The following is a list of deficiencies of Bridge 61 and US Route 4 in this location:

1. Bridge 61 is overall in satisfactory condition. However, there are several rehabilitation/preventative maintenance actions that are needed: the Vermont expansion bridge joints are deteriorating, the lattice plates and gusset plates are in need of reinforcement the steel members have peeling paint and progressive corrosion, the bearings are corroding and starting to crush. Additionally, the eastern slope is comprised of shale that is seeing erosion.

2. There have been 15 suicides at the bridge since 2003.

3. There is a high crash location located at Bridge 61. There have been 22 crashes in the last 5-year period. All of the crashes were rear-ends and 4 of the crashes resulted in injury.

4. The shoulders on US Route 4 are substandard by 4 feet throughout the project area. Additionally, there is a substandard horizontal curve on the bridge approach.

Traffic

A traffic study of this site was performed by the Vermont Agency of Transportation. The traffic volumes are projected for the years 2021 and 2041.

TRAFFIC DATA	2021	2041
AADT	9,200	10,000
DHV	1,100	1,200
ADTT	660	1,100
%T	3.9	5.7
%D	58	58

Design Criteria

The design standards for this bridge project are the Vermont State Standards, dated October 22, 1997. Minimum standards are based on a DHV>400 and a design speed of 35 mph for a Principal Arterial.

Design Criteria	Source	Existing Condition	Minimum Standard	Comment
Approach Lane and Shoulder Widths	VSS Table 3.3	12'/4' (32')	11'/8' (38') roadway typical	Substandard shoulder widths
Bridge Lane and Shoulder Widths	VSS Section 3.3	4'-11'-11'-4' with 3.5' sidewalks on each side of the bridge	11'/8' (38') roadway typical 5' Minimum sidewalk width	Substandard shoulder and sidewalk widths
Clear Zone Distance	VSS Table 3.4	No Issues Noted	16' fill / 14' cut 1.5' behind curb	
Banking	VSS Section 3.13	e=3.7% (eastern approach) e=6% (western approach)	8% (max)	
Speed		35 mph (Posted)	35 mph (design)	
Horizontal Alignment	AASHTO Green Book Table 3-10b	R = ∞ (over bridge) R=2,150 (eastern approach) R=830 (western approach)	R_{min} = 1,570' @ e=3.7% R_{min} = 713' @ e=6%	
Vertical Grade	VSS Table 3.6	-0.04%	8% for level terrain	Minimum grade of 1% over bridge recommended for drainage
K Values for Vertical Curves	VSS Table 3.1	K_{crest} (over bridge) = No vertical curve	40 crest / 50 sag	
Vertical Clearance	VSS Section 3.8	No Issues Noted	16'-3" (min)	
Stopping Sight Distance	VSS Table 3.1	N/A	225'	
Bicycle/Pedestrian Criteria	VSS Table 3.7	4' shoulder	4' shoulder	
Bridge Railing	Structures Design Manual Section 13	4-Rail Aluminum Railing (TL-2)	TL-3	Substandard
Structural Capacity	SM, Ch. 3.4.1	Not Deficient, H-15 loading	Design Live Load: HL-93	

Inspection Report Summary

Deck Rating	7 Good
Superstructure Rating	5 Fair
Substructure Rating	6 Satisfactory
Channel Rating	8 Very Good

5/9/2017 – (*Servi Lift Inspection 7/26/2017) A Joint replacement project should be considered, as well as repairs and replacement of deteriorated steel connection members (lateral bracing and gusset plates). The hinged areas at mid-span have significant surrounding pack rust in the gusset and connection plates, displacing the exterior of the steel plating as much as 2". The lattice bracing along the arch as well as lateral bracing beam members need to be repaired and or replaced. The riveted girder bearings should be replaced due to section loss and crushing that is visible at abutment 1. ~JW/SP

05/22/2015 – Bridge needs attention to address chronic deterioration issues. The Vermont expansion joints are quite poor and leak and have been repaired multiple times and need upgrading with consideration to possibly omitting the mid length joint. The steel superstructure needs strengthening measures and replacement of deteriorated components particularly gussets and lattice. The lattice between the built up arch members are very important to maintain rib alignment and need upgrading and or augmentation with stay plating. Warped and pried gussets at panel points and pins should be replaced. The entire structure needs extensive cleaning and repainting to deter further corrosion which is progressing. The eastern slope which has had chronic erosion of the shale ledge and old laid up stone remnants needs to be stabilized. Material has been dropping onto the bracing and hinge bearings in this location for years. Approach rail and southwest end bridge rail post needs replacement. ~MJ/TB

Hydraulics

The bridge crosses over the Quechee Gorge. For a principal Arterial, the bridge must pass 50-year design flood with 1' of freeboard and have no roadway overtopping during the 100-year flood. Due to the vertical clearance over the Ottauquechee River, no hydraulic study is being performed at this time. There are no hydraulic concerns at this bridge, as the bridge will pass all design floods (including the 500-year flood event).

Utilities

The existing utilities are shown on the Existing Conditions Layout Sheet, and are as follows:

<u>Municipal Utilities (Town of Hartford Sewer and Water Mains):</u>

- Municipal Water Mains: The Town of Hartford owns an 8-inch Ductile Iron Water Main along the northern edge of US Route 4 thru the entire project area. This water main is attached to the fascia along the northern side of the bridge.

- Municipal Sewer Mains: The Town of Hartford has confirmed that there are no municipal sewage facilities in the vicinity of this bridge. The manholes in the sidewalk along the northern side of US Route 4, and the manholes in Dewey Mills Road are all drainage structures.

<u>Public Utilities (Underground)</u>

- There is an electric cable which extends from the power stanchion in the US 4/Dewey Mills Road intersection to the bridge along the northern side of US Route 4. This purpose of this power supply is for the heat tape on the bridge mounted water main.

<u>Public Utilities (Aerial)</u>

- West of the bridge: The nearest aerial facilities to the west along US Route 4 are at the VINS entrance, almost 0.4 miles away. These aerial facilities will have no impact on the project.

- East of the bridge: The nearest pole to the east end of the bridge is located in the US 4/Dewey Mills Road intersection. From the pole aerial facilities owned by GMP, Comcast and FairPoint continue to the east along the northern side of US Route 4 and turn down Dewey Mills Road. It is unlikely that these aerial facilities will have any impact on the construction of this project.

The 8-inch water main currently attached to the northern fascia may need to be relocated during construction depending on the scope of work.

Right Of Way

It is anticipated that a rehabilitation project would not require Right-of-Way to be acquired.

Resources
The environmental resources present at this project are shown on the Existing Conditions Layout Sheet, and are as follows:

Biological:

Wetlands/Watercourses
There are no wetlands or watercourses within the project area.

The Ottauquechee River flows under the project area.

Wildlife Habitat
It is assumed that the Ottauquechee is a corridor for both terrestrial, avian and aquatic fish and wildlife. Due to the height of the bridge, it is not anticipated that work on the bridge will interrupt any movement.

The area directly south of the bridge is a mapped deer wintering area. Tree clearing should be avoided or minimized to the best extent practicable.

Rare, Threatened and Endangered Species
There are seven rare, threatened or endangered species mapped in the project area. These range from plants to bats and birds. Any tree clearing or access that will require the clearing of vegetation will require closer review due to the sensitive nature of the area surrounding the bridge.

This area is also within a one-mile radius of a known norther long-eared bad hibernaculum. This species is federally threatened and any work on the bridge will likely require time-of-year restrictions or exit surveys performed by a certified biologist. All tree clearing and bridge work must be reviewed by a VTrans biologist. There are several areas, mainly at the joints, that appear to be potential bat roosting habitat.

Agricultural Soils / Floodplains

There are statewide agricultural soils adjacent to the project area.

Hazardous Materials:

According to the Vermont Agency of Natural Resources (VANR) Vermont Hazardous Sites List, there are no hazardous waste sites located in the immediate project area. It is anticipated that no hazardous waste sites will be impacted.

Historic:

The Quechee Gorge Bridge, is the only historic resource identified within the project area. Additionally, one Section 4(f) property type was identified within the project area: the Quechee State Park.

Bridge 61, The Quechee Gorge Bridge

Constructed in 1911, Bridge 61 was designed for the former Woodstock Railroad by John W. Storrs. Fabricated by the American Bridge Company, this arched tri-span, parabolic spandrel-braced steel Pratt truss measures 285 feet long by 41 feet wide and carries US Route 4 approximately, 163 feet above the Ottauquechee River in Quechee Village, Hartford, Windsor County, Vermont.

Today, Bridge 61 is the largest steel arch truss bridge in Vermont. When the structure was converted to automobile use during the Great Depression, its deck was substantially altered, including the addition of a paved roadway and railings. However, these alterations did not substantially diminish the historic integrity of the Quechee Gorge Bridge and today, metal railings line both sidewalks at the inner and outer edges of this structure. The extant railings and fencing on the Quechee Gorge Bridge are not considered character defining features of this NRHP-listed structure.

Quechee State Park

Located at the southeastern, southwestern, and northwestern corners of Bridge 61, Quechee State Park is considered a Section 4(f) property type. Project-related impacts to this park should be avoided, if possible. Specifically, areas of the park designated as a recreation area, such as a campground, wildlife refuge, or historic site.

Dewey Building

At the northeastern corner of Bridge 61, is a one-story commercial building that is currently the location of Quechee Gorge Gifts & Sportswear. This building is not considered a historic resource under Section 106, as it has been significantly altered, including additions to its roof, main facade, fenestration, and the addition of a large, rectangular one-story ell at its rear since its construction in 1946-47. Although some original design elements are still legible from the building's exterior, VTrans has determined that the former Dewey Corporation building does not retain sufficient historic integrity for individual inclusion in the NRHP.

Archaeological:

There are no archaeological resources within the area around Bridge 61. This bridge was constructed as part of the Woodstock Railroad which ran through the corridor in the early 20th century. Once the tracks were removed, the Vermont Highway Department constructed US Route 4 along the same footprint. Heavy blasting and earth removal were incorporated into the construction during the initial railway build, and the entirety of all four project quadrants show evidence of heavy disturbance.

Stormwater:

There are no stormwater concerns for this project.

II. Safety

The stretch of US Route 4 through the project area has had 37 crashes recorded in the last five-year period and is considered a high crash location. The VTrans Traffic Safety Engineer analyzed the crash data and it was found that most of the crashes on this section of road are rear-end crashes due to vehicles stopping for a pedestrian in a crosswalk.

From the location data available, most of these rear-end crashes are taking place in the westbound direction near the western pedestrian crossing. The typical series of events is that a motorist stops for a pedestrian in the crosswalk, and that somebody in the queue of traffic rear-ends a vehicle in front.

According to the crash reports, those who are at fault are either following too closely or being distracted. The crash narratives do not identify the sources of distraction in these cases. It is possible that motorists are being distracted by the pedestrians who walk on the sidewalks or because they are looking away at the gorge or for whatever other reasons.

One of the focuses should be to alert approaching drivers that pedestrians are crossing (alerting drivers down the queue of traffic).

A low cost option for alerting drivers of crossing pedestrians is to install pedestrian signs with LEDs around the edges (see picture to the right). These would be activated with a push button by the pedestrians. They should be gate posted to provide a better cone of vision (The existing pedestrian signs at the crosswalks are currently gate posted). The sigs at both crosswalks in both directions should be upgraded with the LED system.

A costlier option would be to consider pedestrian hybrid beacons, such was installed on VT Route 15 in Colchester (see picture below). Because the two crosswalks are close to each other, having two of these may not be feasible.

Another potential countermeasure could be to consolidate the two crosswalks into one. This would require extra fencing at both ends to prevent pedestrians from jaywalking. The two crosswalks are currently about 400 feet apart.

III. Maintenance of Traffic

The Vermont Agency of Transportation reviews each new project to determine suitability for the Accelerated Bridge Program, which focuses on faster delivery of construction plans, permitting, and Right of Way, as well as faster construction of projects in the field. One practice that will help in this endeavor is closing bridges for portions of the construction period, rather than providing temporary bridges. In addition to saving money, the intention is to minimize the closure period with faster construction techniques and incentives to contractors to complete projects sooner. The Agency will consider the closure option on most projects where rapid reconstruction or rehabilitation is feasible. The use of prefabricated elements in new bridges will also expedite construction schedules. This can apply to decks, superstructures, and substructures. Accelerated Construction should provide enhanced safety for the workers and the travelling public while maintaining project quality. The following options have been considered:

Option 1: Off-Site Detour

This option would close the bridge and reroute traffic onto US Route 5, to VT Route 12, back to US Route 4. This regional detour has an end-to-end distance of 26.8 miles and adds approximately 7.6 miles to the through route travel distance.

There are several local bypass routes that may see an increase in traffic from local passenger cars. Local bypass routes are not signed detours, but may experience higher traffic volumes if US Route 4 is closed during construction. The most likely local bypass routes are as follows:

1. US Route 4, to Deweys Mills Road, Quechee Main Street, and Waterman Hill Road, back to US Route 4 (3.0 miles end-to-end)

This local bypass route has an end-to-end distance of 3.0 miles and adds approximately 1.2 miles to the through route travel distance. This route is not appropriate for trucks since the Quechee Covered Bridge is located on Waterman Hill Road. If a short-term closure is required, outreach with the trucking community as well as a signed truck detour route onto US Route 5 and VT Route 12 will be required.

Since there is a sidewalk on the existing bridge, pedestrian accommodations would need to be made during construction. Either a temporary pedestrian bridge or a shuttle bus around the project would be recommended.

A map of the detour route and a possible local bypass route, which could see an increase in traffic, can be found in the Appendix.

Advantages: This option would eliminate the need for a temporary bridge, which would significantly decrease cost and time of construction. This option reduces the time and cost of the project both at the development stage and construction and reduces impacts to surrounding resources.

Disadvantages: Traffic flow would not be maintained through the project site during construction.

Option 2: Phased Construction/Temporary Lane Closures

Phased construction is the maintenance of traffic on the existing bridge while building one lane at a time of the proposed structure. This allows the road to be kept open during construction with minimal impacts to adjacent property owners and environmental resources.

While the time required to develop a phased construction project would remain the same, the time required to complete a phased construction project increases because some of the construction tasks have to be performed multiple times. In addition to the increased design and construction costs mentioned above, the costs also increase for phased construction because of the inconvenience of working around traffic and the effort involved in coordinating the joints between the phases. Another negative aspect of phased construction is the decreased safety of the workers and vehicular traffic, which is caused by increasing the proximity and extending the duration that workers and moving vehicles are operating in the same confined space. Phased construction is usually considered when the benefits include reduced impacts to resources and decreased costs and development time by not requiring the purchase of additional ROW or construction of a temporary bridge.

Based on the high traffic volumes, there would be significant delays and traffic congestion, if only one lane of traffic was maintained both ways, with a traffic signal or flaggers. As such, it is recommended that any lane closures take place outside of peak hours.

Some of the preventative maintenance options considered can be accomplished using a width reduction with two-way traffic maintained. However, some maintenance activities will require a full lane closure, with night work.

There is a sidewalk on the existing structure, and pedestrian traffic should be maintained during any lane closures as well. Since there is a sidewalk located on both sides of the bridge, this can be accomplished without unnecessarily widening the bridge.

Option 3: Temporary Bridge

A temporary bridge for this project would be extremely expensive due to the needed span and depth of the gorge. There is a gift shop and snack bar located in the northeast quadrant of the project area. Since there are no structures located south of the bridge, a temporary bridge would be placed on the southern side of the existing bridge. A large section of trees would need to be cleared for this option.

Significant additional costs would be incurred to use a temporary bridge, including the cost of the bridge itself, installation and removal, restoration of the disturbed area, and the time and money associated with the temporary Right-of -Way.

Since there is a sidewalk on the existing bridge, pedestrian traffic needs to be maintained on any temporary bridge. A two-way temporary bridge with accommodations for pedestrians would be appropriate based on the daily traffic volumes. The temporary bridge layout can be found in the Appendix.

IV. Alternatives Discussion

No Action

This alternative would involve leaving the bridge in its current condition. A good rule of thumb for the "No Action" alternative is whether the bridge can stay in place without any work being performed on the bridge in the next 10 years. Bridge 61 is not considered structurally deficient, and is overall in satisfactory condition. However, The Quechee Gorge Bridge has been identified as a "Forever Bridge" and preservation of the existing bridge is desired to keep it in service as long as possible. Due to the current needs at the Bridge, the No Action alternative is not recommended. A cost estimate has not been provided for this alternative since there are no immediate costs.

Preventative Maintenance

There are several preventative maintenance options available based on the current condition of each of the bridge components. Potential options being considered for preventative maintenance include but are not limited to the following:

- Cleaning and painting the steel arch members
- Replacement of deteriorated steel members
- Bridge joint repair or replacement
- Bearing rehabilitation/replacement
- A deck membrane and pave application
- Widening of the existing Sidewalks – New concrete sidewalks and fascias
- Partial deck replacement to the approximate limits of the 1972 deck and sidewalk reconstruction, and
- Silane application to the substructures and new concrete sidewalks and fascias
- Slope stabilization

All preventative maintenance options being considered will also include suicide mitigation considerations/retro fits as discussed in the "Quechee Gorge Bridge Safety Issues: Suicide Prevention Alternatives" report.

Cleaning and painting the steel arch members:

This option would include cleaning and painting the existing steel arch in place. Painting the existing members would provide a new protective coating for the bridge and extend the life of the members. Currently, the existing paint is starting to corrode in some areas, exposing the steel members underneath.

The preparation for a new coat of paint will be complex as old paint will need to be removed prior to a new coat of paint. Additionally, the removed paint will need to be contained and disposed of in an appropriate way to prevent lead

contamination to the surrounding environment. In order to contain all potentially hazardous material, the bridge will need to be completely enclosed in a temporary tent.

Due to the height of the bridge and complexity of the structure, it is recommended that the arch members are field painted in place.

Replacement of deteriorated steel members:

The gussets and lattice of the arch are in poor condition with a fair amount of section loss. The arch lattice is important for keeping the rib of the arch in alignment. At a minimum, replacement of deteriorated lattice should be considered. Consideration should also be made to increasing the size of the lattice for additional design life.

Based on the element level inspection, the following needs have been observed in the steel arch, girders, stringers, and floor beams. The Defects evaluated for a these element are as follow: Corrosion, Cracking, Connection, Distortion, and Damage:

Steel Arch Truss:

Corrosion: 32% of the steel arch members have been determined to be in a fair condition state. This indicates that the members were observed to have freckled rust. The corrosion of the steel has initiated in these areas, and would benefit from a protective paint coating as described in the previous section. 30% of the steel arch members were observed to be in a poor condition state. This indicates that section loss is evident or pack rust is present but does not warrant a structural review. These members should be evaluated for potential replacement in order to extend the life of this structure. 3% of the steel arch members have corrosion that is in a severe condition state. This condition state warrants a structural review to determine the effect on strength or serviceability of the element. It is recommended that any members found to be in severe condition should be replaced to extend the service life of this structure. For estimating purposes, it will be assumed that all members in a severe or poor condition state will be replaced.

Cracking: No Cracking has been observed in 98% of members. 2% of members have a condition state of poor for cracking. This indicates Cracks that are not arrested but do not warrant structural review.

Connection: 50% of the connections are in place and functioning as intended. 40% of the connections have loose fasteners or pack rust without distortion but the connections are in place and functioning as intended. 10% of the connections are in a poor condition state. This indicated missing bolts, rivets, or fasteners; broken welds; or pack rust with distortion but does not warrant a structural review.

Distortion: 90% of the Truss members have no distortion. 10% of the members are rated as having distortion that does not require mitigation or already mitigated distortion.

Damage: No impact damage observed.

Girders:

Corrosion: 30% of the girder elements have been determined to be in a fair condition state. This indicates that freckled rust was observed. The corrosion of the steel has initiated in these areas, and would benefit from a protective paint coating as described in the previous section. 30% of the girders were observed to be in a poor condition state. This indicates that section loss is evident or pack rust is present but does not warrant a structural review. These members should be evaluated for potential rehabilitation or replacement in order to extend the life of this structure.

Cracking: No Cracking observed.

Connection: 60% of the connections are in place and functioning as intended. 20% of the connections have loose fasteners or pack rust without distortion but the connections are in place and functioning as intended. 20% of the connections are in a poor condition state. This indicated missing bolts, rivets, or fasteners; broken welds; or pack rust with distortion but does not warrant a structural review.

Distortion: 90% of the beams have no distortion. 10% of the beams are rated as having distortion that does not require mitigation or already mitigated distortion.

Damage: No impact damage observed.

<u>*Stringers:*</u>

Corrosion: 30% of the stringers have been determined to be in a fair condition state. This indicates that freckled rust was observed. The corrosion of the steel has initiated in these areas, and would benefit from a protective paint coating as described in the previous section. 10% of the stringers were observed to be in a poor condition state. This indicates that section loss is evident, or pack rust is present but does not warrant a structural review. For estimating purposes, it will be assumed that the stringers will be cleaned and painted only. However, the members found to be in poor condition should be evaluated for potential rehabilitation or replacement in order to extend the life of this structure.

The stringers are rated as 100% in a good condition state in terms of cracking, connection, distortion, and damage.

Floor Beams:

Corrosion: 20% of the floor beams have been determined to be in a fair condition state. This indicates that freckled rust was observed. The corrosion of the steel has initiated in these areas, and would benefit from a protective paint coating as described in the previous section. 10% of the floor beams were observed to be in a poor condition state. Based on these condition states, a protective paint coating as described in the above section is appropriate at the time.

Cracking: No cracking observed.

Connection: 98% of the connections are in place and functioning as intended. 2% of the connections are in a poor condition state. This indicates missing bolts, rivets, or fasteners; broken welds; or pack rust with distortion but does not warrant a structural review.

Distortion: No distortion observed.

Damage: No impact damage observed.

Bridge joint repair or replacement:

There are currently three Vermont expansion joints on the bridge that are all in poor condition and are not functioning as intended. The VTrans Maintenance and Operations section has indicated that the existing joints are a constant maintenance problem, and that welding repairs to the joints has been required on a frequent basis.

The joints are leaking water and salt onto components below causing accelerated deterioration. Leakage is evident along the backwalls with minor rust staining and efflorescence. The joint at the midspan continues to leak onto the superstructure causing advanced deterioration. Removal of this joint should be considered in design. Replacement of all three joints should be included in any rehabilitation project to extend the life of the structure. This work would require traffic to be phased during construction. Traffic would be reduced down to one lane during off peak hours, and opened up back to traffic during peak hour traffic.

Bearing rehabilitation/replacement:

<u>*Bearing replacement at abutments:*</u>
The bearings located at the abutments are in poor condition. The steel plates at the girders have heavy rust scale and areas of extensive section loss with crushing. Additionally, rust expansion is causing the stringers/girders to lift. The bearings located at the abutments should be considered for replacement as part of the rehabilitation project.

<u>*Pedestal Rockers:*</u>
The pedestal rockers of the pined deck arch have heavy rust scale and deep pitting surrounding the pinned connections, and slotted pitting along the gusset plate connections. These bearings should be rehabilitated as part of a preventative maintenance project.

Deck membrane and pave application:
The deck was replaced as part of a reconstruction project in 1989. The current condition is rated as good; however, the original membrane is likely reaching the end of design life as evident by minor cracks and leaks. There is some seepage through the deck below the curb lines causing some corrosion along the exterior steel beams. Deck membrane applications have demonstrated a design life of approximately 80 years when a spray applied membrane is used. A spray membrane and pave application is recommended for the Quechee Gorge Bridge to further extend the design life of the deck. A membrane and pave application could be constructed using phased construction or a 24-hour closure.

Widening of existing sidewalks – New concrete sidewalks and fascias:
Currently, there is a sidewalk on both sides of the bridge. Both sidewalks are 4.2 feet in width, which does not meet the current pedestrian usage needs of the bridge. While a 4' sidewalk meets the minimum criteria for sidewalks according to ADA standards, a minimum sidewalk width of 5' is preferred. Due to the heavy seasonal usage of the bridge and the occurrence of tourists sightseeing on the bridge and using the bridge as a place to stop and take pictures, an even wider sidewalk may be considered appropriate here.

In order to properly maintain the bridge during the winter, a 28 foot paved width should be maintained at a minimum. The current fascia to fascia deck width is 41 feet. In order to provide 5 foot sidewalks along with steel balusters and crash tested bridge railing, the deck needs to be 43'-8¾". In order to accomplish this, a new sidewalk will need to be constructed and a thicker sidewalk will be required in order to cantilever further than existing. In order to maintain the existing curb reveal, a shallower sidewalk support beam will be required

Five sidewalk configurations were investigated as part of a scoping study done by Dubois and King in January 2017 that assessed the different alternatives for suicide prevention at the bridge. The proposed alternative recommended new steel balusters added to the bridge, with the following typical section proposed:

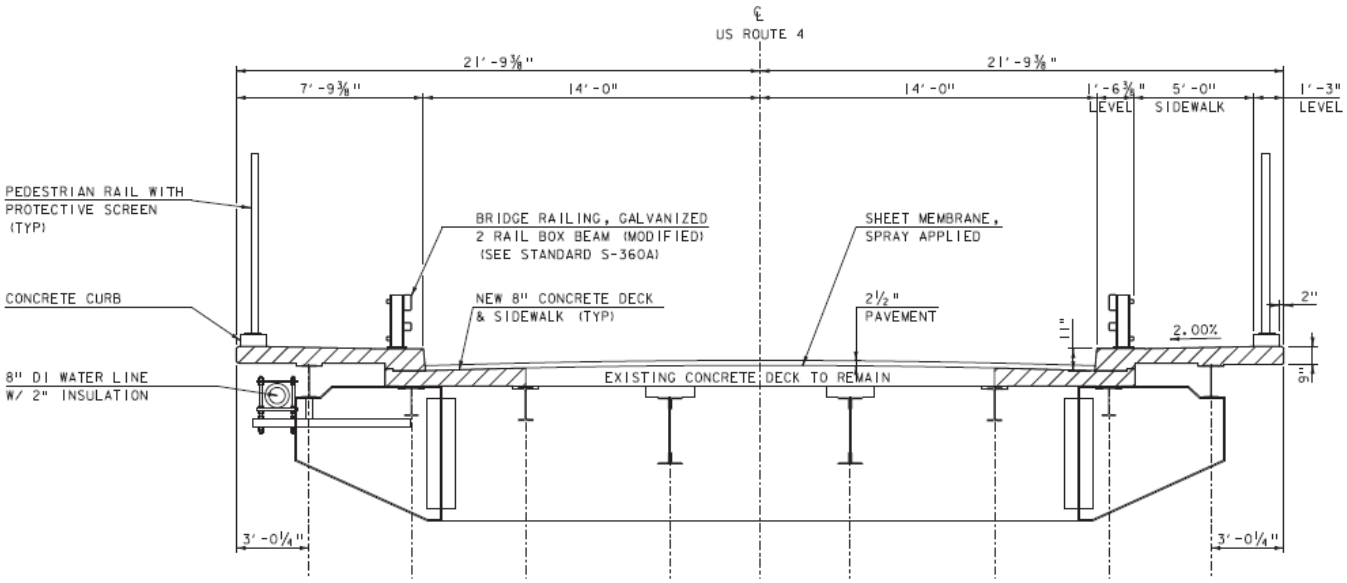

Note that the type of pedestrian railing or means for suicide mitigation has not been determined to date.

If the existing sidewalk is not widened as part of this project, it is recommended that repairs are made to any damaged or deteriorated areas on the deck fascia.

Partial Deck Replacement:

The bridge deck was partially replaced in 1989 as part of the HARTFORD F-DECK(34) project. This project only replaced the 19.5' section of deck between girders 3 and 6. The outer portions of the deck were replaced in 1972, and are due for another replacement. This work would include entirely removing the outer section of each side of the deck, and pouring new concrete (See the above typical section in the 'Widening of existing sidewalks – New concrete sidewalks and fascias' section).

This work would prohibit traffic from driving on the outer portion of the deck for approximately 3 weeks. Due to the high traffic volumes, reducing traffic down to one lane for that period of time is not recommended. By constructing one side at a time of the new deck, two 10-foot lanes of traffic can be maintained during construction. The minimum desirable lane width for construction zones is 12-feet, and detouring trucks during the 3-week reduction in lane width should be considered by the project manager.

If both the partial deck replacement and sidewalk widening are to be completed as part of this project, then it would be recommended to replace the outer deck portion along with the sidewalk on one side and then the deck and sidewalk on the other side to minimize disruptions to traffic.

Silane application to the substructures and new concrete sidewalks and fascias:

One of the major culprits of concrete degradation on bridges is moisture. There is a bridge joint located above each of the abutments at the begin bridge and end bridge locations. Leakage is evident along the backwalls with minor rust staining and efflorescence. All exposed concrete on the bridge should be sprayed with silane water repellant to prevent moisture from penetrating the concrete. This is intended to protect the degrading concrete for several years against moisture damage.

Additionally, there are localized areas of minor concrete spalling at the abutments. Consideration should be given to patching the concrete in these areas.

Concrete patching and a silane application of the substructures as well as a silane application to the new sidewalks and fascias would have little impacts to traffic.

Slope stabilization:

The eastern slope is comprised of shale and an old laid up stone wall. The shale is continuously eroding, causing stone to fall and build up on the bracing and hinge

bearings in that location. The shale should be stabilized to limit further erosion. There are several stabilization methods available, such as: protection of the face with shotcrete, rock bolts, or a tied-back wall.

Shotcrete: This option would involve applying a layer of shotcrete to seal the weathered shale rock slope and prevent further degradation of the slope. This type of application can range in thickness from 0.75 inches to 4 inches. This stabilization technique has a design life of 50 years. In order to provide addition tensile and shear strength, reinforcement fibers will be added to the shotcrete mixture. This application would control progressive raveling that could eventually lead to unstable laid up stone overhangs. Drain holes in the shotcrete may be recommended by the geotechnical section to eliminate water pressure behind the shotcrete layer and extend the design life.

The VTrans Geologist should be contacted during the design phase of any slope stabilization project to determine the appropriate stabilization for this slope.

Superstructure Replacement

This structure is of high historical significance due to the steel arch superstructure. It is the desire of the agency to preserve the superstructure indefinitely. As such, a full superstructure replacement is not being considered here.

Full Bridge Replacement On-Alignment

Due to the historic significance of this structure, a full bridge replacement is not being considered.

V. Cost Matrix[1]

Hartford NH 020-2(45)		Rehabilitation Options Considered									TOTAL COST
		Cleaning and Painting the Steel Arch Members	**Replacement of deteriorated steel members**	**Bridge Joint Replacement**	**Bridge Bearing Replacement**	**Deck Membrane (Spray-on) and Pave Application**	**Silane Application to Exposed Concrete**	**New Concrete Sidewalks**	**Partial Deck Replacement**	**Slope Stabilization (Eastern Abutment)**	
COST	Rehabilitation Cost	$1,650,000	$2,107,000	$479,700	$300,000	$129,930	$7,500	$392,667	$188,200	$336,000	$5,590,997
	Maintenance of Traffic	$6,000	$4,500	$45,000	$500	$42,000	$500	$3,000	$30,000	$500	$125,000
	Construction Costs	$1,656,000	$2,111,500	$524,700	$300,500	$171,930	$8,000	$395,667	$218,200	$336,500	$5,715,997
	Construction Engineering + Contingencies	$82,800	$105,575	$78,705	$30,050	$25,790	$1,200	$59,350	$32,730	$33,650	$448,800
	Total Const. Costs w CEC	$1,738,800	$2,217,075	$603,405	$330,550	$197,720	$9,200	$455,017	$250,930	$370,150	$6,164,796
	Preliminary Engineering[2]	$43,992	$77,598	$48,272	$26,444	$29,658	$920	$45,502	$25,093	$44,418	$340,689
	Total Project Costs	**$1,782,792**	**$2,294,673**	**$651,677**	**$356,994**	**$227,377**	**$10,120**	**$500,518**	**$276,023**	**$414,568**	**$6,505,485**
SCHEDULING	Project Development Duration[3]	4 years	4 years	4 years	4 years	4 years	4 years	4 years	4 years	4 years	
	Construction Duration	1 month	1 month	1 month	7 days	5 days	3 days	1 month	1 month	3 weeks	
	Traffic Control During Construction	Single lane closed on the bridge during off-peak hours					Minimal Traffic impacts anticipated	Traffic lanes reduced to 2 10-foot lanes for 3-weeks with a potential truck detour		Minimal Traffic impacts anticipated	
ENGINEERING	Typical Section - Bridge (feet)	3.5 sidewalk-4-11-11-4-3.5 sidewalk	3.5 sidewalk-4-11-11-4-3.5 sidewalk	3.5 sidewalk-4-11-11-4-3.5 sidewalk	3.5 sidewalk-4-11-11-4-3.5 sidewalk	3.5 sidewalk-4-11-11-4-3.5 sidewalk	3.5 sidewalk-4-11-11-4-3.5 sidewalk	5 sidewalk-3-11-11-3-5 sidewalk	3.5 sidewalk-4-11-11-4-3.5 sidewalk	3.5 sidewalk-4-11-11-4-3.5 sidewalk	
	Bicycle Access	No Change	No Change	No Change	No Change	No Change	No Change	Decreased Shoulder Width	No Change	No Change	
	Pedestrian Access	No Change	No Change	No Change	No Change	No Change	No Change	Improved Sidewalk Width	No Change	No Change	
	Utility	No Change	No Change	No Change	No Change	No Change	No Change	No Change	No Change	No Change	
OTHER	ROW Acquisition	No	No	No	No	No	No	No	No	No	
	Road Closure	No	No	Yes	No	No	No	No	No	No	
	Design Life[4]	40 Years	50 Years	40 Years	50 Years	30 Years	5 Years	50 Years	50 Years	60 Years	

[1] Costs are estimates only, used for comparison purposes.
[2] Preliminary Engineering costs are estimated starting from the end of the Project Definition Phase.
[3] Project Development Durations are starting from the end of the Project Definition Phase.
[4] Design life is specified as the number of years until another in kind treatment will be needed.

VI. Conclusion

Structure Recommendations

To extend the life of the Quechee Gorge Bridge, all rehabilitation options discussed in this report should be considered appropriate at this time. The Bridge is at a point where we can catch the deterioration if we address all the maintenance issues before they get worse. All rehabilitation options being considered will also include suicide mitigation considerations/retro fits as discussed in the "Quechee Gorge Bridge Safety Issues: Suicide Prevention Alternatives" report completed in January 2017.

Based on cost considerations and current maintenance issues, the preventative maintenance options recommended at this time are as follows:

- Cleaning and painting the superstructure members
  - There is scattered minor pitting and moderate rust scale throughout the superstructure. All steel members on the Arch should be cleaned and painted to extend the life of the superstructure. This includes all truss members, stingers, girders, and floor beams. This is expected to extend the life of the steel approximately 40 years.

- Replacement of deteriorated steel members
  - The lattice bracing along the arch as well as lateral bracing beam members need to be repaired or replaced. It is recommended that all lattice members along the Truss are replaced with thicker sections. Additionally, truss members in poor condition should be evaluated and replaced as needed.

- Bridge joint repair or replacement
  - There is heavy spalling and voids in the concrete surrounding the Vermont Joints. All three bridge joints should be replaced. The new joints will have a design life of approximately 40 years. Consideration should be given to removing the center span joint as well to extend the life of steel members below the mid-span joint.

- Bearing rehabilitation/replacement
  - The bridge bearings located at the abutments should be replaced as part of this project. Replacement of the steel plates would involve slightly lifting the existing girders while replacement takes place. New bearings would last approximately 50 years. Additionally, the pedestal rockers at the arch have heavy rust scale and deep pitting surrounding the pinned connections and slotted pitting along the gusset plate connections. The pedestal rockers should be cleaned, reinforced, and painted to further extend the design life.

- A deck membrane and pave application
  - The existing pavement on the bridge should be removed and a spray on membrane should be applied. While the spray on option is three times more expensive than the torch applied membrane, it has been found to have a design life of about 80 years versus the 25 year design life of a torch applied treatment.

- New concrete sidewalks and fascias along with a partial deck replacement to the limits of the 1989 project
  - The sidewalks on both sides of the bridge should be widened to meet the recommended 5-foot width per ADA standards. In order to widen the existing

sidewalk, a thicker section will be needed to accommodate the larger cantilever. The sidewalk support beam should be replaced with a shallower beam to provide the standard curb reveal. In order to accomplish a 5-foot width sidewalk without extending the floor beams, the paved width of the shoulder and travel-way will need to be reduced over the bridge. A 28 foot paved width curb-to-curb should be maintained at a minimum to allow for winter maintenance activities. By reducing the typical section to 11 foot travel lanes with 3 foot shoulders, the out-to-out bridge deck width will need to increase from 41-feet to 43'-8¾". This configuration assumes steel balusters and crash tested bridge railing mounted on the sidewalk.

  - The outer sections of the deck concrete past girders 3 and 6 should be removed and replaced. By constructing one side at a time of the new deck, two 10-foot lanes of traffic can be maintained during construction.

- Silane application to the substructures, new sidewalks, and fascias
  - Silane water repellant should be applied to all exposed concrete on the bridge. This is a low cost solution for ensuring that moisture is prevented from penetrating the concrete. This application is intended to protect the concrete for five years against moisture damage, at which point, the Bridge should have another silane treatment.

- Slope stabilization
  - In order to protect the bracing and hinge bearings at the eastern slope from falling material, the highly erodible shale slope should be stabilized. The VTrans geologist should be consulted for design of the mitigation.

<u>Traffic Control</u>

The recommended method of traffic control for each of the preventative maintenance options is as follows:

- **Single Lane Closed on the bridge during off-peak hours** (Cleaning and painting the steel arch members, replacement of deteriorated steel members, bridge joint repair/replacement, bearing rehabilitation/replacement, and deck membrane and pave application)

  The ADT on US Route 4 through the project area is 10,000, which is considered relatively high. In order to avoid a large queue of traffic on US Route 4, any lane closures should occur at night or during the day in between peak traffic volumes. Off peak lane closures are expected intermittently throughout construction.

- **Traffic lanes reduced to two 10-foot lanes with no shoulders** (Widening of the existing Sidewalks – New concrete sidewalks and fascias, and partial deck replacement to the approximate limits of the 1972 deck and sidewalk reconstruction)

  In order to avoid a large queue on US Route 4, two lane of traffic needs to be maintained during peak hours. The sidewalk and partial deck replacement will require reducing the travel way during construction to 10-foot lanes for a continuous 3-week period. The minimum desirable lane width for construction zones is 12-feet, and as such, detouring trucks during the 3-week reduction in lane width is recommended. The truck detour would reroute truck traffic onto US Route 5, to VT Route 12, back to US Route 4. This regional detour has an end-to-end distance of 26.8 miles and adds approximately 7.6 miles to the through route travel distance.

- **Minimal Impacts to traffic** (Silane application to the substructures and new concrete sidewalks and fascias, and slope stabilization)

The local bypass for this project location would add approximately 1.2 miles to the through route, and has an end-to-end distance of 3.0 miles. This detour is not appropriate for large trucks due to a covered bridge along the route. It is likely that this route will see an increase in traffic during any traffic delays due to construction.

A sidewalk on one side of the bridge will be maintained at all times during construction for pedestrian traffic.

Bridge Inspection Issues
The addition of a suicide prevention barrier or net on the Quechee Gorge Bridge would limit the use of the snooper truck for inspection purposes. In order to ensure inspection activities can still occur, the design project manager should consider a technology that is temporary removable to allow for inspections when needed. This option would require some additional coordination to remove the fence or netting but would ultimately cost the least amount of money, have the smallest impacts to the look of the bridge, and would not require any special equipment or training.

Suicide Prevention Means
The barrier type assumed as part of the scoping phase are steel balusters due to reduced maintenance and inspection costs compared to the netting option. The type of means restriction will be chosen during the design phase through collaboration with all parties involved. If balusters are chosen as the preferred means restriction, than the system should be deigned to match the historic character of the bridge, such as was designed for the Minnesota Highway 149 Smith Ave. High Bridge (Pictured Above).

VII. Appendices

- Site Pictures
- Town Map
- Bridge Inspection Report
- Bridge Inspection Form
- Resource Completion Memo
- Natural Resources Memo
- Archeology Memo
- Historic Memo
- Crash Data
- High Crash Location List
- Utility Information
- District Input
- Local Input
- Detour Map
- Plans

Site Pictures

Western Abutment

Looking east over the bridge

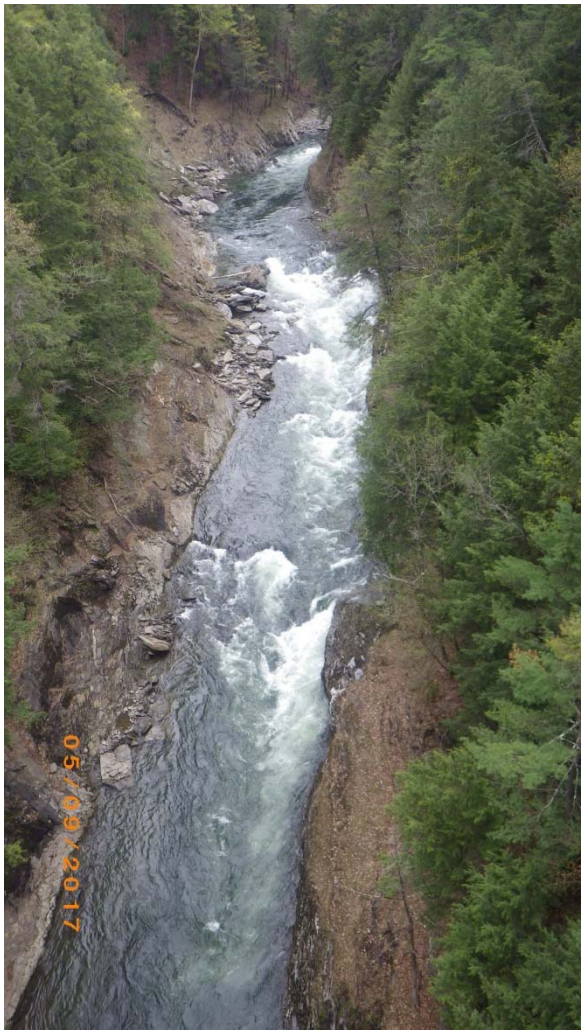

Looking upstream and Downstream at the Quechee Gorge

Eastern Abutment

Pedestal Rockers at the Arch

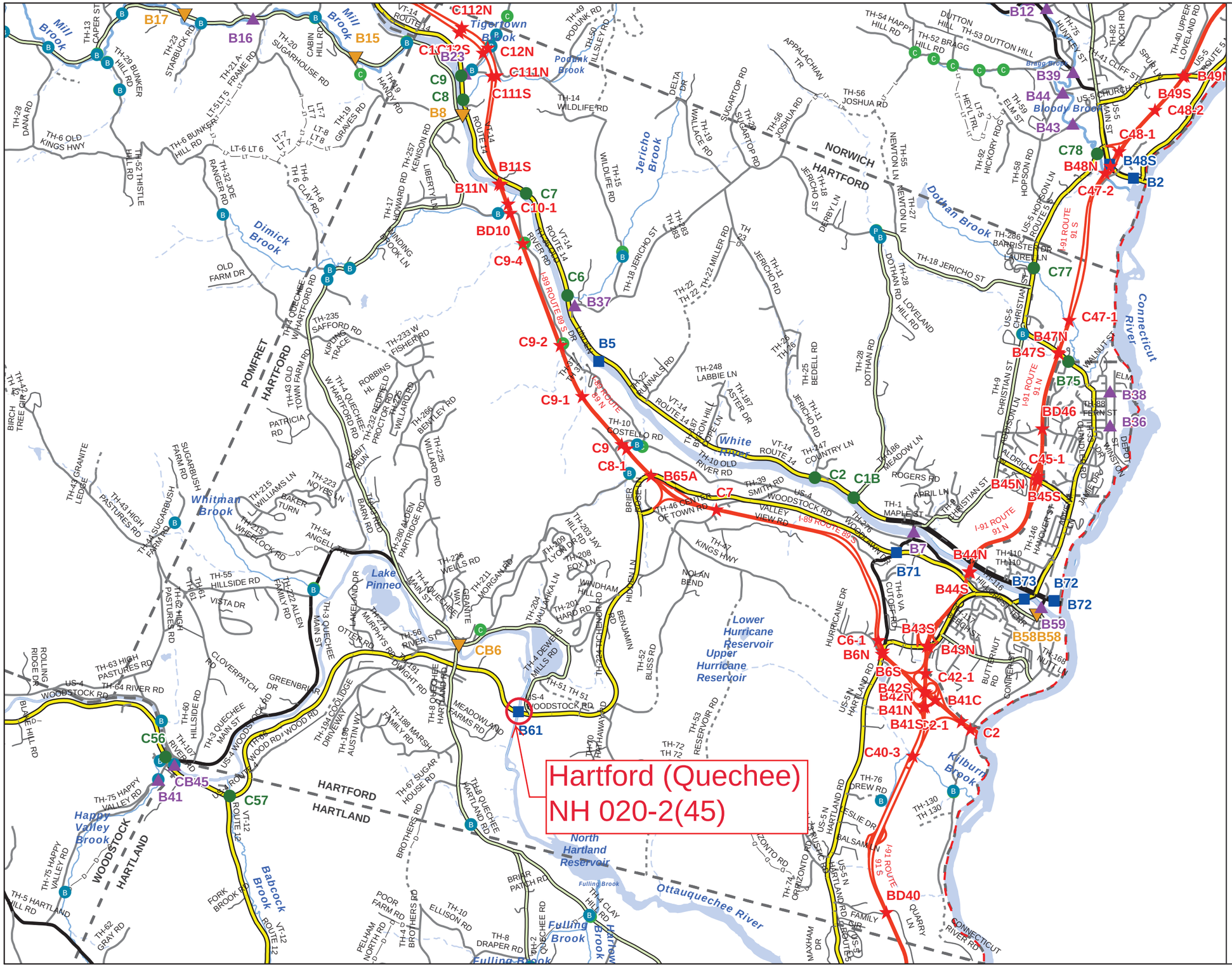
Hartford (Quechee)
NH 020-2(45)
Scale 1:52,675
N
INTERSTATE
STATE LONG
STATE SHORT
TOWN LONG
FAS/FAU
INTERSTATE
STATE HIGHWAY
CLASS 1
CLASS 2
CLASS 3
CLASS 4
LEGAL TRAIL
PRIVATE
DISCONTINUED
DISTRICT
POLITICAL BOUNDARY
NAMED RIVERS-STREAMS
UNNAMED RIVERS-STREAMS
VOBCIT Bridge Data
VOBCIT Culvert Data
Produced by:
Mapping Unit
Vermont Agency of Transportation
June 2014
HARTFORD
WINDSOR COUNTY
DISTRICT # 4
NORWICH
HARTFORD
POMFRET
HARTFORD
WOODSTOCK
HARTLAND
Mill Brook
Tigertown Brook
Podunk Brook
Jericho Brook
Dimick Brook
Dotham Brook
Bragg Brook
Bloody Brook
Connecticut River
White River
Whitman Brook
Lake Pinneo
Lower Hurricane Reservoir
Upper Hurricane Reservoir
North Hartland Reservoir
Happy Valley Brook
Babcock Brook
Fulling Brook
Ottauquechee River
Kilburn Brook
I-89 ROUTE 89 S
I-89 ROUTE 89 N
I-91 ROUTE 91 S
I-91 ROUTE 91 N
C112N
C12S
C12N
C111N
C111S
B23
C9
C8
B8
B11S
B11N
C7
C10-1
BD10
C9-4
C6
B37
C9-2
B5
C9-1
C9
C8-1
B65A
C7
C2
C1B
B7
B71
B44N
B44S
B73
B72
B72
B59
B58B58
B43S
B43N
C6-1
B6N
B6S
B42S
B42N
B41N
B41S
C42-1
B41C
C2-1
C2
C40-3
BD40
B45N
B45S
C45-1
B47N
B47S
BD46
C47-1
C47-2
B48N
B48S
B2
C48-1
C48-2
B49S
B49N
C78
C77
B75
B38
B36
B12
B39
B44
B43
B17
B16
B15
C56
CB45
B41
C57
CB6
B61

STRUCTURE INSPECTION, INVENTORY and APPRAISAL SHEET

Vermont Agency of Transportation ~ Structures Section ~ Bridge Management and Inspection Unit

Inspection Report for HARTFORD **bridge no.:** 00061 **District:** 4

Located on: US 00004 ML **over** OTTAUQUECHEE RIV **approximately** 3.6 MI E JCT. VT.12 S **Owner:** 01 STATE-OWNED

CONDITION

Deck Rating: 7 GOOD

Superstructure Rating: 5 FAIR

Substructure Rating: 6 SATISFACTORY

Channel Rating: 8 VERY GOOD

Culvert Rating: N NOT APPLICABLE

Federal Str. Number: 200020006114082

Federal Sufficiency Rating: 057

Deficiency Status of Structure: ND

AGE and SERVICE

Year Built: 1911 **Year Reconstructed:** 1989

Service On: 5 HIGHWAY-PEDESTRIAN

Service Under: 5 WATERWAY

Lanes On the Structure: 02

Lanes Under the Structure: 00

Bypass, Detour Length (miles): 13

ADT: 009400 **% Truck ADT:** 09

Year of ADT: 1998

GEOMETRIC DATA

Length of Maximum Span (ft): 0188

Structure Length (ft): 000285

Lt Curb/Sidewalk Width (ft): 4.2

Rt Curb/Sidewalk Width (ft): 4.2

Bridge Rdwy Width Curb-to-Curb (ft): 30

Deck Width Out-to-Out (ft): 41

Appr. Roadway Width (ft): 031

Skew: 00

Bridge Median: 0 NO MEDIAN

Min Vertical Clr Over (ft): 99 FT 99 IN

Feature Under: FEATURE NOT A HIGHWAY OR RAILROAD

Min Vertical Underclr (ft): 00 FT 00 IN

STRUCTURE TYPE and MATERIALS

Bridge Type: 3 HINGE STL DK ARCH

Number of Approach Spans 0002 **Number of Main Spans:** 001

Kind of Material and/or Design: 3 STEEL

Deck Structure Type: 1 CONCRETE CIP

Type of Wearing Surface: 6 BITUMINOUS

Type of Membrane 2 PREFORMED FABRIC

Deck Protection: 0 NONE

APPRAISAL *AS COMPARED TO FEDERAL STANDARDS

Bridge Railings: 1 MEETS CURRENT STANDARD

Transitions: 1 MEETS CURRENT STANDARD

Approach Guardrail 1 MEETS CURRENT STANDARD

Approach Guardrail Ends: 1 MEETS CURRENT STANDARD

Structural Evaluation: 5 BETTER THAN MINIMUM TOLERABLE CRITERIA

Deck Geometry: 4 MEETS MINIMUM TOLERABLE CRITERIA

Underclearances Vertical and Horizontal: N NOT APPLICABLE

Waterway Adequacy: 8 SLIGHT CHANCE OF OVERTOPPING ROADWAY

Approach Roadway Alignment: 8 EQUAL TO DESIRABLE CRITERIA

Scour Critical Bridges: 8 STABLE FOR SCOUR

DESIGN VEHICLE, RATING, and POSTING

Load Rating Method (Inv): 2 ALLOWABLE STRESS (AS)

Posting Status: A OPEN, NO RESTRICTION

Bridge Posting: 5 NO POSTING REQUIRED

Load Posting: 10 NO LOAD POSTING SIGNS ARE NEEDED

Posted Vehicle: POSTING NOT REQUIRED

Posted Weight (tons):

Design Load: 2 H 15

INSPECTION and CROSS REFERENCE

X-Ref. Route:

Insp. Date: 072017 **Insp. Freq. (months)** 24 **X-Ref. BrNum:**

INSPECTION SUMMARY and NEEDS

5/9/2017 (*Servi Lift Inspection 7/26/2017) A Joint replacement project should be considered, as well as repairs and replacement of deteriorated steel connection members (lateral bracing and gusset plates). The hinged areas at mid-span have significant surrounding pack rust in the gusset and connection plates, displacing the exterior of the steel plating as much as 2". The lattice bracing along the arch as well as lateral bracing beam members need to be repaired and or replaced. The riveted girder bearings should be replaced due to section loss and crushing that is visible at abutment 1. JW/SP

05/22/2015 - Bridge needs attention to address chronic deterioration issues. The Vermont expansion joints are quite poor and leak and have been repaired multiple times and need upgrading with consideration to possibly omitting the mid length joint. The steel superstructure needs strengthening measures and replacement of deteriorated components particularly gussets and lattice. The lattice between the built up arch members are very important to maintain rib alignment and need upgrading and or augmentation with stay plating. Warped and pried gussets at panel points and pins should be replaced. The entire structure needs extensive cleaning and repainting to deter further corrosion which is progressing. The eastern slope which has had chronic erosion of the shale ledge and old laid up stone remnants needs to be stabilized. Material has been dropping onto the bracing and hinge bearings in this location for years. Approach rail and southwest end bridge rail post needs replacement. ~ MJ/TB

Route: US4 **Bridge #: 61** **District: 4** **Date: 5/9/2017**

Town: Hartford **Inspection Type: Routine** **Inspectors: JW/SP**

Bridge Type: < > 3 Hinge Steel Deck Arch **Crossing: Ottauquechee River**

Approach ~

Rail: Galv. Standard Steel Beam and (2) Rail Tear Drop Alum. Impacted rail at the SW end over abutment 2 needs to be repaired.
Posts: Galv. Standard Steel I Beam and Alum. Standard I Beam Impacted rail at the SW end over abutment 2 needs to be repaired.
Settlement: None
Erosion: None

Deck ~

Wearing Surface: Asphalt Good condition with exception to areas surrounding the joints. These areas have spalling in the surrounding concrete w/ voids. **Depth: 4"**
Curb: < > Scattered small spalls w/ abrasion and some minor rust staining.
Sidewalks: < > Scattered transverse cracks w/ efflorescence staining throughout, and some minor settlement at the joints
Rail: < > and < > Quadruple aluminum tear drop w/ spindles and chain link pedestrian fence: Good condition
Posts: < > and < > Aluminum extruded posts: Some scattered scrape marks and gouges. The SW post at abutment 2 has significant spalling and exposed reinforcing in the surrounding fascia due to collision damage.
Joint Type: Vermont-Type and < > Surrounding concrete headers have heavy spalling and voids. Some plates are loose and there are impact gouges throughout.
Joint Trough: Steel Trough Galvanized troughs are in good condition
Drains: Galv. Downspout Drain for Exp. Joint Good condition
Fascia: < > Some minor scaling and spalling at the joint ends.
Deck Condition: RC Deck In good to satisfactory condition. Saturation in the surrounding areas of the joints continues w/ light staining and scaling.

Superstructure ~

Verticals/Diagonals: < > Scattered minor pitting.
Top Chords: < > Some scattered minor pitting. There is a 3" crack in the bottom angled bracket of the knee bracing, positioned between the top chord of the downstream girder and floor beam 1.
Bot. Chords: N/A
Gussets: < > Deep slotted pitting along the arch and interior areas located along lateral bracing plates.
Lateral Bracing: < > and < > The built up lateral bracing beam between verticals #2 (spanning the lower arch) has perforations and minimal section remaining at the lower connection ends, and lower angle has rotted out at mid-span. The lower lateral bracing connection plates at verticals #9 have perforations that will soon develop into slotted holes.
Floor beams: < > There is heavy rust scale and minor to moderate pitting in the ends of beam 6, due to the expansion joint above.
Stringers: Rolled Beams and < > There is scattered rust scale and pitting along the fascia stringers. Stringer ends have more moderate section loss located under the mid span expansion joint. The downstream fascia stringer (in the abutment 1 span) has a 1.5" vertical crack that stems from the corner of the floor beam seat. There is no change in the cracked weld of the angled beam seat at stringer 7 in the abutment 1 span.
Paint: Moderate Paint distress/Rusting Overall
Bearing Type: Rockers and Sliding The pedestal rockers of the pined deck arch have heavy rust scale and deep pitting surrounding the pinned connections, and slotted pitting along the gusset plate connections. The steel plates of the riveted girders at abutment 1 have heavy rust scale and areas of extensive section loss w/ crushing.
Arches: < > Cross bracing has deep pitting and heavy rust scale along flange connections. This section loss/pitting spreads down into the built up channels of the arch as well. Pack rust at the pin connections has displaced the surrounding gusset plates as much as 2". The exterior pin plates have 1" of displacement w/ deep pitting. The interior pin plates have 1.5" of displacement w/ extensive section loss.
Roof/Siding: N/A
Impact Damage: None
FCM Yes Comments: Lower arch chords

Substructure ~

End Walls: < > Areas of saturation and scattered cracking w/ light staining
Abut. 1 Seat/Stem: < > Some scattered cracking w/ minor saturation at the ends.
Abut. 2 Seat/Stem: < > Some scattered cracking w/ minor saturation at the ends.
Wingwalls: < > Map cracking w/ light staining
Footings: None
Undermining: None

Piers N/A - No Piers

Seat/Cap: < >
Shaft: < >
Columns: < >
Footings: < >
Undermining: < >

Channel ~ < >

General Condition: Good - No issues
Scour: None
Erosion: None
Debris: None
Protection: Ledge

Posted Loading @ Abut. 1: < > **Abut. 2: < >**

Multiple Posting Loads:

Posted Vertical Clearance:

Additional Signing or Restriction: < > < > < > < >

Sign damage if any:

Summary:

Date: 5/9/2017 **(*Servi Lift Inspection 7/26/2017) A Joint replacement project should be considered, as well as repairs and replacement of deteriorated steel connection members (lateral bracing and gusset plates). The hinged areas at mid-span have significant surrounding pack rust in the gusset and connection plates, displacing the exterior of the steel plating as much as 2". The lattice bracing along the arch as well as lateral bracing beam members need to be repaired and or replaced. The riveted girder bearings should be replaced due to section loss and crushing that is visible at abutment 1.** **Report by Team Leader: Justin White**	**Deck:**	**7**
	Superstructure:	**5**
	Substructure:	**6**
	Channel:	**8**
	Approach:	**8**
	Paint:	**5**

Clear Form

OFFICE MEMORANDUM

AOT - PDB - ENVIRONMENTAL SECTION

RESOURCE IDENTIFICATION COMPLETION MEMO

To:	Nick Wark, Laura Stone , Project Manager
From:	Lee Goldstein, Environmental Specialist
Date:	10/05/2017
Project:	**Hartford NH 020-2(45) Quechee BR 41, US Route 4**

Environmental Resources:

	Yes	No	
Archaeological Site:		X	See Archaeological Resource ID Memo:
Historic/Historic District:	X		See Historic Resource ID Memo: 08/17/2017 Bridge No. 61 is a historic resource; the Quechee State park is a Section 4(f) resource
4(f) Property:	X		Quechee State Park
Wetlands:		X	See Natural Resource ID Memo: 10/05/2017 not present at site
Agricultural Land:		X	
Fish & Wildlife Habitat:	X		Ottauquechee River, multiple resources
Wildlife Habitat Connectivity:	X		Very high rating for crossing at this site
Endangered Species:	X		NLEB Special Provisions language required for the Contract, and a hibernaculum located within 1 mile--will require survey; multiple natural community concerns within the site
Invasive Species:		X	Not ID'd
Stormwater:		X	
Landscaping:		X	
6(f) Property:		X	
Hazardous Waste:	X		not within the most likely APE
Contaminated Soils:		X	Not indicated within likely APE or nearby
USDA-Forest Service Lands:		X	However, Quechee State Park is adjacent--a 4(f) property

	Yes	No	
Scenic Highway/Byway:	X		The Crossroad of Vermont (US Route 4)
Act 250 Permits:	X		Adjacent
FEMA Floodplains:	X		Impacts unlikely
Flood Hazard Area/River Corridor:	X		Flood Hazard Area A
US Coast Guard:		X	
Lakes and Ponds:		X	
Environmental Justice:		X	
303D List/ Class A Water/ Outstanding Resource Water:		X	
Source Protection Area:		X	
Public Water Sources/ Private Wells:		X	
Other:	X		Stressed waters List for streams and rivers

CC: Project File

State of Vermont
Program Development Division
One National Life Drive
Montpelier, VT 05633-5001
vtrans.vermont.gov

[phone] 802-279-2562
[fax] 802-828-2334
[ttd] 800-253-0191

Agency of Transportation

To: Lee Goldstein, VTrans Environmental Specialist

From: James Brady, VTrans Environmental Biologist

Date: October 5, 2017
Subject: Hartford NH 020-2(45) - Natural Resource ID

I have completed my natural resource report for the above referenced project. My evaluation has included wetlands, wildlife habitat, agricultural soils, and rare, threatened and endangered species.

Wetlands/Watercourses
There are no wetlands within the project area.

The Ottauquechee River flows under the project area.

Wildlife Habitat
It is assumed that the Ottauquechee is a corridor for both terrestrial, avian and aquatic fish and wildlife. Due to the height of the bridge, it is not anticipated that work on the bridge will interrupt any movement.

The area directly south of the bridge is a mapped deer wintering area. Tree clearing should be avoided or minimized to the best extent practicable.

Rare, Threatened and Endangered Species
There are seven rare, threatened or endangered species mapped in the project area. These range from plants to bats and birds. Any tree clearing or access that will require the clearing of vegetation will require closer review due to the sensitive nature of the area surrounding the bridge.

This area is also within a one-mile radius of a known norther long-eared bad hibernaculum. This species is federally threatened and any work on the bridge will likely require time-of-year restrictions or exit surveys performed by a certified biologist. All tree clearing and bridge work must be reviewed by a VTrans biologist. There are several areas, mainly at the joints, that appear to be potential bat roosting habitat.

Agricultural Soils:
There are statewide agricultural soils adjacent to the project area.

VERMONT

Brennan Gauthier
VTrans Archaeologist
Vermont Agency of Transportation
Project Delivery Bureau
Environmental Section
1 National Life Drive
Montpelier, VT 05633
tel. 802-279-1460
Brennan.Gauthier@Vermont.gov

To: Lee Goldstein, VTrans Environmental Specialist
From: Brennan Gauthier, VTrans Senior Archaeologist
Date: 10/5/2017
Subject: Hartford NH 020-2(45) Bridge 61 Resource ID

Dear Lee,

I have completed my field inspection and background research for the currently unscoped project at Bridge 61 over Quechee Gorge in Hartford, Windsor County, Vermont. A similar resource identification for the same structure was completed in 2016 with a finding of no archaeological resources within a generalized area around Bridge 61. As you may remember, this bridge was constructed as part of the Woodstock Railroad which ran through here in the early 20th century. Once the tracks were removed, the Vermont Highway Department constructed US Route 4 along the same footprint. Heavy blasting and earth removal were incorporated into the construction during the initial railway build, and the entirety of all four project quadrants show evidence of heavy disturbance.

Sincerely,

Brennan

VTrans Working to Get You There
Vermont Agency of Transportation

VERMONT

Kyle Obenauer
Historic Preservation Specialist

Vermont Agency of Transportation

kyle.obenauer@vermont.gov
802.279.7040
www.vtrans.vermont.gov

Project Delivery Bureau - Environmental Section
One National Life Drive
Montpelier, VT 05633-5001

Historic Preservation Resource Identification Memo

To: Lee Goldstein, Environmental Specialist
Via: Judith Ehrlich, VTrans Historic Preservation Officer
Cc: Brennan Gauthier, VTrans Archaeologist
Karen Spooner, Administrative Assistant
Date: August 17, 2017

Subject: Hartford (Quechee) NH 020-2(45)

Lee,

I have completed a resource identification (ID) for Hartford (Quechee) NH 020-2(45). Bridge No. 61, the Quechee Gorge Bridge, is the only historic resource identified within a likely project near this structure. Additionally, I have identified one Section 4(f) property type within a likely project area: the Quechee State Park. Both resources have been mapped in ArcMap (Figures 1-2).

In October 2016, I completed a similar resource ID for the US 4 – Quechee Gorge Bridge Suicide Prevention Study. This document is contained within the January 2017, report to the legislature at: http://vtrans.vermont.gov/sites/aot/files/planning/documents/planning/QGB-SafetyIssues_FinalReport.pdf

Bridge No. 61, the Quechee Gorge Bridge

Constructed in 1911, Bridge No. 61 was designed for the former Woodstock Railroad by John W. Storrs. Fabricated by the American Bridge Company, this arched tri-span, parabolic spandrel-braced steel Pratt truss measures 285 feet long by 41 feet wide and carries US Route 4 approximately, 163 feet above the Ottauquechee River in Quechee Village, Hartford, Windsor County, Vermont.

The Quechee Gorge Bridge is individually listed in the National Register of Historic Places (NRHP) for its significance under Criteria A and C, as a distinct property type that meets the eligibility registration requirements contained within the 1990 *Metal Truss, Masonry, and Concrete Bridges in Vermont* multiple property documentation form.

As the 1990 NRHP nomination form notes:

> The bridge [Bridge No. 61] was built in 1911, to carry the tracks of the Woodstock Railroad over the gorge and replaced an 1875 wooden truss bridge which was less suited for heavyweight, twentieth century locomotives. In 1933, the right of way was taken over for U.S. Route 4, and the bridge was converted for highway use. This procedure chiefly required adding stringers and a concrete deck to the system… At the time John W. Storrs designed this bridge, he was employed as a bridge engineer for the Boston and Maine Railroad. He also worked as an independent consultant for others including the Woodstock and Montpelier and Wells River Railroads. Around 1909, his son Edward, associated with him and by 1915 the firm, known as Storrs and Storrs, was doing a large business in northern New England…The Quechee Gorge bridge appears to be the largest and most sophisticated bridge Storrs designed.

Today, Bridge No. 61 is the largest steel arch truss bridge in Vermont. When the structure was converted to automobile use during the Great Depression, its deck was substantially altered, including the addition of a paved roadway and railings (Figures 4-5). However, these alterations did not substantially diminish the historic integrity of the Quechee Gorge Bridge and today, metal railings line both sidewalks at the inner and outer edges of this structure. The extant railings and fencing on the Quechee Gorge Bridge are not considered character defining features of this NRHP-listed structure (Figure 6).

The NRHP is the official list of the Nation's historic places worthy of preservation. Authorized by the National Historic Preservation Act of 1966, the National Park Service's National Register of Historic Places is part of a national program to coordinate and support public and private efforts to identify, evaluate, and protect America's historic and archaeological resources.

The U.S. Department of the Interior's National Park Service has issued a set of standards and concepts referred to as *The Secretary of the Interior's Standard*s, which provide guidance on maintaining, repairing, and replacing historic materials, as well as designing new additions and making alterations to historic resources. Essentially, these standards provide a framework for decision-making about work or changes to a historic property, and are codified in 36 CFR 67.

The *Secretary of the Interior's Standards for Rehabilitation* would be applicable to repairs, alterations, or additions to Bridge No. 61 and have been included as Appendix A.

Quechee State Park

Located at the southeastern, southwestern, and northwestern corners of Bridge No. 61, Quechee State Park is considered a Section 4(f) property type. Project-related impacts to this park should be avoided, if possible. Specifically, areas of the park designated as a recreation area, such as a campground, wildlife refuge, or historic site (Figure 11).

Dewey Building

At the northeastern corner of Bridge No. 61, is a one-story commercial building that is currently the location of Quechee Gorge Gifts & Sportswear (Figure 8). This building is not considered a historic resource under Section 106.

Constructed in 1946-47, this building was designed by the celebrated modernist architects Edgar Hayes(EH) and Margaret King(MK) Hunter to function as a retail outlet and restaurant for the Quechee-based Dewey Corporation, a large textile manufacturer located directly northwest of the Quechee Gorge Bridge and Dewey building, near Dewey's Pond (Figures 9-10).

The North Carolina-based NC Modernist notes that:

> The Hunters practiced in Hanover NH from 1945-1966, both teaching at Dartmouth and designing several buildings on that campus. They were featured in the 1950, 1953, and 1956 Architectural Record. In 1957, they hired Roy Banwell as an associate. Margaret Hunter was featured in the 1958 Time/Life Picture Cookbook for being "one of the few successful women architects." In 1966 they relocated to Raleigh primarily because the demand for architecture in VT and NH had faded. There was also difficulty finding contractors who could build modern design correctly. They left the NH practice to Roy Banwell. In Raleigh, Ted worked for Lyles Bissett Carlisle and Wolff and Peg taught at NCSU. After a time, Ted left the firm and the pair opened up shop as EH and MK Hunter AIA.

This modernist retail building has been significantly altered, including additions to its roof, main facade, fenestration, and the addition of a large, rectangular one-story ell at its rear. Although some original design elements are still legible from the building's exterior, VTrans has determined that the former Dewey Corporation building does not retain sufficient historic integrity for individual inclusion in the NRHP.

Please, contact me with any questions. Additional background information and documentation can be provided upon request.

Images & Illustrations

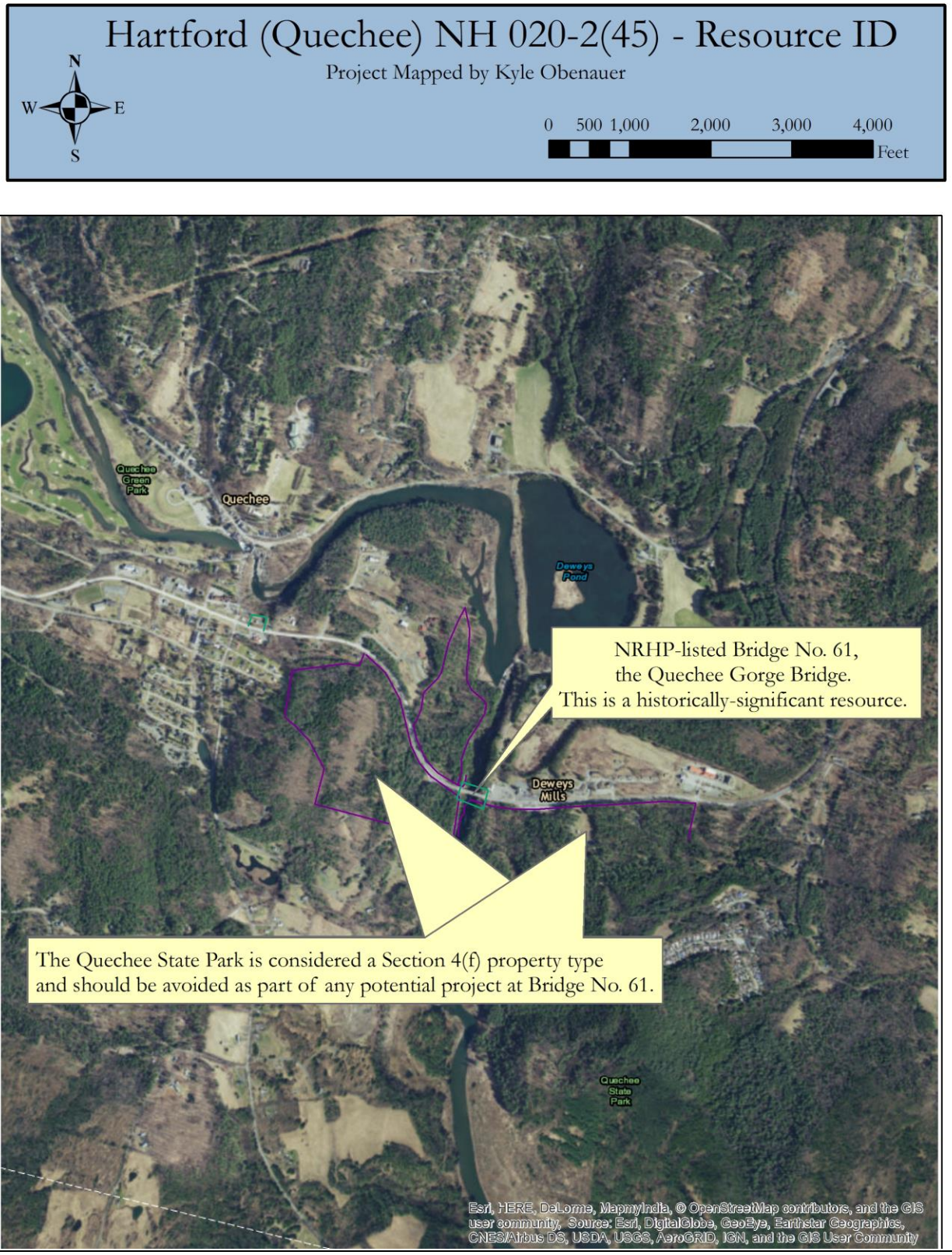

Figure 1. Historic and Section 4(f) Property Types within Likely Project Area at Bridge No. 61

Figure 2. Bridge No. 61, Quechee Gorge Bridge, looking south from the Ottauquechee River.

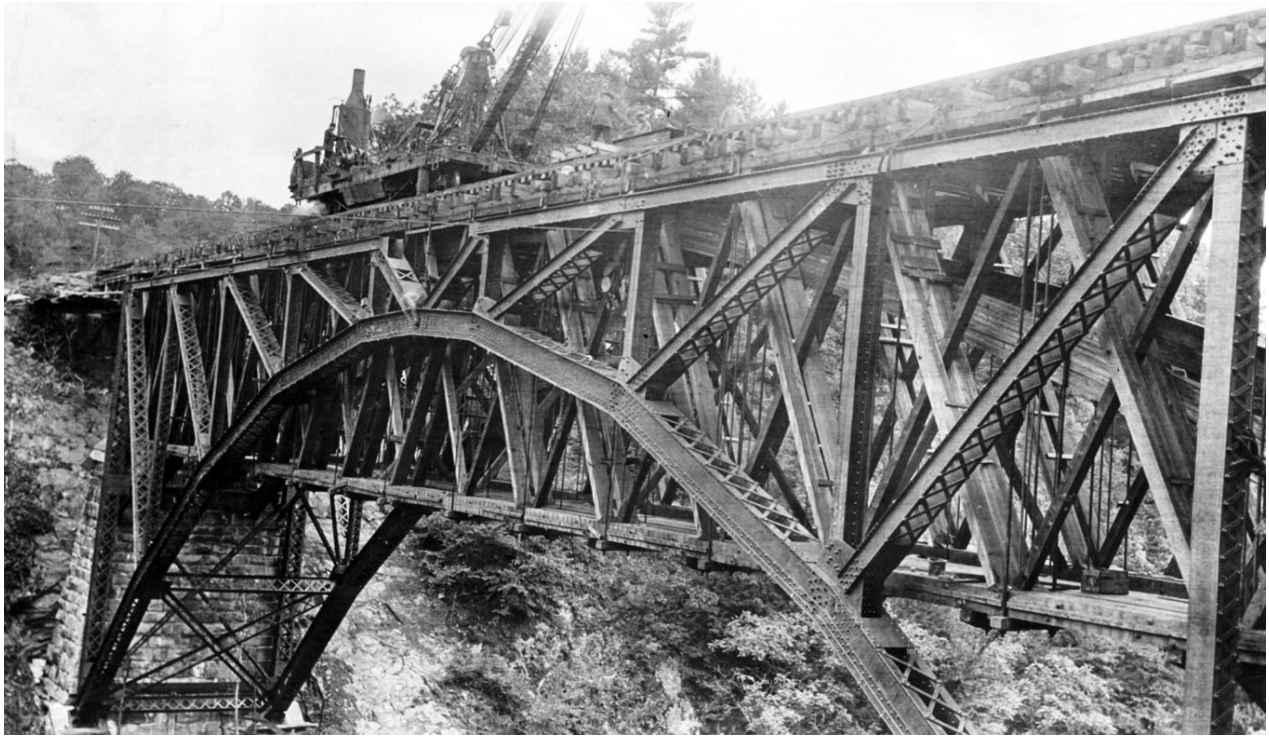

Figure 3. Construction of Bridge No. 61 in 1911.

Figure 4. Completed Bridge No. 61 in 1911. Note rail deck.

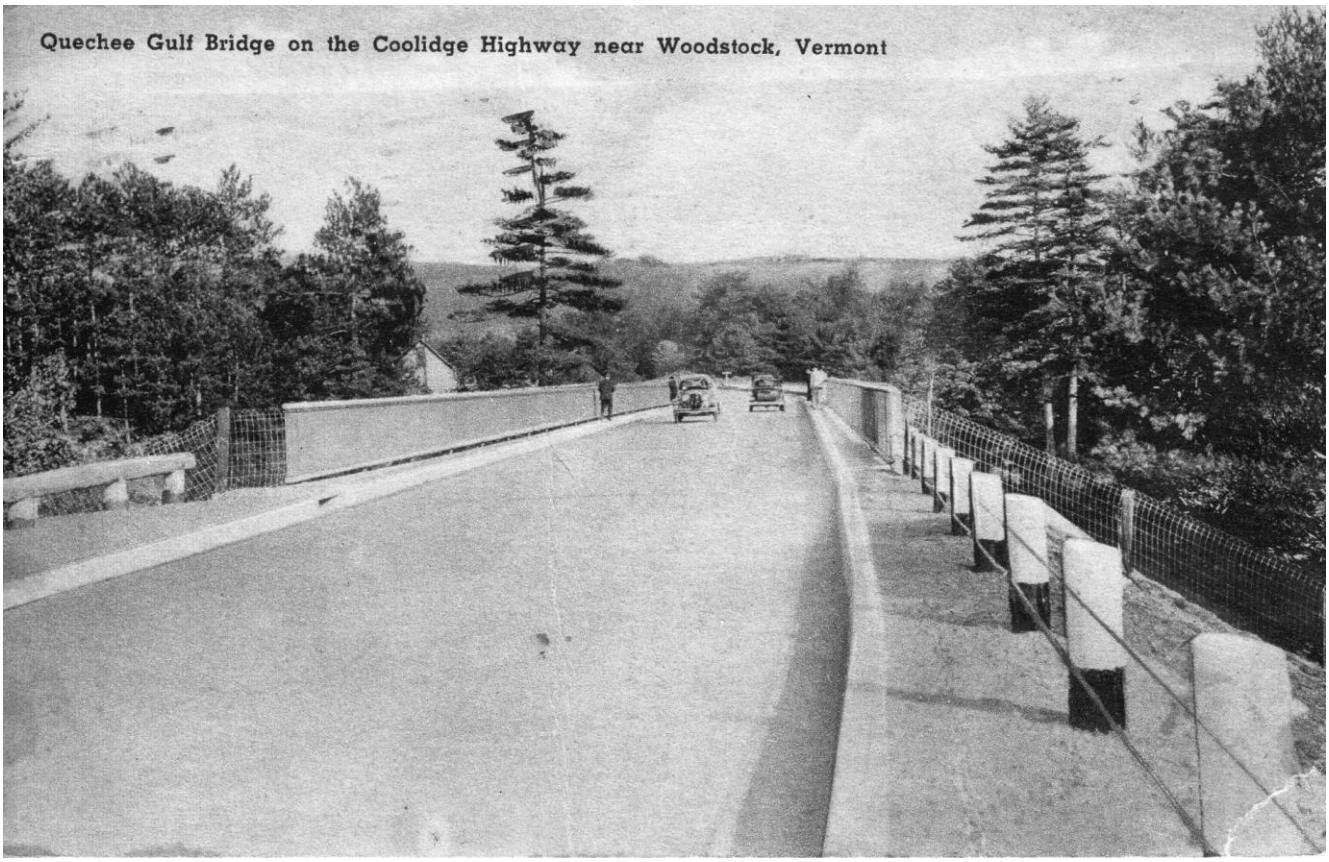

Figure 5. Alterations and new functions on deck of Bridge No. 61 in 1933, looking east on US Route 4. Note structure was referred to as Gulf Bridge at this period in its past.

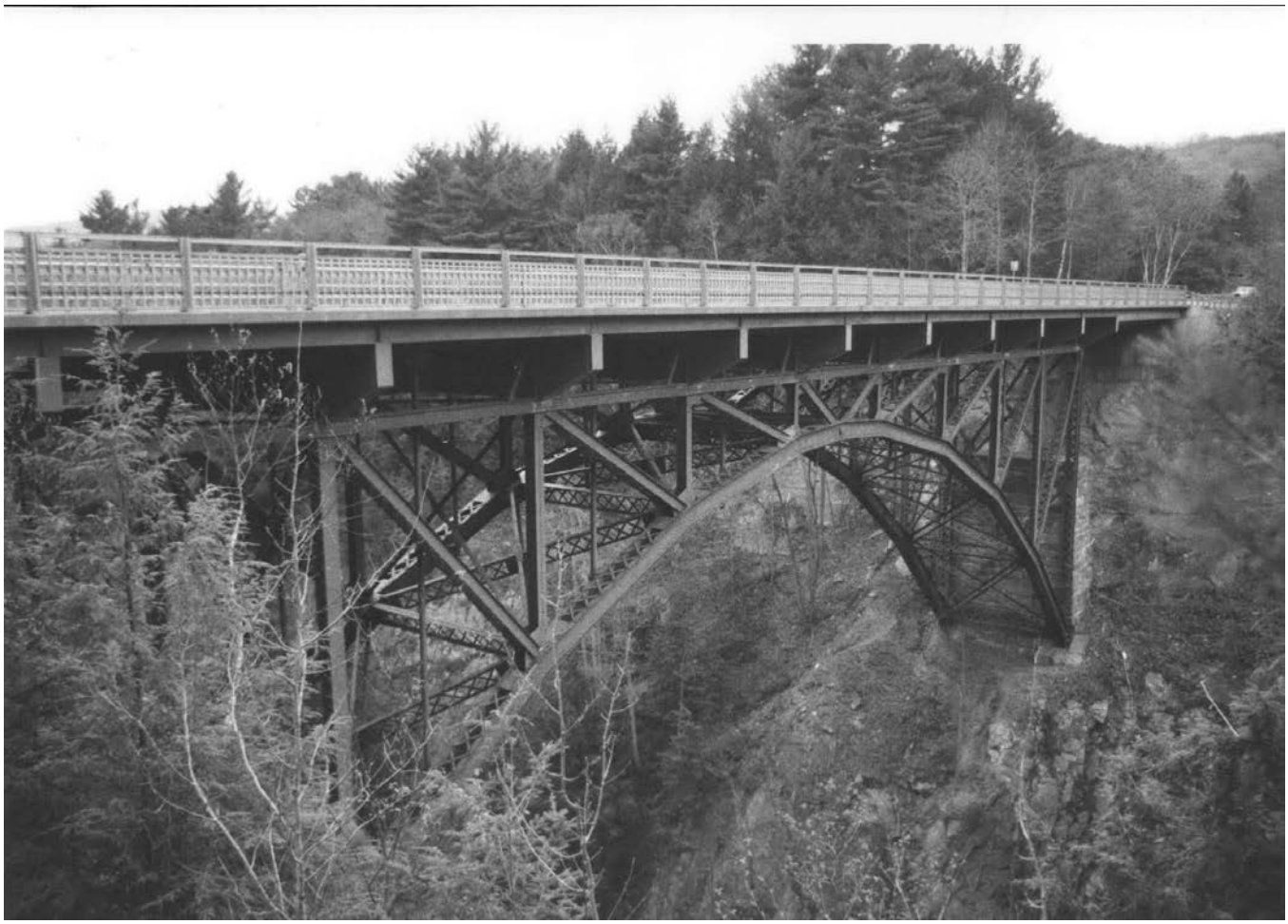

Figure 6. Bridge No. 61, looking northeast. Image from 1990 NRHP nomination.

Figure 7. Bridge No. 61 deck, looking west on US Route 4.

Figure 8. Quechee Gorge Gifts at northeastern corner of Bridge No. 61, former location of the Dewey Corporation's retail store and restaurant.

Figure 9. Building shortly after construction, in 1946-47.

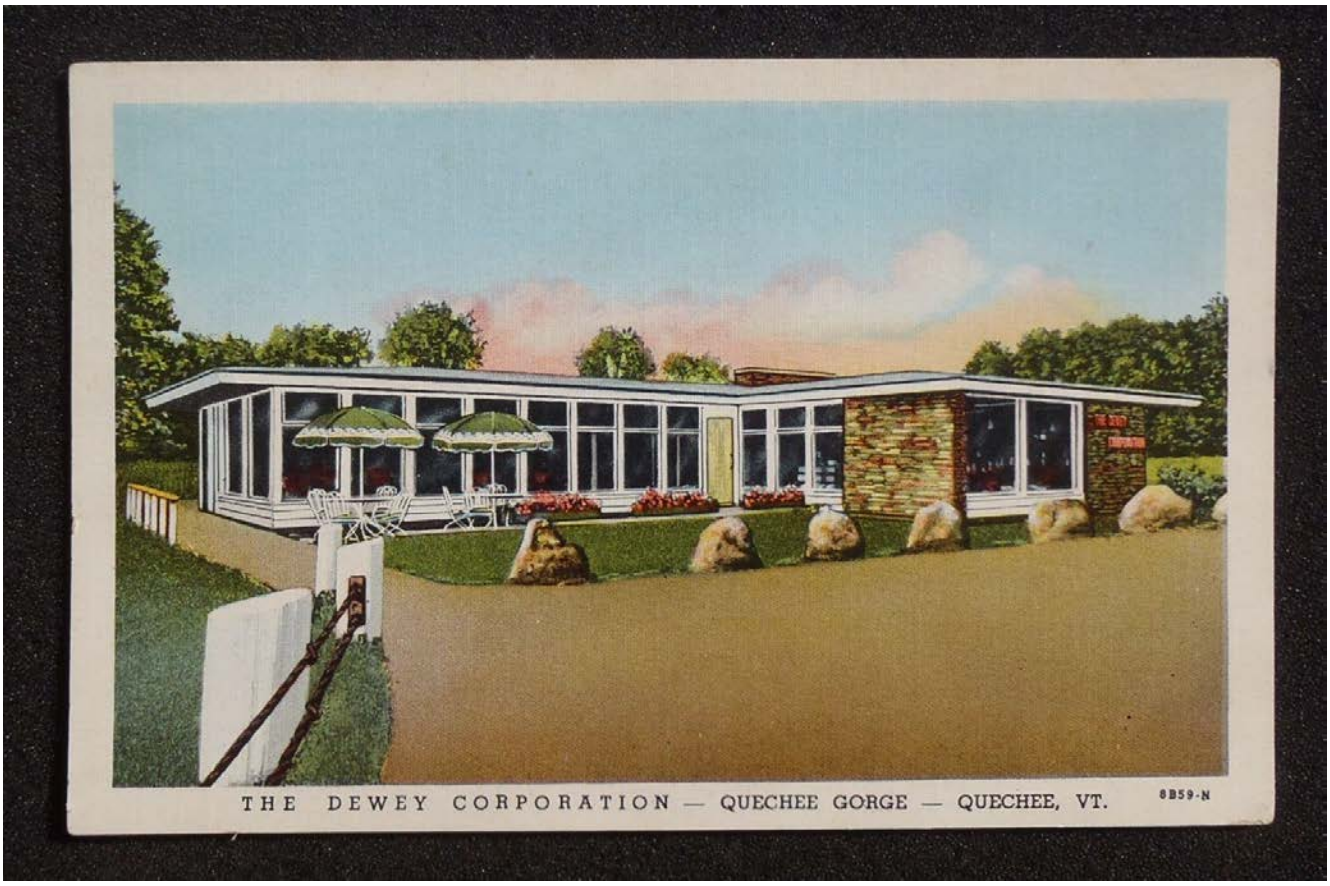

Figure 10. Dewy Corporation building on 1950s postcard.

Figure 11. Campsite at Quechee State Park, a Section 4(f) property type.

Appendix A

Secretary of the Interior's Standards for Rehabilitation

When repair and replacement of deteriorated features are necessary; when alterations or additions to the property are planned for a new or continued use; and when its depiction at a particular period of time is not appropriate, rehabilitation may be considered as a treatment.

Standards for Rehabilitation

1. A property will be used as it was historically or be given a new use that requires minimal change to its distinctive materials, features, spaces, and spatial relationships.
2. The historic character of a property will be retained and preserved. The removal of distinctive materials or alteration of features, spaces, and spatial relationships that characterize a property will be avoided.
3. Each property will be recognized as a physical record of its time, place, and use. Changes that create a false sense of historical development, such as adding conjectural features or elements from other historic properties, will not be undertaken.
4. Changes to a property that have acquired historic significance in their own right will be retained and preserved.
5. Distinctive materials, features, finishes, and construction techniques or examples of craftsmanship that characterize a property will be preserved.
6. Deteriorated historic features will be repaired rather than replaced. Where the severity of deterioration requires replacement of a distinctive feature, the new feature will match the old in design, color, texture, and, where possible, materials. Replacement of missing features will be substantiated by documentary and physical evidence.
7. Chemical or physical treatments, if appropriate, will be undertaken using the gentlest means possible. Treatments that cause damage to historic materials will not be used.
8. Archeological resources will be protected and preserved in place. If such resources must be disturbed, mitigation measures will be undertaken.
9. New additions, exterior alterations, or related new construction will not destroy historic materials, features, and spatial relationships that characterize the property. The new work will be differentiated from the old and will be compatible with the historic materials, features, size, scale and proportion, and massing to protect the integrity of the property and its environment.
10. New additions and adjacent or related new construction will be undertaken in such a manner that, if removed in the future, the essential form and integrity of the historic property and its environment would be unimpaired.

Vermont Agency of Transportation

General Yearly Summaries - Crash Listing: State Highways and All Federal Aid Highway Systems

From 01/01/12 To 12/31/16 General Yearly Summaries Information

THIS DOCUMENT IS EXEMPT FROM DISCOVERY OR ADMISSION UNDER 23 U.S.C. 409.

*	Reporting Agency/ Number	Town	Mile Marker	Date MM/DD/YY	Time	Weather	Contributing Circumstances	Direction Of Collision	Number Of Injuries	Number Of Fatalities	Number Of Untimely Deaths	Direction	Road Group
Route: US-4 Continued ...													
	VT0140300/15HF0 0394	Hartford	2.55	02/05/2015	13:39	Clear	Failed to yield right of way, Inattention, No improper driving	No Turns, Thru moves only, Broadside ^<	0	0	0		SH
	VT0140300/15HF0 1282	Hartford	2.59	04/23/2015	20:30	Clear	No improper driving	Single Vehicle Crash	0	0	0		SH
	VT0140300/14HF0 0071	Hartford	2.69	01/06/2014	17:26	Cloudy	No improper driving, Operating defective equipment	Opp Direction Sideswipe	0	0	0	E	SH
	VT0140300/13HF0 2349	Hartford	2.78	06/25/2013	16:32	Rain	No improper driving	No Turns, Thru moves only, Broadside ^<	0	0	0	W	SH
	VT0140300/12HF0 2172	Hartford	2.8	06/26/2012	21:10	Rain		Rear End	0	0	0	W	SH
	VT0140300/13HF0 2773	Hartford	3.12	07/24/2013	16:36	Clear	No improper driving	Single Vehicle Crash	2	0	0	E	SH
	VT0140300/15HF0 3240	Hartford	3.21	09/06/2015	10:23	Clear	No improper driving, Inattention, Other Outside Vehicle	Rear End	1	0	0		SH
	VT0140300/13HF0 3219	Hartford	3.23	08/20/2013	11:00	Clear	No improper driving, Inattention, Followed too closely	Rear End	1	0	0		SH
	VT0140300/12HF0 3182	Hartford	3.24	09/16/2012	18:03	Clear	Followed too closely, No improper driving	Rear End	0	0	0	W	SH
	VT0140300/12HF0 3686	Hartford	3.24	10/21/2012	16:15	Clear	Followed too closely, No improper driving	Rear End	0	0	0	W	SH
	VT0140300/13HF0 2787	Hartford	3.24	07/25/2013	14:49	Clear	Followed too closely, No improper driving	Rear End	0	0	0		SH
	VT0140300/13HF0 3732	Hartford	3.24	09/19/2013	12:26	Clear	Followed too closely, No improper driving	Rear End	0	0	0	W	SH
	VT0140300/13HF0 3894	Hartford	3.24	10/02/2013	09:15	Clear	No improper driving, Followed too closely, Inattention	Rear End	0	0	0	W	SH
	VT0140300/15HF0 1215	Hartford	3.24	04/18/2015	12:06	Clear	No improper driving, Followed too closely, Inattention	Rear End	0	0	0	W	SH
	VT0140300/15HF0 4224	Hartford	3.24	10/24/2015	16:29	Cloudy	Followed too closely, Unknown, No improper driving	Rear End	0	0	0	W	SH
	VT0140300/13HF0 2016	Hartford	3.25	06/05/2013	14:33	Clear	No improper driving, Followed too closely	Rear End	0	0	0	E	SH
	VT0140300/12HF0 2359	Hartford	3.26	07/10/2012	11:45	Clear	Followed too closely, Unknown	Rear End	0	0	0		SH
	VT0140300/13HF0 2518	Hartford	3.26	07/08/2013	14:45	Clear	No improper driving, Followed too closely	Rear End	1	0	0	E	SH
	VT0140300/13HF0 2063	Hartford	3.27	06/08/2013	09:54	Clear	Followed too closely, Inattention	Rear End	0	0	0	W	SH
	VT0140300/12HF0 0452	Hartford	3.28	02/10/2012	14:55	Cloudy	Driving too fast for conditions, Inattention, No improper driving	Rear End	0	0	0	W	SH
	VT0140300/12HF0 1200	Hartford	3.29	04/16/2012	16:13	Clear	No improper driving, Followed too closely	Rear End	0	0	0		SH
	VT0140300/14HF0 2047	Hartford	3.3	06/10/2014	18:05	Cloudy	Failed to yield right of way, Made an improper turn, No improper driving	Left Turn and Thru, Head On ^v--	0	0	0		SH
	VT0140300/15HF0 5367	Hartford	3.31	12/26/2015	10:50	Clear	Followed too closely, No improper driving	Rear End	1	0	0		SH
	VT0140300/12HF0 1990	Hartford	3.32	06/15/2012	18:26	Clear	Followed too closely, Visibility obstructed, No improper driving	Rear End	0	0	0		SH
	VT0140300/13HF0 2552	Hartford	3.32	07/10/2013	16:39	Clear	No improper driving, Driving too fast for conditions, Followed too closely	Rear End	0	0	0	E	SH
	VT0140300/13HF0 3569	Hartford	3.32	09/08/2013	13:14	Clear	Followed too closely, Inattention, No improper driving	Rear End	0	0	0	W	SH
	VT0140300/15HF0 0199	Hartford	3.32	01/19/2015	10:00	Snow		Opp Direction Sideswipe	0	0	0	E	SH
	VT0140300/14HF0 2072	Hartford	3.33	06/12/2014	12:10	Cloudy	Followed too closely, Inattention, No improper driving	Rear End	0	0	0		SH
	VT0140300/15HF0 3259	Hartford	3.34	09/07/2015	14:08	Clear	No improper driving, Driving too fast for conditions, Inattention	Rear End	0	0	0	W	SH

**Crash occurred prior to the last Highway Improvement Project. This data should not be used in a crash analysis. UNK indicates the Mile Marker is Unknown.*

Vermont Agency of Transportation

General Yearly Summaries - Crash Listing: State Highways and All Federal Aid Highway Systems

From 01/01/12 To 12/31/16 General Yearly Summaries Information

THIS DOCUMENT IS EXEMPT FROM DISCOVERY OR ADMISSION UNDER 23 U.S.C. 409.

*	Reporting Agency/ Number	Town	Mile Marker	Date MM/DD/YY	Time	Weather	Contributing Circumstances	Direction Of Collision	Number Of Injuries	Number Of Fatalities	Number Of Untimely Deaths	Direction	Road Group
Route: US-4 Continued ...													
	VT0140300/13HF02167	Hartford	3.35	06/15/2013	21:53	Clear	No improper driving	Single Vehicle Crash	0	0	0	E	SH
	VT0140300/13HF02852	Hartford	3.35	07/29/2013	11:56	Clear	No improper driving, Inattention	Rear End	0	0	0		SH
	VT0140300/14HF02791	Hartford	3.35	08/02/2014	16:35	Clear	Followed too closely, Inattention, No improper driving	Rear End	0	0	0	E	SH
	VT0140300/12HF00927	Hartford	3.37	03/24/2012	12:14				0	0	0		SH
	VT0140300/14HF03498	Hartford	3.37	09/27/2014	10:16	Clear	No improper driving, Followed too closely, Inattention	Rear End	1	0	0		SH
	VT0140300/15HF01666	Hartford	3.37	05/23/2015	13:32	Clear	Followed too closely, No improper driving	Rear End	0	0	0		SH
	VT0140300/15HF02680	Hartford	3.37	07/31/2015	14:04	Clear	Inattention, Followed too closely, No improper driving	Rear End	0	0	0	E	SH
	VT0140300/15HF03441	Hartford	3.37	09/15/2015	17:41	Clear	No improper driving, Not Distracted, Followed too closely, Inattention	Rear End	0	0	0	E	SH
	VT0140300/12HF03530	Hartford	3.38	10/10/2012	17:09	Rain	No improper driving, Inattention, Distracted	Rear End	0	0	0	E	SH
	VT0140300/15HF03994	Hartford	3.38	10/13/2015	18:19	Clear	No improper driving, Followed too closely, Inattention	Rear End	0	0	0	W	SH
	VT0140300/15HF01973	Hartford	3.39	06/13/2015	12:27	Clear	Followed too closely, No improper driving	Rear End	0	0	0		SH
	VT0140300/14HF01963	Hartford	3.4	06/05/2014	11:13	Clear	Followed too closely	Rear End	0	0	0		SH
	VT0140300/12HF02959	Hartford	3.45	08/24/2012	11:43	Clear	No improper driving, Inattention, Distracted	Rear End	1	0	0		SH
	VT0140300/12HF02004	Hartford	3.73	06/16/2012	13:15	Clear	No improper driving, Followed too closely, Inattention	Rear End	0	0	0		SH
	VT0140300/13HF03771	Hartford	3.76	09/22/2013	13:50	Clear	Followed too closely	Rear End	0	0	0	E	SH
	VT0140300/13HF03973	Hartford	3.76	10/06/2013	17:34	Rain	Inattention, No improper driving	Rear End	1	0	0	E	SH
	VT0140300/14HF01684	Hartford	3.76	05/18/2014	11:43	Clear	No improper driving, Followed too closely, Inattention	Rear End	1	0	0		SH
	VT0140300/12HF00018	Hartford	3.77	01/02/2012	11:46	Clear	Inattention, Followed too closely	Rear End	0	0	0		SH
	VT0140300/13HF00374	Hartford	3.77	02/04/2013	13:30	Clear	Failed to yield right of way, No improper driving	Left Turn and Thru, Same Direction Sideswipe/Angle Crash vv--	0	0	0	E	SH
	VT0140300/13HF04136	Hartford	3.77	10/18/2013	09:09	Cloudy	No improper driving	Rear End	0	0	0	E	SH
	VT0140300/15HF00517	Hartford	3.77	02/16/2015	12:32	Clear	Inattention, No improper driving	Rear End	0	0	0		SH
	VT0140300/12HF00639	Hartford	3.96	03/01/2012	12:10	Snow		Single Vehicle Crash	0	0	0	W	SH
	VT0140300/13HF01093	Hartford	3.96	04/06/2013	02:31	Clear	Swerving or avoiding due to wind, slippery surface, vehicle, object, non-motorist in roadway etc	Single Vehicle Crash	0	0	0	W	SH
	VT0140300/13HF04359	Hartford	3.96	11/08/2013	09:43	Clear	No improper driving	No Turns, Thru moves only, Broadside ^<	0	0	0	W	SH
	VT0140300/12HF04071	Hartford	3.97	11/23/2012	17:52	Cloudy	No improper driving	Head On	0	0	0	W	SH
	VT0140300/15HF01742	Hartford	3.98	05/29/2015	10:01	Clear	No improper driving	Single Vehicle Crash	0	0	0	E	SH
	VT0140300/12HF03261	Hartford	4	09/19/2012	12:58	Clear	Failure to keep in proper lane, Under the influence of medication/drugs/alcohol	Same Direction Sideswipe	1	0	0		SH
	VT0140300/15HF05034	Hartford	4.02	12/07/2015	11:26	Clear	No improper driving	Single Vehicle Crash	0	0	0	E	SH

**Crash occurred prior to the last Highway Improvement Project. This data should not be used in a crash analysis. UNK indicates the Mile Marker is Unknown.*

Vermont Agency of Transportation

Statewide Intersections - Route Log Order /2 - Statewide

Years: 2010 - 2014

H.C.L No.	/3.	Route	System	Town	Mileage	ADT	Years	Crashes	Fatalities	Injuries	PDO Crashes	Critical Rate	Actual Rate	Ratio Actual/Critical	Severity Index ($/Accident/1.)
	35	US-2, VT-78, TOWN ROAD 0004	Principal Arterial (r)	Alburgh	6.180 - 6.280	6205	5	12	0	5	8	0.718	1.059	1.475	$38,808
	8	US-2, I-89	Minor Arterial (u)	Colchester	1.830 - 2.030	11805	5	38	0	21	26	0.867	1.763	2.033	$49,692
	65	US-2, I-89	Principal Arterial (u)	Colchester	2.040 - 2.150	5360	5	16	0	6	11	1.282	1.635	1.276	$35,706
#	17	US-2, S PROSPECT ST., BURLINGTON, <T0000>	Principal Arterial (u)/Urban Collector (u)	Burlington	0.220 - 0.240	27040	5	73	0	18	62	0.83	1.479	1.781	$27,014
#	14	US-2, DORSET ST., SOUTH BURLINGTON	Principal Arterial (u)/Urban Collector (u)	South Burlington	0.490 - 0.500	40960	5	106	0	10	99	0.782	1.418	1.813	$15,756
#	56	US-2, WHITE ST., SOUTH BURLINGTON	Principal Arterial (u)/Urban Collector (u)	South Burlington	0.860 - 0.880	28990	5	57	0	9	49	0.821	1.077	1.311	$20,109
#	43	US-2, PATCHEN ROAD, SOUTH BURLINGTON, VT-116	Principal Arterial (u)/Urban Collector (u)	South Burlington	0.990 - 1.010	29890	5	61	0	5	58	0.817	1.118	1.367	$14,930
#	97	US-2, AIRPORT DRIVE, SOUTH BURLINGTON, SO. BURLINGTON (FAP 121-1 KENNEDY DRIVE)	Principal Arterial (u)/Minor Arterial (u)	South Burlington	1.880 - 1.910	27435	5	74	0	12	64	1.354	1.477	1.091	$20,492
*	78	US-2, INDUSTRIAL AVE., WILLISTON	Principal Arterial (u)/Urban Collector (u)	Williston	0.250 - 0.270	14910	5	29	0	3	27	0.917	1.065	1.161	$16,448
	72	US-2, VT-2A	Principal Arterial (u)/Minor Arterial (u)	Williston	1.420 - 1.440	26890	5	79	0	11	72	1.357	1.609	1.186	$19,097
	10	US-2, FAS 0209	Major Collector (r)	Richmond	2.690 - 2.770	9389	5	26	0	1	25	0.758	1.517	2	$11,592
	48	VT-2A, MARSHALL AVE., WILLISTON	Principal Arterial (u)/Urban Collector (u)	Williston	3.320 - 3.340	30820	5	61	0	6	56	0.814	1.084	1.332	$15,931
	42	VT-2A, INDUSTRIAL AVE., WILLISTON, MT. VIEW ROAD, WILLISTON	Minor Arterial (u)/Urban Collector (u)	Williston	4.780 - 4.800	21270	5	46	0	8	40	0.857	1.185	1.381	$21,461
	89	VT-2A, EAST ROAD, COLCHESTER, MILL POND ROAD, COLCHESTER	Minor Arterial (u)/Urban Collector (u)	Colchester	1.430 - 1.510	14475	5	27	0	7	20	0.917	1.022	1.114	$27,048
	102	US-4, FAS 0168	Principal Arterial (r)/Major Collector (r)	Hartford	3.310 - 3.390	10609	5	15	0	3	12	0.716	0.774	1.081	$22,900
	114	US-4, QUEECHE STATE HIGHWAY	Principal Arterial (r)	Hartford	5.780 - 5.940	12000	5	14	0	6	10	0.617	0.639	1.036	$40,171
	40	US-4, I-89	Principal Arterial (r)/Minor Arterial (r)	Hartford	6.430 - 6.590	6280	5	15	0	8	9	0.943	1.308	1.387	$47,420
	75	VT-4A, VT-30	Minor Arterial (r)/Major Collector (r)	Castleton	1.760 - 1.860	9970	5	21	0	6	15	0.983	1.154	1.173	$28,900
#	36	US-5, FAIRGROUND ROAD, BRATTLEBORO	Minor Arterial (u)/Urban Collector (u)	Brattleboro	1.130 - 1.150	10925	5	28	0	2	26	0.968	1.404	1.45	$13,900
#	106	US-5, FAIRVIEW AVE., BRATTLEBORO	Minor Arterial (u)/Urban Collector (u)	Brattleboro	1.210 - 1.230	10465	5	20	0	6	14	0.976	1.047	1.072	$29,900
#	80	US-5, BIRGE ST., BRATTLEBORO, <T0000>	Minor Arterial (u)/Urban Collector (u)	Brattleboro	1.650 - 1.680	11950	5	24	0	7	19	0.951	1.1	1.157	$30,058

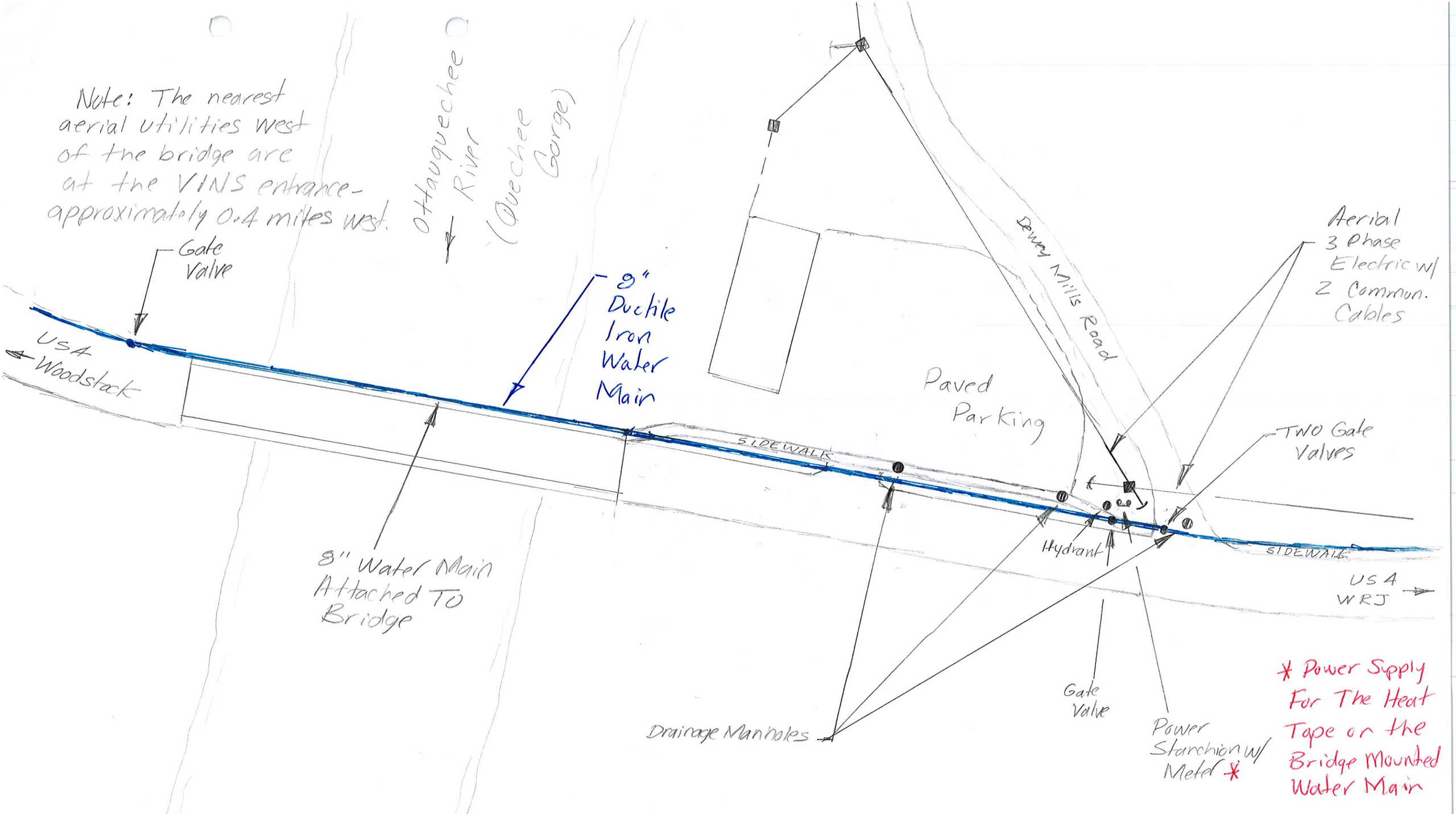

Hartford NH 020-2(45)
US Route 4 - Bridge #61
@ Quechee Gorge
US 4 MM STA. 3.244

Sketch Not To Scale

Bridge Scoping Project Hartford (Quechee) NH 020-2(45) Quechee Gorge
Operations Input Questionnaire

The Structures Section has begun the scoping process for Hartford (Quechee) NH 020-2(45), US Route 4 Bridge 61, over the Quechee Gorge (Ottauquechee River flows through the bottom of the gorge). This is a 3-Hinge Steel Deck Arch constructed in 1911. The Structure Inspection, Inventory, and Appraisal Sheet (attached) rates the deck as 7 (good), the superstructure as 5 (fair), and the substructures as 6 (satisfactory). We are interested in hearing your thoughts regarding the items listed below. Leave it blank if you don't wish to comment on a particular item. ***Please note that the Quechee Gorge Bridge has been identified as a "Forever Bridge". Due to the construction costs for a replacement of this high value structure along with its highly significant historic value, it is desired to develop a rigorous maintenance plan in order to keep this structure in service as long as possible. Additionally, suicide prevention measures will be included as part of all preventative maintenance options considered.***

1. Your thoughts on the general condition of this bridge and the general maintenance effort required to keep it in service.

   With its current configuration there are no concerns about the maintenance of the bridge; there are some concerns if some of the proposed changes are implemented, as noted below.

2. Your thoughts on additional general maintenance efforts needed for suicide prevention measures being considered (a steel baluster barrier versus a suicide prevention net).

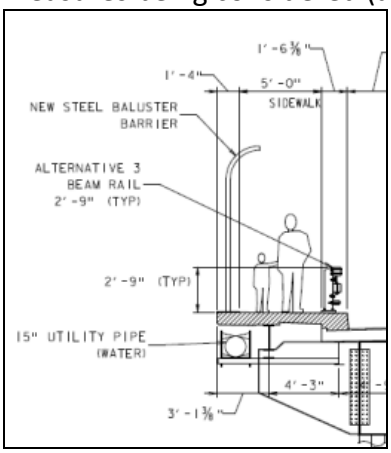

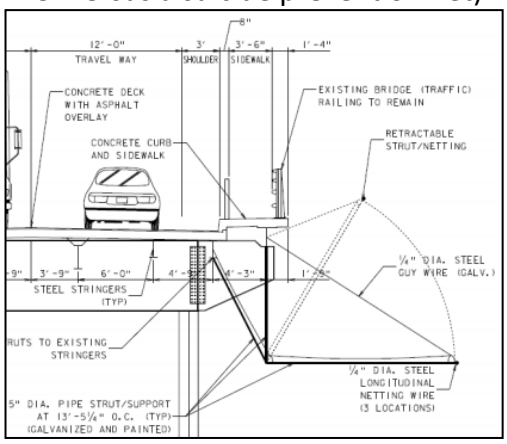

   The existing fencing separating the roadway from the sidewalk is removable and the district installs and removes it seasonally, as the town does not plow the sidewalk. Removal of the fence facilitates winter maintenance of the roadway as well as the sidewalk with the equipment available. AOT does not maintain sidewalks and is not equipped to do so. Therefore, from a maintenance perspective we have concerns with any permanent barrier, and if anything is permanently installed several things would need to be taken into consideration. 1.) the barrier would need to allow for snow to pass through lest it fall back into the roadway preventing proper clearing of snow from the bridge, possibly narrowing of the travel lane and/or creating a hazardous road condition. 2.) the town would need to make provisions for keeping the snow cleared from the sideway as any accumulation would result in pedestrians walking on top of the snow, resulting in not achieving required minimal rail height (distance from sidewalk to top of rail) if it were allowed to accumulate to any appreciable amount or not cleared following a storm

(as it must be kept in mind that the roadway snow will be plowed onto the sidewalk, this is unavoidable, so we are talking possible feet of snow versus inches of accumulation). Our concern would be that since the Town has no other sidewalk facilities within this vicinity that they would tend to only clear it after the storms, rather than routinely throughout the storm, this allowing the aforementioned situation of people walking on top of the banks, allowing for a possible accidental fall over the rail.

As for the suicide prevention barrier, I do not believe the local businesses would be in favor of anything that obstructs the scenic view from the bridge, or of the bridge itself. However, from a maintenance perspective whatever is installed needs to allow for the use of the service-lift truck which is our primary tool for both the annual bridge inspections as well as the washing of the bridge.

Of the two different options depicted, I would say that I would have maintenance concerns with the retractable netting option for several reasons. One reason being that anything with moving parts is yet another thing that would need to be maintained so they remained "movable". It must be kept in mind that this is a structure that is not only exposed to New England weather 365 days a year, but also has salt dumped on it for four to five months a year. This configuration requires very many attachments points under the bridge which will eventually lead to further maintenance needs many years in the future. I also feel that this netting will create an "attractive nuisance" in terms of tempting people to get out on the netting for 'photo-ops', selfies or just the thrill of it. I do not support the netting concept at all for many reasons; but if asked to speak to it strictly from a maintenance perspective, it would be more work to maintain than the "bolsters" supposing that the bolster would be likely constructed similar to an aluminum bridge rail which would not be so susceptible to rust and corrosion, and would not have moving parts and pieces. However, either of them is again of concern as to how we would be able to inspect and clean the bridge as either would be hard to "get around" with the service truck. Perhaps bolsters that could be detached and reattached could be a consideration so that maintenance could be performed.

3. Any comments on the geometry of the bridge (curve, sag, banking, sight distance)?

4. Do you feel the posted speed limit is appropriate?

   I do not know of speeding being an issue at this location, but you should check with local law enforcement. There are crosswalks on each end of the bridge and so during busy tourist seasons the traffic tends to have to slow to allow for pedestrian crossing.

5. Is the width adequate for snow plowing?

   As it is currently configured, and with the ability to remove the pedestrian fence during the winter there is sufficient width for plowing. This may be of concern depending on what, if anything is to change in regards to the pedestrian fencing / barrier.

6. Are the joints salvageable or would you recommend replacement?

   The existing joints need to be replaced, they have been a constant maintenance problem as of late, requiring the bridge crew to weld them on many occasions as of late. We believe there are three (3) current joints and they are all in need of work.

7. Are the railings constantly in need of repair or replacement? What type of railing works best for your district?

   I have not known of the bridge rail as it is currently configured to be an issue in terms of maintenance or repair, and being that it is behind the sidewalk it is not hit struck frequently nor easily damaged by winter maintenance.

8. Are you aware of any unpermitted driveways within the likely project limits? We frequently encounter driveways that prevent us from meeting railing standards and then discover them to be illegal.

   There are parking lots and/or business accesses on both ends of the bridge as well as an entrance to a visitor center on off the southeast corner.

9. Are you aware of abutting property owners that are likely to need special attention during the planning and construction phases? These could be people with disabilities, elderly, or simply folks who feel they have been unfairly treated in the past.

   Yes. There are several tourist driven businesses off the northeastern end of the bridge from whom I would expect that you can expect much consternation during the construction. There is a visitor's center off the southeastern end of the bridge and a campground east of that. There is a hiking trail under the bridge that I believe is part of, or associated with trails related to the Army Corps of Engineers and/or the Quechee State Park

10. Do you find that extra effort is required to keep the slopes and river banks around the bridge in a stable condition? Is there frequent flood damage that demands repair?

    Not that I recall, and if that thing ever washes out you better get in your ark and paddle!!

11. Does this bridge seem to pick up an unusual amount of debris from the waterway?

    See response #10 and also note that there is an Army Corps of Engineer dam upstream of the bridge, which keeps things pretty well flushed out!

12. Please describe any larger projects that you have completed that may not be reflected on the attached Appraisal sheet, such as deck patches, paving patches, railing replacement with new type, steel coating, etc.

    Routine pothole patching only if/as needed; as well as the aforementioned frequent welding of the bridge joints.

13. If there is a sidewalk on this bridge, how effective are the Town's efforts to keep it snow and ice free?

    Yes, there is sidewalk on the bridge and the town does NOT plow the sidewalks on the bridge, thus my earlier responses in regards to concerns about railing / barrier installation(s). If permanent fence is installed AOT will NOT be able to continue with its current practice.

14. Are there any drainage issues that we should address on this project?

    According to the area supervisor, "all of the joints need to be worked on, some are plugged and we cannot get them open and some are missing grates on top".

15. Are you aware of any complaints that the public has about issues that we can address on this project?

    While there is a vocal minority in favor of some sort of suicide prevention by way of fence or barrier, there is a great many who feel that this would have negatively impacts on the aesthetic of the bridge, the view from the bridge and the historical nature of the structure. I believe there are others oblivious to the issue currently who will create a public uproar when such measures are implemented, and the Agency needs to be prepared in advance to address that.

16. Anything else?

This project, Hartford (Quechee) NH 020-2(45), focuses on bridge 61 on US Route 4 in Hartford, Vermont over the Quechee Gorge. The Quechee Gorge Bridge has been identified as a "Forever Bridge" - due to the construction costs for a replacement of this high value structure along with its highly significant historic value, preservation of the existing bridge is desired to keep it in service as long as possible. A project addressing long term suicide prevention retrofits at the Bridge will also evaluate the bridge maintenance options that are needed. Potential options being considered for preventative maintenance include but are not limited to cleaning and painting the steel arch, replacement of deteriorated steel members, bridge joint repair or replacement, a deck membrane application, silane application to the substructures, widening of the existing sidewalks, and slope stabilization. All preventative maintenance options being considered will also include suicide mitigation considerations/retro fits as discussed in the "Quechee Gorge Bridge Safety Issues: Suicide Prevention Alternatives" report to the Vermont Legislature dated January 10, 2017. This report can be found at the following website for reference:
http://vtrans.vermont.gov/sites/aot/files/planning/documents/planning/QGB-SafetyIssues_FinalReport.pdf.

Community Considerations

1. Are there regularly scheduled public events in the community that will generate increased traffic (e.g. vehicular, bicycles and/or pedestrians), or may be difficult to stage if the bridge is closed during construction? Examples include annual bike races, festivals, parades, cultural events, weekly farmers market, concerts, etc. that could be impacted? If yes, please provide approximate date, location and event organizers' contact info.

   Quechee Balloon Festival – Father's Day weekend - http://www.quecheeballoonfestival.com/
   Summer/Foliage season with tour bus stops.

2. Is there a "slow season" or period of time from May through October where traffic is less or no events are scheduled?

   No. (Winter is the slow season)

3. Please describe the location of the Town garage, emergency responders (fire, police, ambulance) and emergency response routes that might be affected by the closure of the bridge, one-way traffic, or lane closures and provide contact information (names, address, email addresses, and phone numbers.

   Please see attached map.

4. Are there businesses (including agricultural operations and industrial parks) or delivery services (fuel or goods) that would be adversely impacted either by a detour or due to work zone proximity?

Yes. Businesses along Route 4 in vicinity from the bridge (especially the Quechee Gorge Gift Shop, Visitor Center, VINS, Pizza Chef, Quality Inn, The Public House, Quechee State Park, businesses in Quechee Village).

5. Are there important public buildings (town hall, community center, senior center, library) or community facilities (recreational fields, town green, etc.) close to the project?

   Quechee Gorge Visitor Center, Town of Hartford Wastewater Treatment Plan

6. Is there a local business association, chamber of commerce, regional development corporation, or other downtown group that we should be working with? If known, please provide name, organization, email, and phone number.

   Hartford Area Chamber of Commerce/Quechee Gorge Visitor Center - PJ Skehan, Executive Director pjskehan@hartfordvtchamber.com
   VINS - **Charles F. Rattigan,** Executive Director
   cfrattigan@vinsweb.org

7. Are there any public transit services or stops that use the bridge or transit routes in the vicinity that may be affected?
   Tour bus companies (unknown communications – maybe the Quechee Gorge Visitor Center knows), Vermont Translines (US Route 4 Rutland – WRJ), Thompson Senior Center (Woodstock) – Deanna Jones, Executive Director

Suicide Mitigation Measures – Design Considerations

1. Are there aesthetic considerations that we should be aware of?
   Yes. Visitors enjoy the unimpeded views of the Gorge.

2. Are there any other issues that are important for us to understand and consider?

   No.

   From Fire Chief Scott Cooney: The Hartford Fire Department utilizes a vertical hoist lift to access the floor of the gorge from the bridge deck. This hoist is mounted to one of our vehicles that is backed up to the sidewalk to allow the boom to extend over the railing. The boom allows us to lower rescue equipment up and down to the floor of the gorge. The ability to use this piece of equipment is necessary for this location.

Schools

1. Where are the schools in your community and what are their schedules?

   See map (Mid VT Christian School, Ottauquechee School and Upper Valley Waldorf School in Quechee). August to June.

2. Is this project on specific routes that school buses or students use to walk to and from school?

Yes

3. Are there recreational facilities associated with the schools nearby (other than at the school)?

   No.

Pedestrians and Bicyclists

1. What is the current level of bicycle and pedestrian use on the bridge?

   Moderate to high during May-Oct season.

2. Are the current lane and shoulder widths adequate for pedestrian and bicycle use?

   No. Narrow travel lanes – would benefit from shoulders in addition to the current sidewalks. During peak visitor season, pedestrian fences are installed to protect visitors from traffic.

3. Does the community feel there is a need for a sidewalk or bike lane on the bridge?

   Yes – sidewalk should remain and possibly add shoulders to travel lanes (also for ease of winter plowing).

4. Is pedestrian and bicycle traffic heavy enough that it should be accommodated during construction?

   Yes.

5. Does the Town have plans to construct either pedestrian or bicycle facilities leading up to the bridge? Please provide any planning documents demonstrating this (scoping study, master plan, corridor study, town or regional plan).

   Yes – scoping study for pedestrian facilities in Quechee. See attached study.

6. In the vicinity of the bridge, is there a land use pattern, existing generators of pedestrian and/or bicycle traffic, or zoning that will support development that is likely to lead to significant levels of walking and bicycling?

   Please see attached map of area.

Design Considerations

1. Are there any concerns with the alignment of the existing bridge? For example, if the bridge is located on a curve, has this created any problems that we should be aware of?

   No alignment issues.

2. Are there any concerns with the width of the existing bridge?

It would benefit with added shoulders.

3. Are there any special aesthetic considerations we should be aware of?
   No.

4. Are there any known Hazardous Material Sites near the project site?

   No.

5. Are there any known historic, archeological and/or other environmental resource issues near the project site?

   The Quechee State Park is adjacent. The Dewey Mills Dam above the Gorge.

6. Are there any utilities (water, sewer, communications, power) attached to the existing bridge? Please provide any available documentation.
   Waterline on the bridge.

7. Are there any existing, pending, or planned municipal utility projects (communications, lighting, drainage, water, wastewater, etc. near the project that should be considered?

   No.

8. Are there any other issues that are important for us to understand and consider?

   No.

Land Use & Zoning

1. Please provide a copy of your existing and future land use map or zoning map, if applicable.
   Please see attached land use and zoning map.

2. Are there any existing, pending or planned development proposal that would impact future transportation patterns near the bridge? If so, please explain.

   No.

3. Is there any planned expansion of public transit or intercity transit service in the project area? Please provide the name and contact information for the relevant public transit provider.

   No.

Communications

1. Please identify any local communication outlets that are available for us to use in communicating with the local population. Include weekly or daily newspapers, blogs, radio, public access TV, Facebook, Front Page Forum, etc. Also include any unconventional means such as local low-power FM.

   Valley News
   Hartford Chamber of Commerce
   Hartford Town Listserv
   Upper Valley Listserv
   Public Access TV – at a Selectboard meeting
   94.5 ESPN Radio
   106.7FM

2. Other than people/organizations already referenced in this questionnaire, are there any others who should be kept in the loop as the project moves forward?

   Stakeholders listed with the Quechee Gorge Study outreach
   Schools
   Mental health providers
   Local businesses along RT4 in vicinity of bridge (and in Quechee Village)
   Army Corps of Engineers (own land next to bridge)

Regional Truck Detour Route

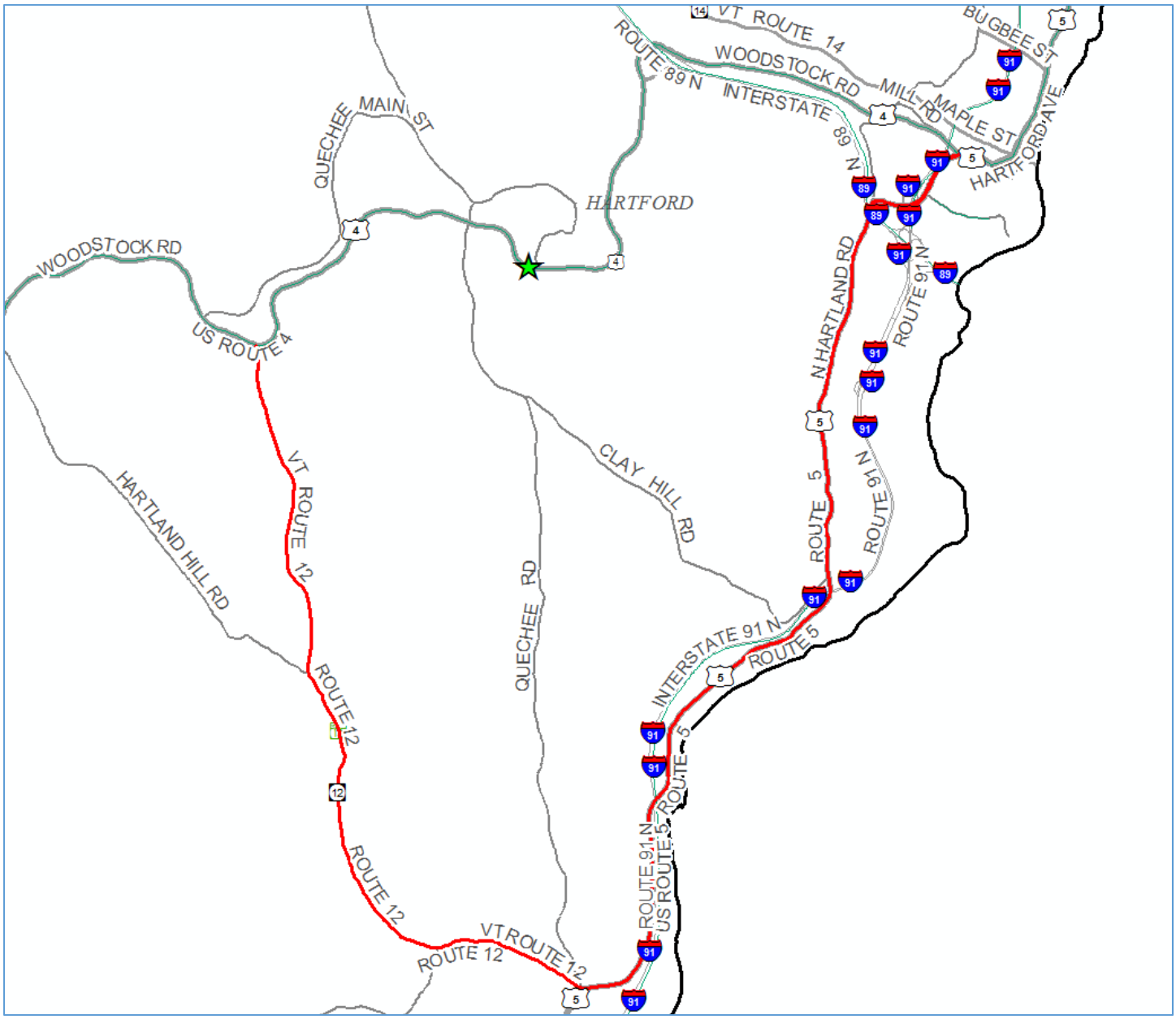

Detour Route: US Route 4, to US Route 5, and VT Route 12, back to US Route 4

- end-to-end distance: 26.8 miles
- through route travel distance: 9.6 miles
- detour travel distance: 17.2 miles
- added distance: 7.6 miles

Local Bypass

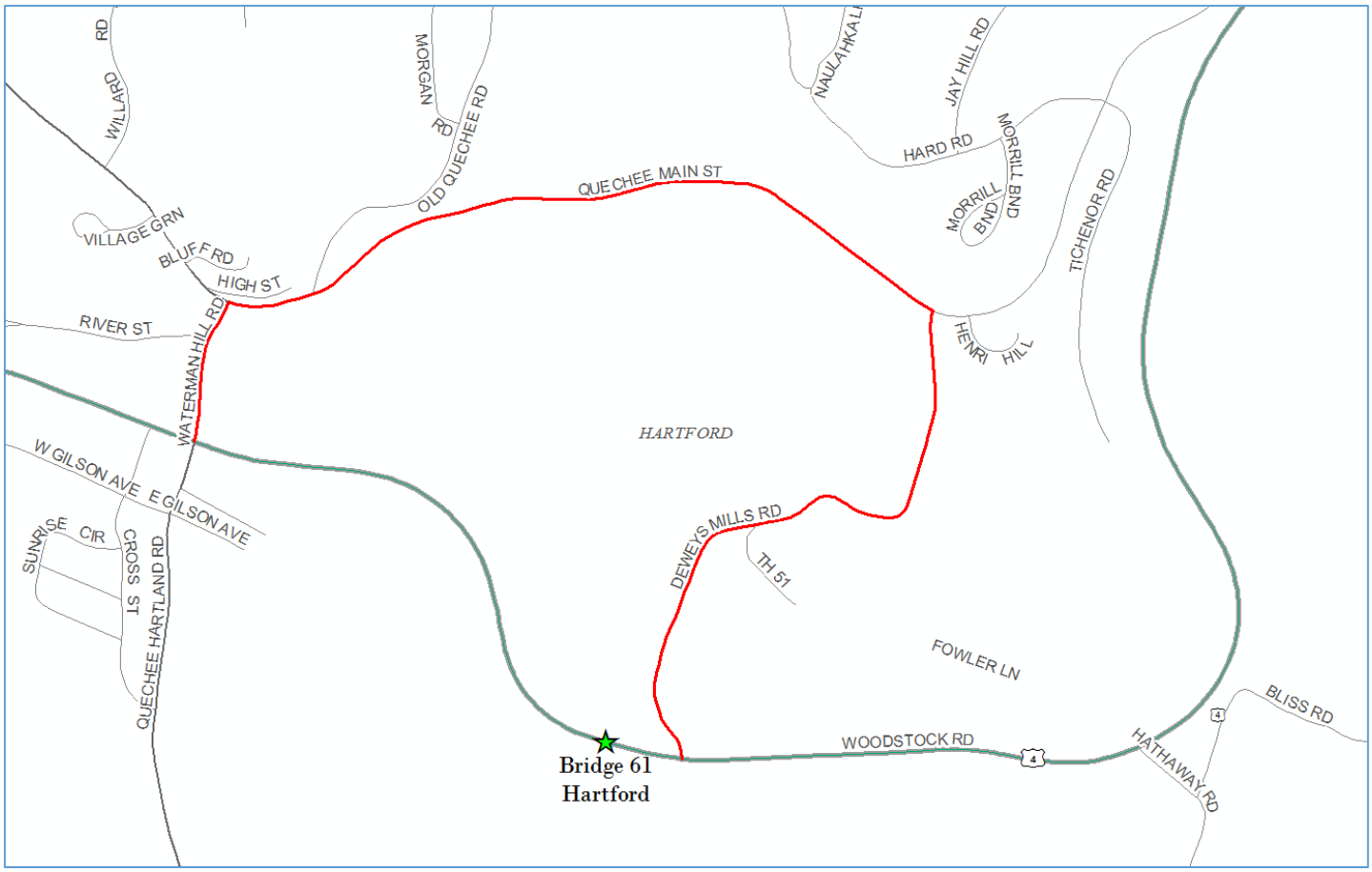

Bypass Route: US Route 4, to Deweys Mills Road, Quechee Main Street, and Waterman Hill Road, back to US Route 4

- end-to-end distance: 3.0 miles
- through route travel distance: 0.9 miles
- bypass travel distance: 2.1 miles
- added distance: 1.2 miles

This route is not appropriate for trucks since the Quechee Covered Bridge is located pm Waterman Hill Road.

STATE OF VERMONT
FOREST, PARKS & RECREATION

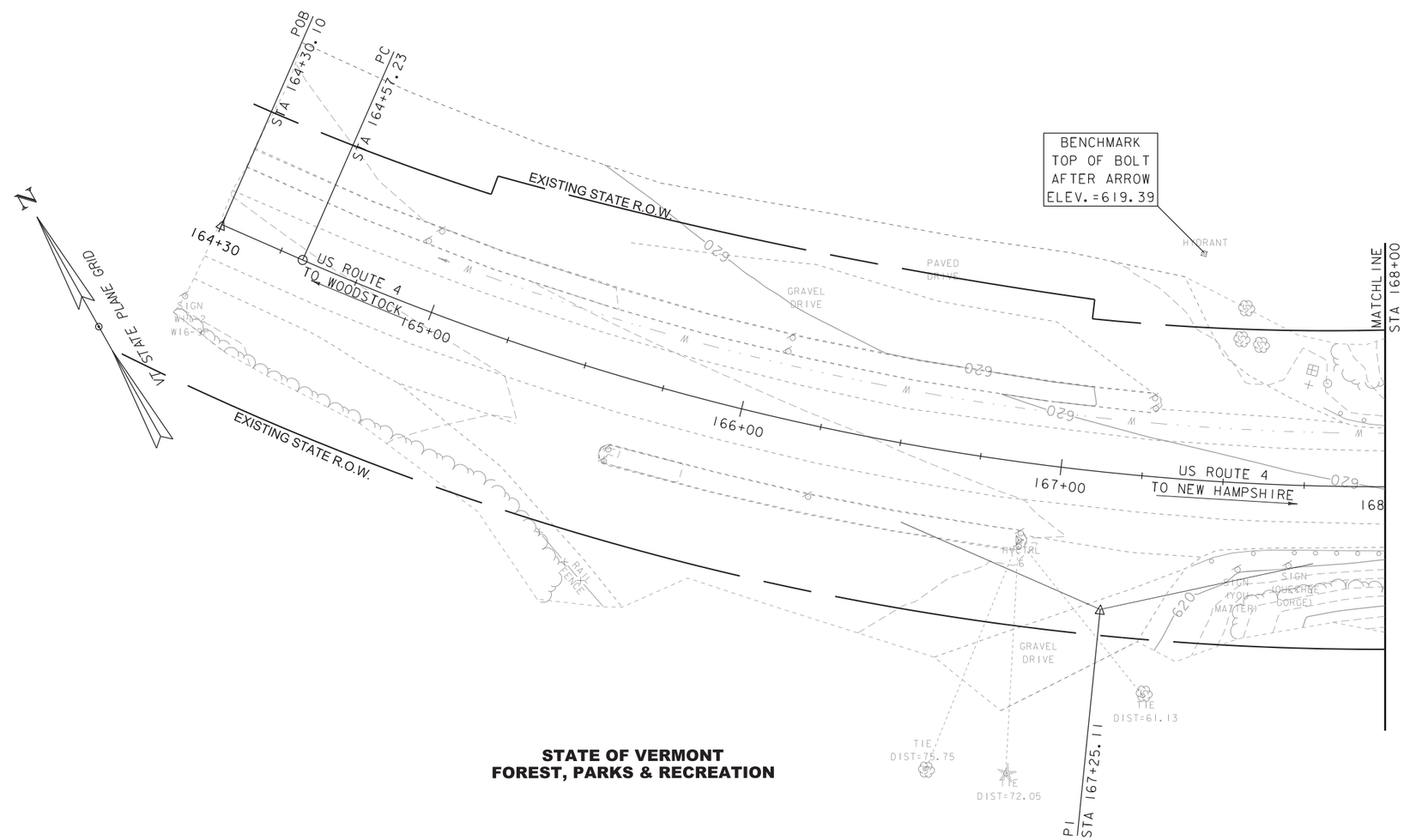

STATE OF VERMONT
FOREST, PARKS & RECREATION

EXISTING CURVE 1
DELTA = 35°46′30″
D = 6°54′11″
R = 830.00′
T = 267.88′
L = 518.24′
E = 42.16′

EXISTING CONDITIONS LAYOUT

SCALE 1" = 20′-0"
20 0 20

PROJECT NAME: HARTFORD (QUECHEE)	
PROJECT NUMBER: NH 020-2(45)	
FILE NAME: 17b082/sl7b082border.dgn	PLOT DATE: 19-JAN-2018
PROJECT LEADER: J.B.MCCARTHY	DRAWN BY: D.D.BEARD
DESIGNED BY: ------	CHECKED BY: ------
EXISTING CONDITIONS SHEET 1 OF 3	SHEET 1 OF 17

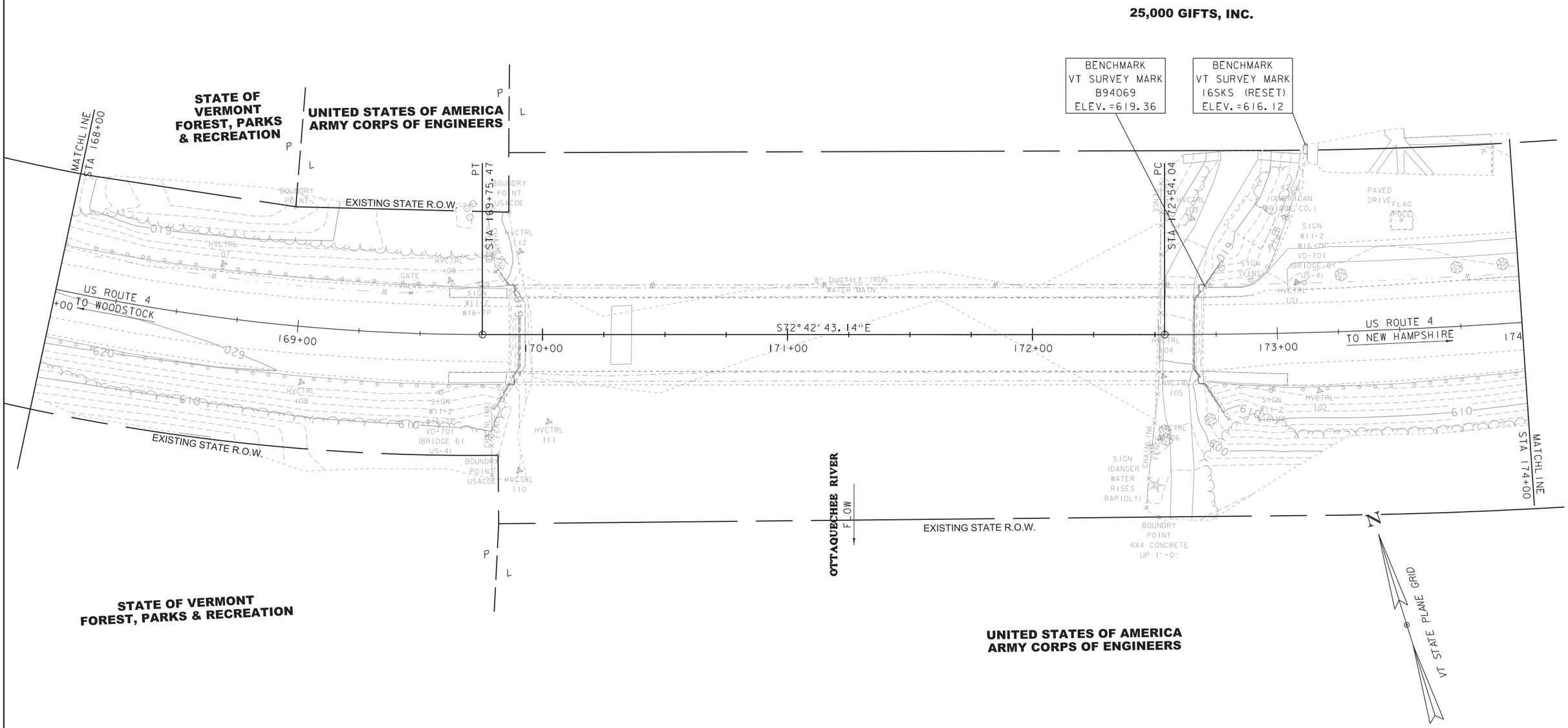

EXISTING BRIDGE INFORMATION
3 HINGE STEEL DECK ARCH
BUILT 1911, RECONSTRUCTED 1989
STRUCTURE LENGTH = 285'
MAXIMUM SPAN LENGTH = 188'

EXISTING CONDITIONS LAYOUT

SCALE 1" = 20'-0"
20 0 20

PROJECT NAME: HARTFORD (QUECHEE)	
PROJECT NUMBER: NH 020-2(45)	
FILE NAME: 17b082/sl7b082border.dgn	PLOT DATE: 19-JAN-2018
PROJECT LEADER: J.B.MCCARTHY	DRAWN BY: D.D.BEARD
DESIGNED BY: ------	CHECKED BY: ------
EXISTING CONDITIONS SHEET 2 OF 3	SHEET 2 OF 17

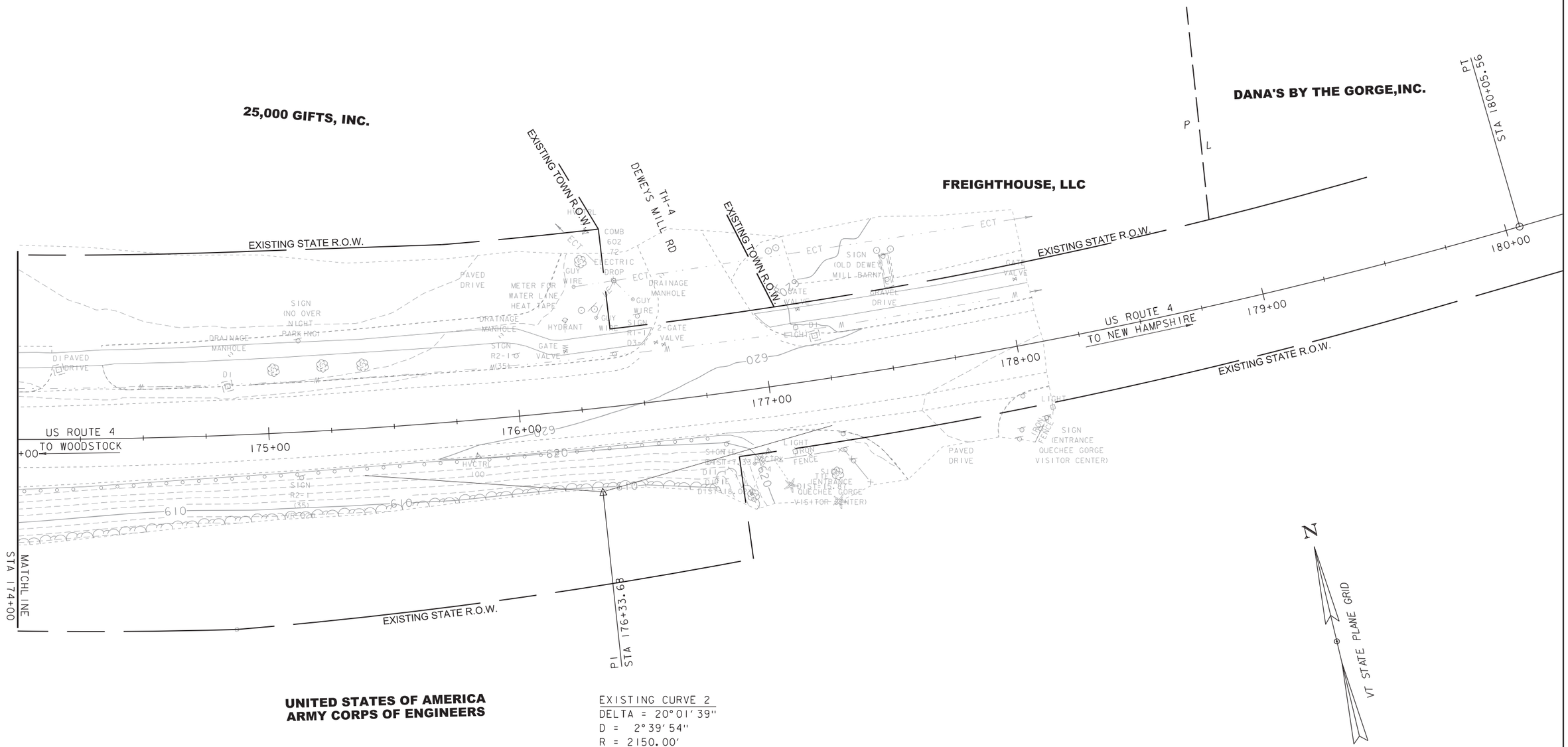

UNITED STATES OF AMERICA
ARMY CORPS OF ENGINEERS

EXISTING CURVE 2
DELTA = 20°01'39"
D = 2°39'54"
R = 2150.00'
T = 379.63'
L = 751.52'
E = 33.26'

EXISTING CONDITIONS LAYOUT

SCALE 1" = 20'-0"
20 0 20

PROJECT NAME: HARTFORD (QUECHEE)	
PROJECT NUMBER: NH 020-2(45)	
FILE NAME: 17b082/sl7b082border.dgn	PLOT DATE: 19-JAN-2018
PROJECT LEADER: J.B.MCCARTHY	DRAWN BY: D.D.BEARD
DESIGNED BY: ------	CHECKED BY: ------
EXISTING CONDITIONS SHEET 3 OF 3	SHEET 3 OF 17

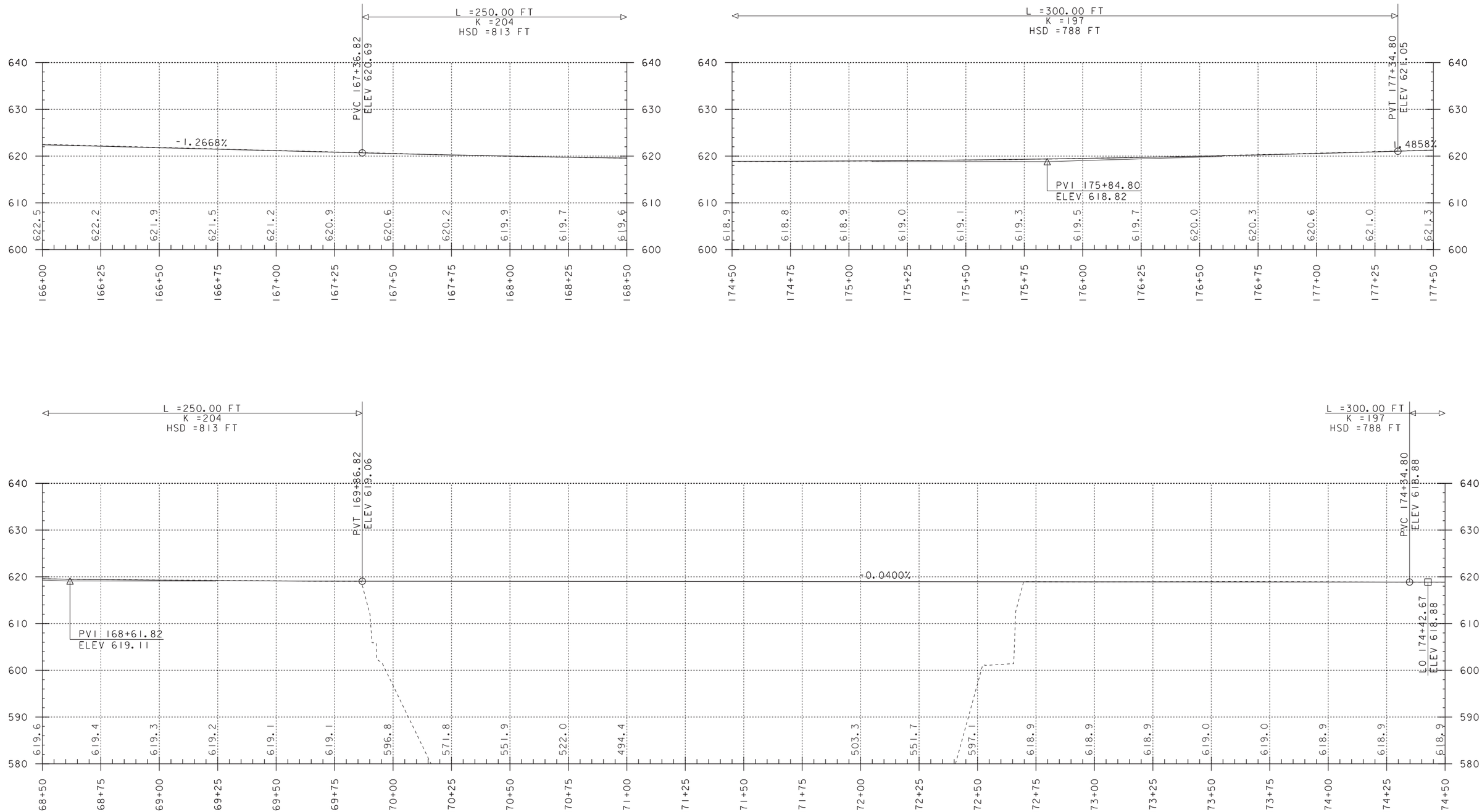

US ROUTE 4 PROFILE

SCALE: HORIZONTAL 1"=20'-0"
VERTICAL 1"=10'-0"

PROJECT NAME: HARTFORD (QUECHEE)	
PROJECT NUMBER: NH 020-2(45)	
FILE NAME: 17b082/sl7b082profile.dgn	PLOT DATE: 19-JAN-2018
PROJECT LEADER: J.B.MCCARTHY	DRAWN BY: D.D.BEARD
DESIGNED BY: ------	CHECKED BY: ------
PROFILE SHEET	SHEET 4 OF 17

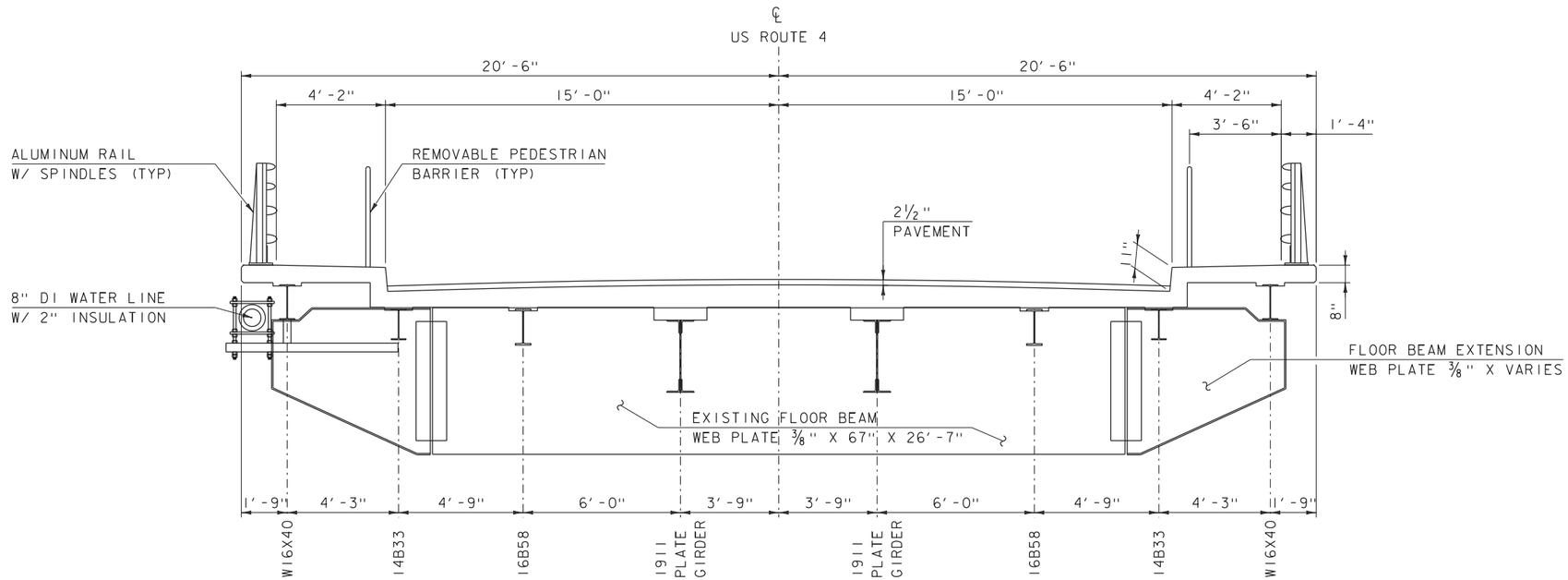

BRIDGE 61 MAIN SPAN TYPICAL SECTION

SCALE ⅜" = 1'-0"

FLOW

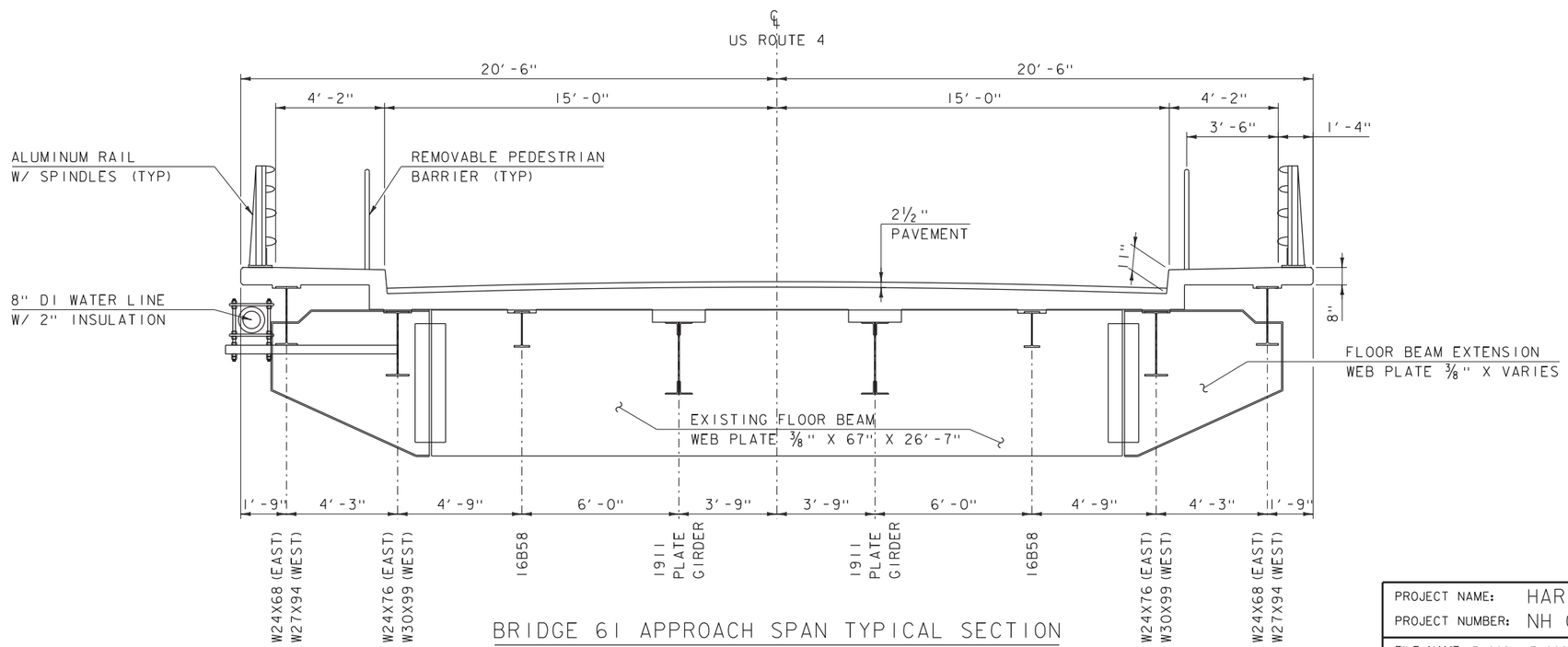

BRIDGE 61 APPROACH SPAN TYPICAL SECTION

SCALE ⅜" = 1'-0"

FLOW

PROJECT NAME: HARTFORD (QUECHEE)	
PROJECT NUMBER: NH 020-2(45)	
FILE NAME: 17b082/sl7b082typ.dgn	PLOT DATE: 19-JAN-2018
PROJECT LEADER: J.B.MCCARTHY	DRAWN BY: D.D.BEARD
DESIGNED BY: ------	CHECKED BY: ------
EXISTING TYPICAL SECTIONS	SHEET 5 OF 17

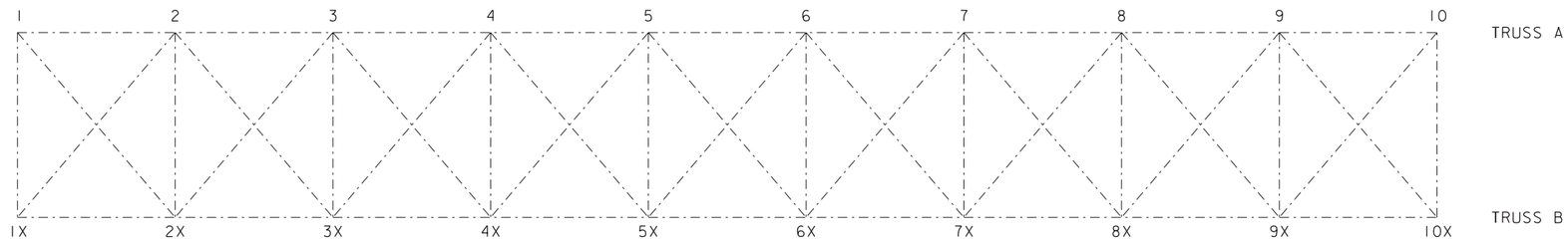

ARCH LAYOUT

SCALE 1' = 10' - 0"

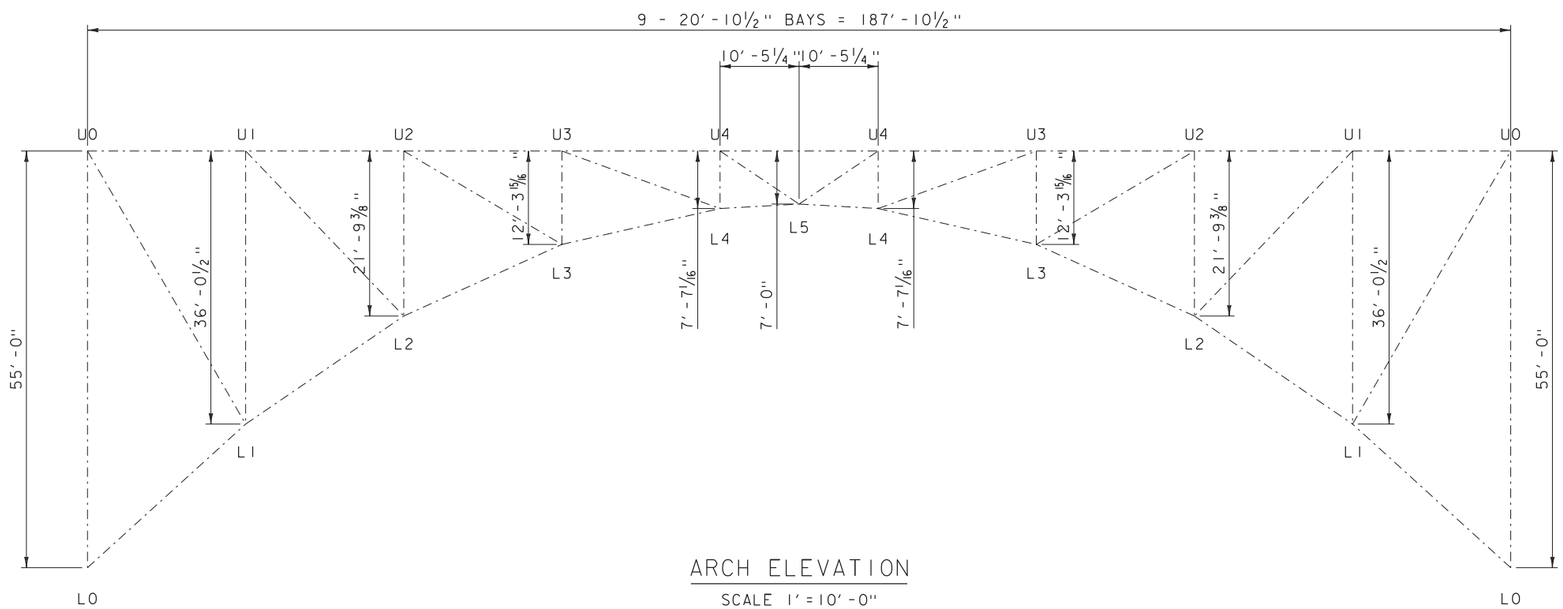

ARCH ELEVATION

SCALE 1' = 10' - 0"

PROJECT NAME: HARTFORD (QUECHEE GORGE)	
PROJECT NUMBER: NH 020-2(45)	
FILE NAME: 17b082/s17b082truss.dgn	PLOT DATE: 19-JAN-2018
PROJECT LEADER: J.B.MCCARTHY	DRAWN BY: D.D.BEARD
DESIGNED BY: L.J.STONE	CHECKED BY: L.J.STONE
TRUSS DETAIL SHEET	SHEET 6 OF 17

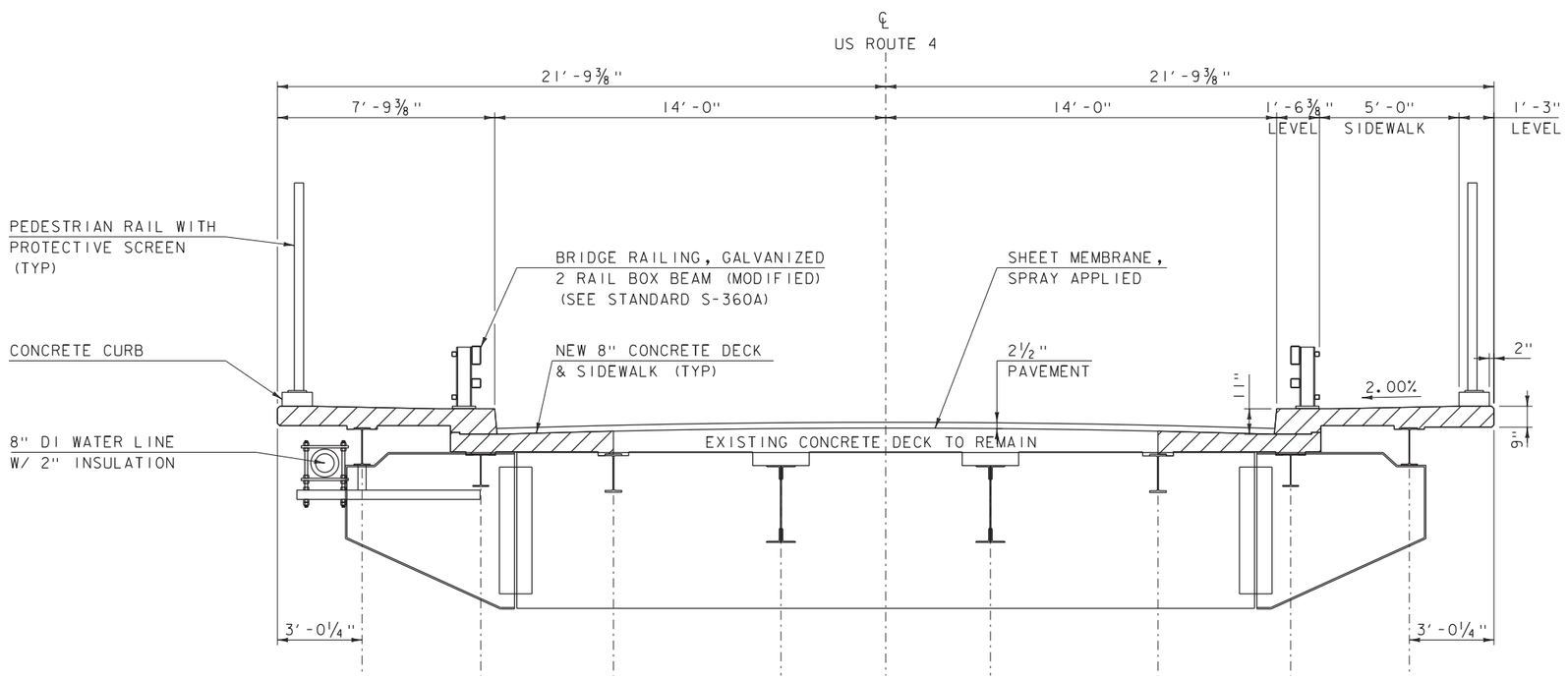

BRIDGE 61 PARTIAL DECK REPLACEMENT

SCALE 3/8" = 1'-0"

FLOW

PROJECT NAME:	HARTFORD (QUECHEE)
PROJECT NUMBER:	NH 020-2(45)

FILE NAME: 17b082/s17b082typ.dgn	PLOT DATE: 19-JAN-2018
PROJECT LEADER: J.B.MCCARTHY	DRAWN BY: D.D.BEARD
DESIGNED BY: L.J.STONE	CHECKED BY: L.J.STONE
PARTIAL DECK REPLACEMENT TYPICAL SECTION	SHEET 7 OF 17

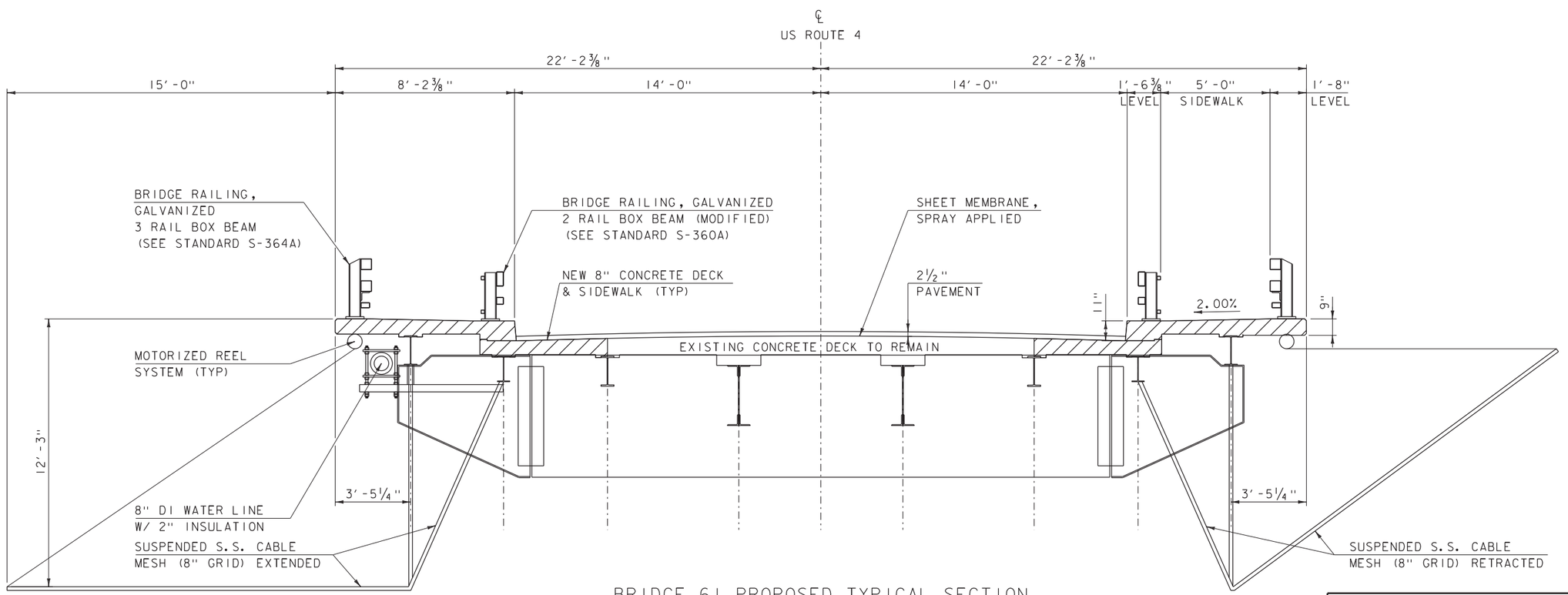

BRIDGE 61 PROPOSED TYPICAL SECTION

W/ NETTING

SCALE 3/8" = 1'-0"

FLOW

PROJECT NAME: HARTFORD (QUECHEE)	
PROJECT NUMBER: NH 020-2(45)	
FILE NAME: 17b082/s17b082typ.dgn	PLOT DATE: 19-JAN-2018
PROJECT LEADER: J.B.MCCARTHY	DRAWN BY: D.D.BEARD
DESIGNED BY: ------	CHECKED BY: ------
PROPOSED NETTING TYPICAL SECTION	SHEET 8 OF 17

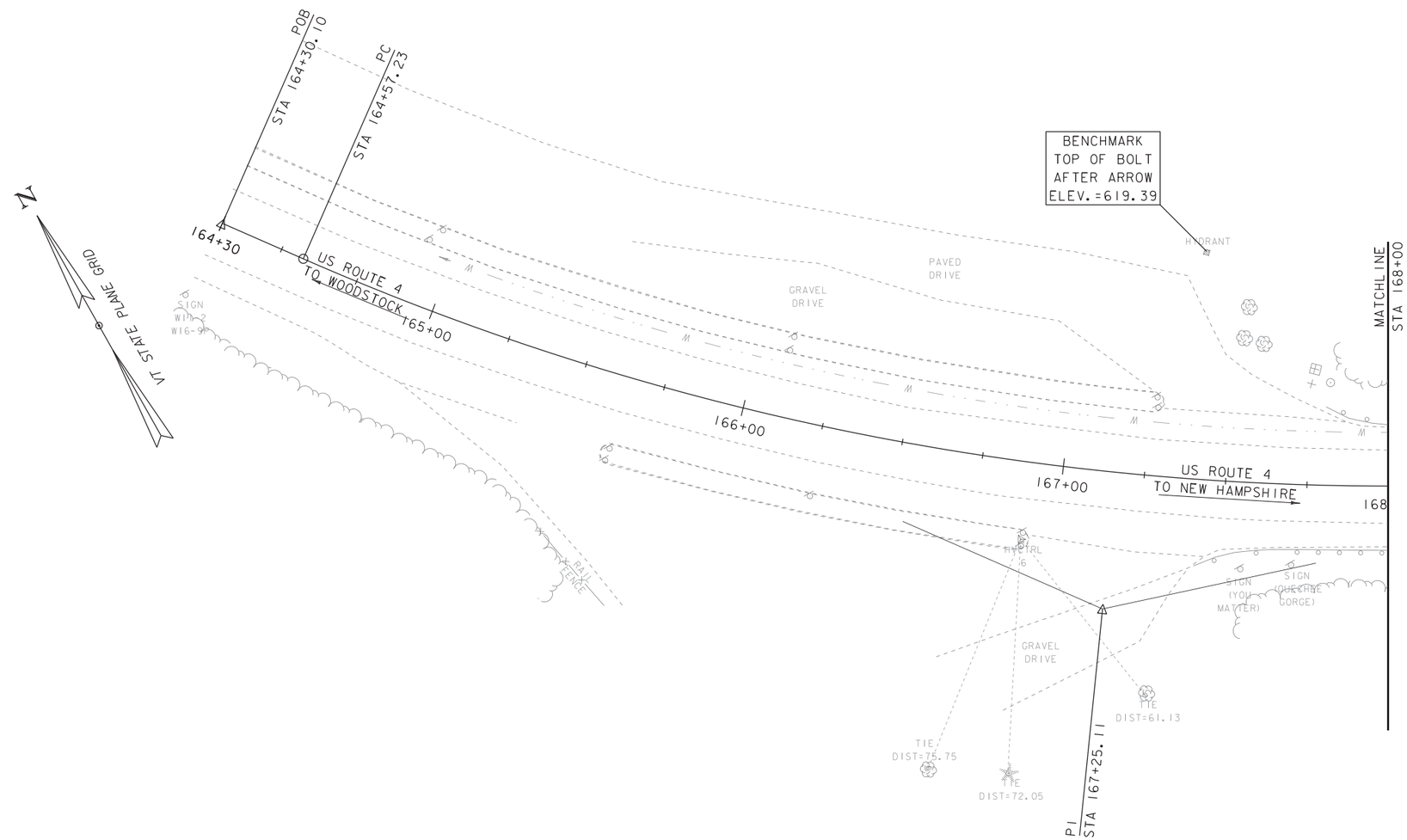

EXISTING CURVE 1

DELTA = 35°46′30″
D = 6°54′11″
R = 830.00′
T = 267.88′
L = 518.24′
E = 42.16′

LAYOUT

SCALE 1" = 20′-0"

20 0 20

PROJECT NAME: HARTFORD (QUECHEE)	
PROJECT NUMBER: NH 020-2(45)	
FILE NAME: 17b082/sl7b082border.dgn	PLOT DATE: 19-JAN-2018
PROJECT LEADER: J.B.MCCARTHY	DRAWN BY: D.D.BEARD
DESIGNED BY: ------	CHECKED BY: ------
LAYOUT SHEET 1 OF 3	SHEET 9 OF 17

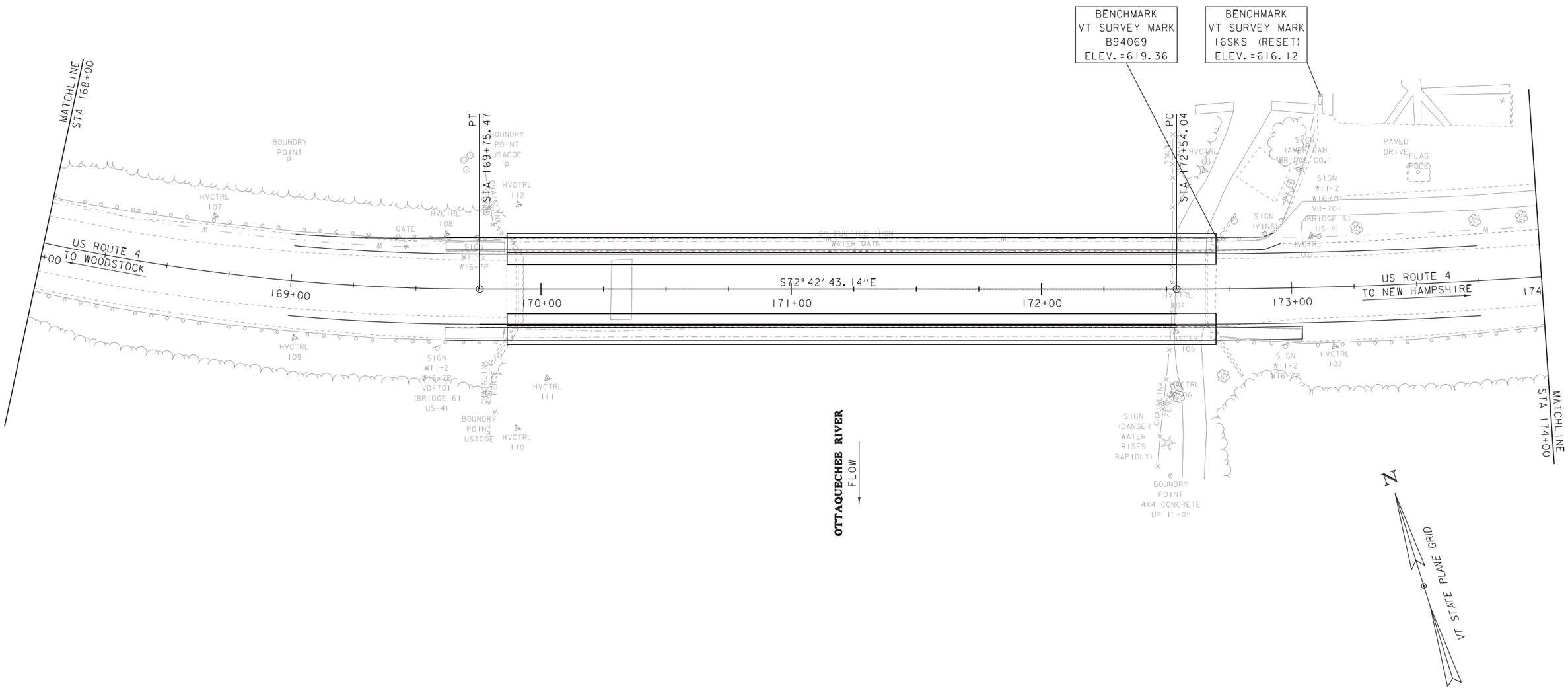

EXISTING BRIDGE INFORMATION
3 HINGE STEEL DECK ARCH
BUILT 1911, RECONSTRUCTED 1989
STRUCTURE LENGTH = 285'
MAXIMUM SPAN LENGTH = 188'

LAYOUT

SCALE 1" = 20'-0"
20 0 20

PROJECT NAME: HARTFORD (QUECHEE)	
PROJECT NUMBER: NH 020-2(45)	
FILE NAME: 17b082/sl7b082border.dgn	PLOT DATE: 19-JAN-2018
PROJECT LEADER: J.B.MCCARTHY	DRAWN BY: D.D.BEARD
DESIGNED BY: ------	CHECKED BY: ------
LAYOUT SHEET 2 OF 3	SHEET 10 OF 17

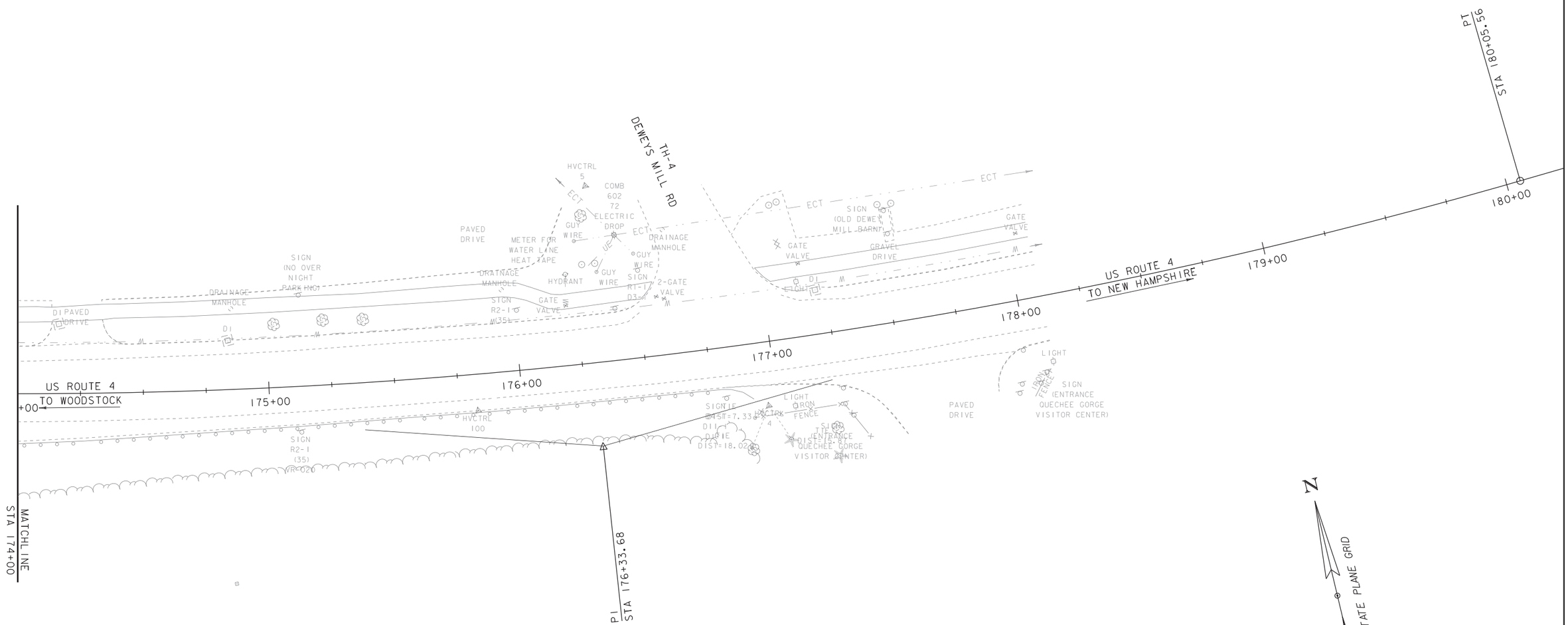

EXISTING CURVE 2

DELTA = 20°01'39"
D = 2°39'54"
R = 2150.00'
T = 379.63'
L = 751.52'
E = 33.26'

LAYOUT

SCALE 1" = 20'-0"
20 0 20

PROJECT NAME: HARTFORD (QUECHEE)	
PROJECT NUMBER: NH 020-2(45)	
FILE NAME: 17b082/sl7b082border.dgn	PLOT DATE: 19-JAN-2018
PROJECT LEADER: J.B.MCCARTHY	DRAWN BY: D.D.BEARD
DESIGNED BY: ------	CHECKED BY: ------
LAYOUT SHEET 3 OF 3	SHEET 11 OF 17

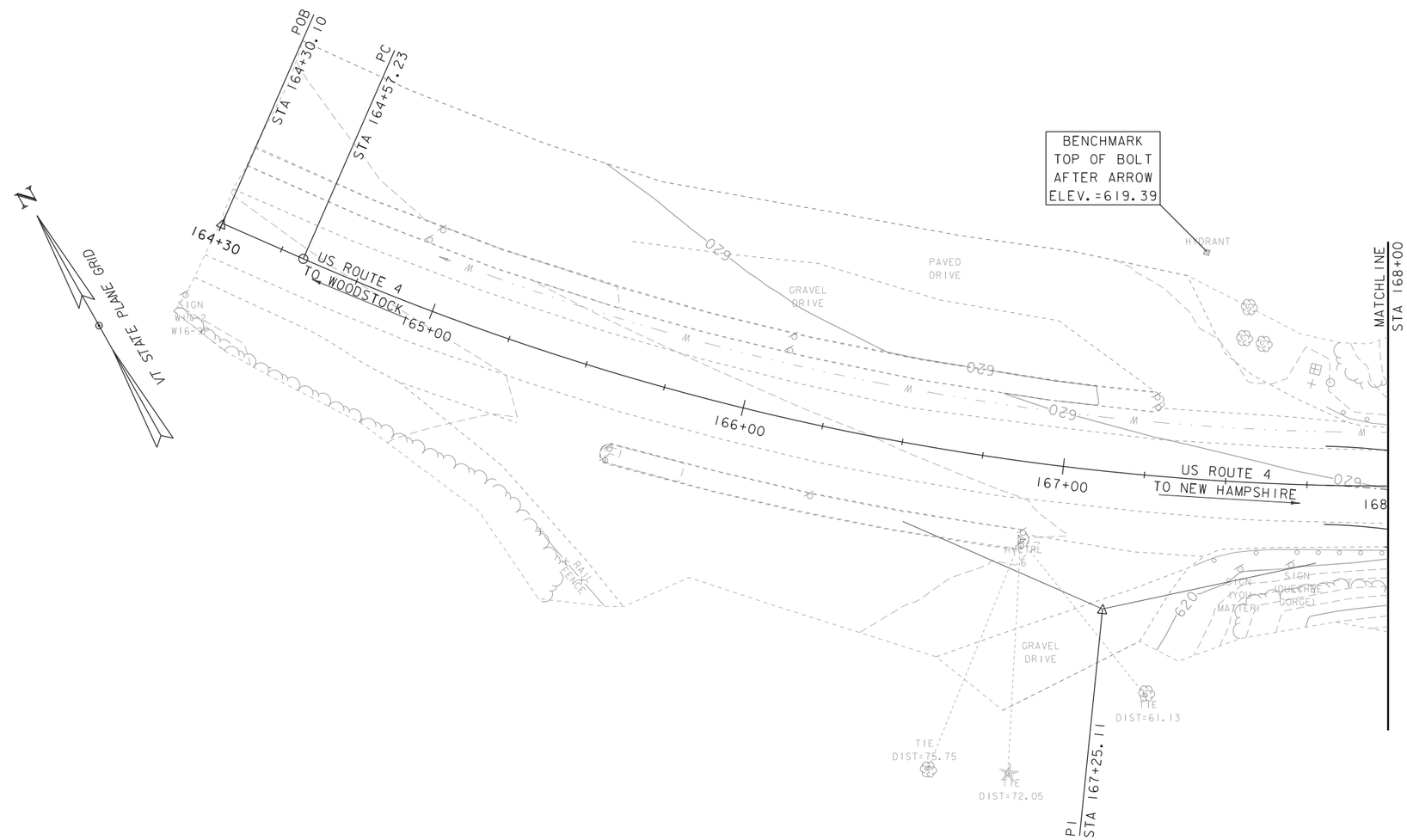

EXISTING CURVE 1

DELTA = 35°46′30″
D = 6°54′11″
R = 830.00′
T = 267.88′
L = 518.24′
E = 42.16′

TEMPORARY BRIDGE LAYOUT

SCALE 1" = 20′-0"

20 0 20

PROJECT NAME: HARTFORD (QUECHEE)	
PROJECT NUMBER: NH 020-2(45)	
FILE NAME: 17b082/sl7b082border.dgn	PLOT DATE: 19-JAN-2018
PROJECT LEADER: J.B.MCCARTHY	DRAWN BY: D.D.BEARD
DESIGNED BY: ------	CHECKED BY: ------
TEMPORARY BRIDGE SHEET 1 OF 3	SHEET 12 OF 17

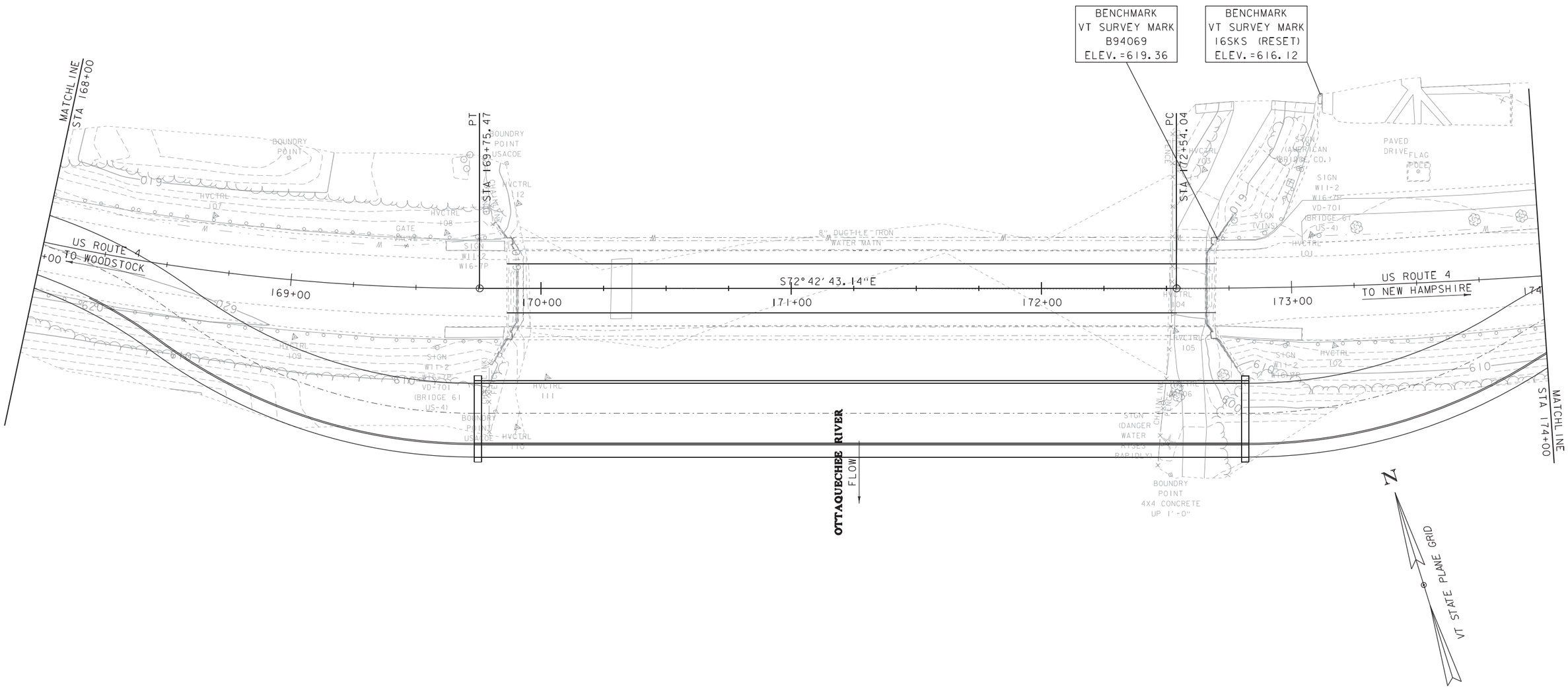

EXISTING BRIDGE INFORMATION
3 HINGE STEEL DECK ARCH
BUILT 1911, RECONSTRUCTED 1989
STRUCTURE LENGTH = 285'
MAXIMUM SPAN LENGTH = 188'

TEMPORARY BRIDGE LAYOUT

SCALE 1" = 20'-0"
20 0 20

PROJECT NAME: HARTFORD (QUECHEE)	
PROJECT NUMBER: NH 020-2(45)	
FILE NAME: 17b082/sl7b082border.dgn	PLOT DATE: 19-JAN-2018
PROJECT LEADER: J.B.MCCARTHY	DRAWN BY: D.D.BEARD
DESIGNED BY: ------	CHECKED BY: ------
TEMPORARY BRIDGE SHEET 2 OF 3	SHEET 13 OF 17

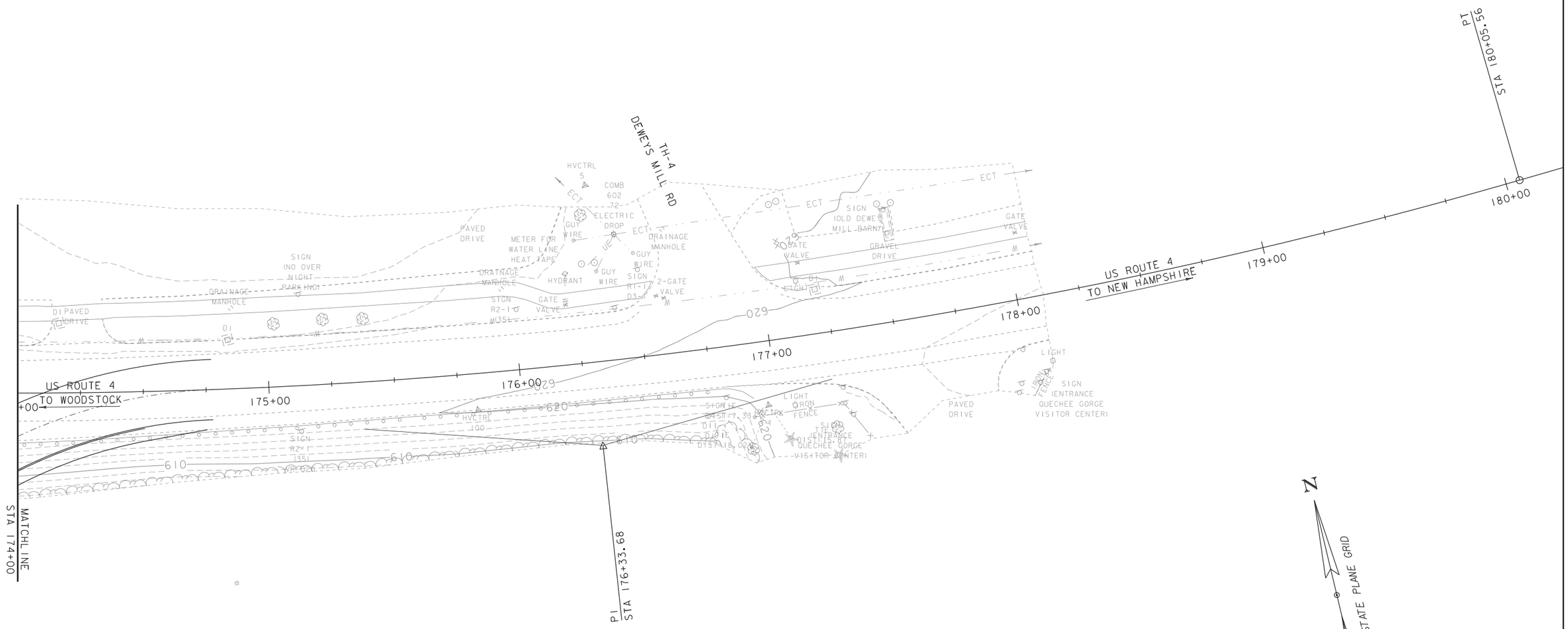

EXISTING CURVE 2

DELTA = 20°01'39"
D = 2°39'54"
R = 2150.00'
T = 379.63'
L = 751.52'
E = 33.26'

TEMPORARY BRIDGE LAYOUT

SCALE 1" = 20'-0"
20 0 20

PROJECT NAME: HARTFORD (QUECHEE)	
PROJECT NUMBER: NH 020-2(45)	
FILE NAME: 17b082/s17b082border.dgn	PLOT DATE: 19-JAN-2018
PROJECT LEADER: J.B.MCCARTHY	DRAWN BY: D.D.BEARD
DESIGNED BY: ------	CHECKED BY: ------
TEMPORARY BRIDGE SHEET 3 OF 3	SHEET 14 OF 17

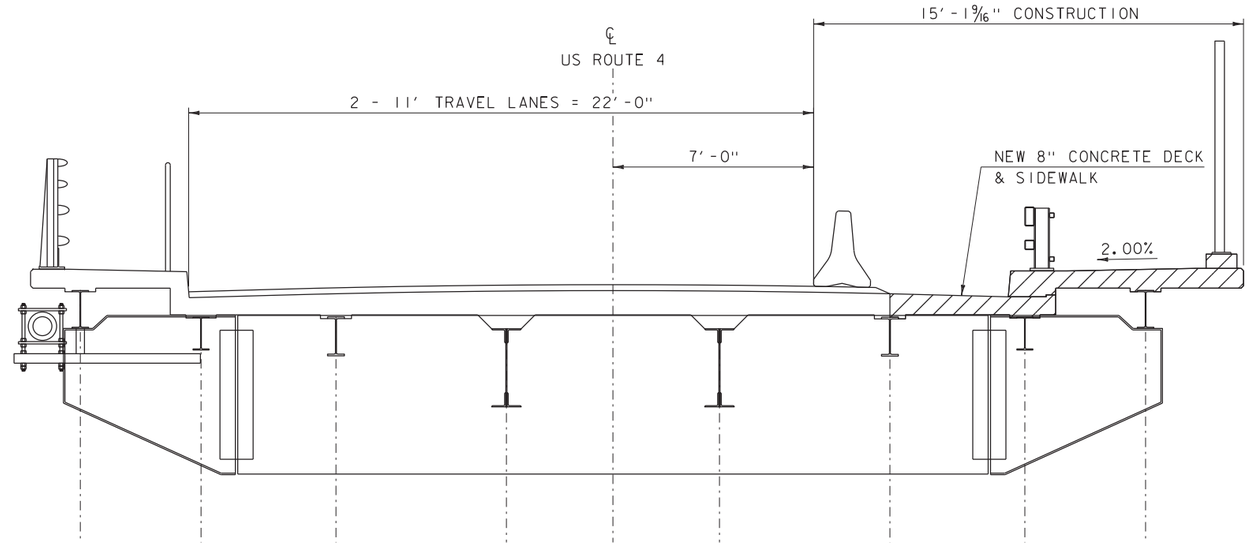

BRIDGE 61 PHASE 1

SCALE 3/8" = 1'-0"

FLOW

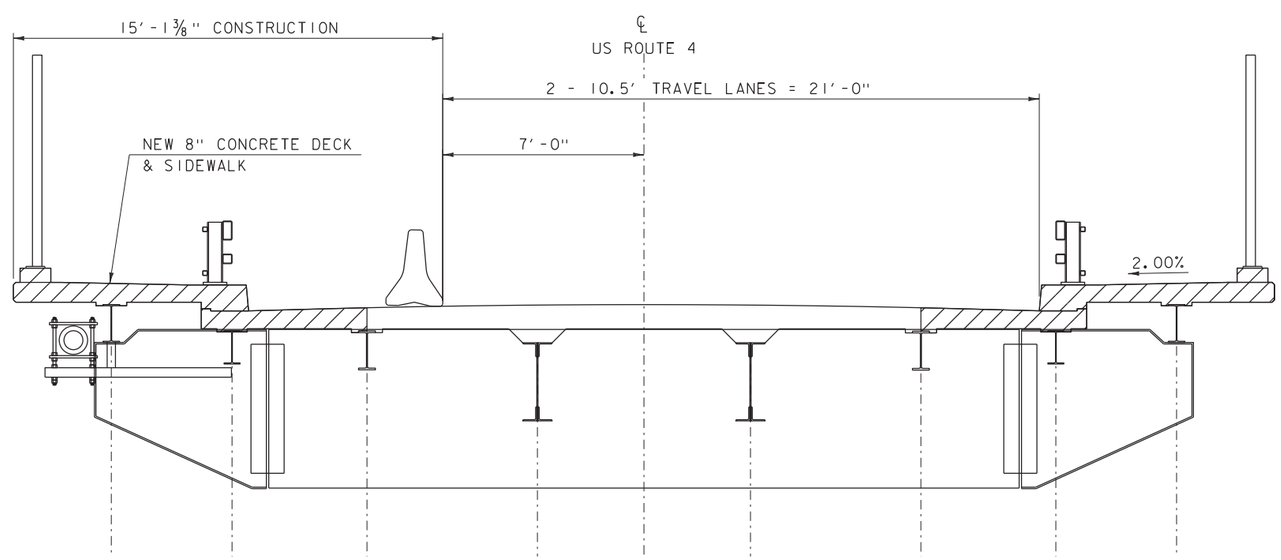

BRIDGE 61 PHASE 2

SCALE 3/8" = 1'-0"

FLOW

PROJECT NAME: HARTFORD (QUECHEE)	
PROJECT NUMBER: NH 020-2(45)	
FILE NAME: 17b082/sl7b082phasing.dgn	PLOT DATE: 19-JAN-2018
PROJECT LEADER: J.B.MCCARTHY	DRAWN BY: D.D.BEARD
DESIGNED BY: L.J.STONE	CHECKED BY: L.J.STONE
PHASING TYPICAL SECTION	SHEET 15 OF 17

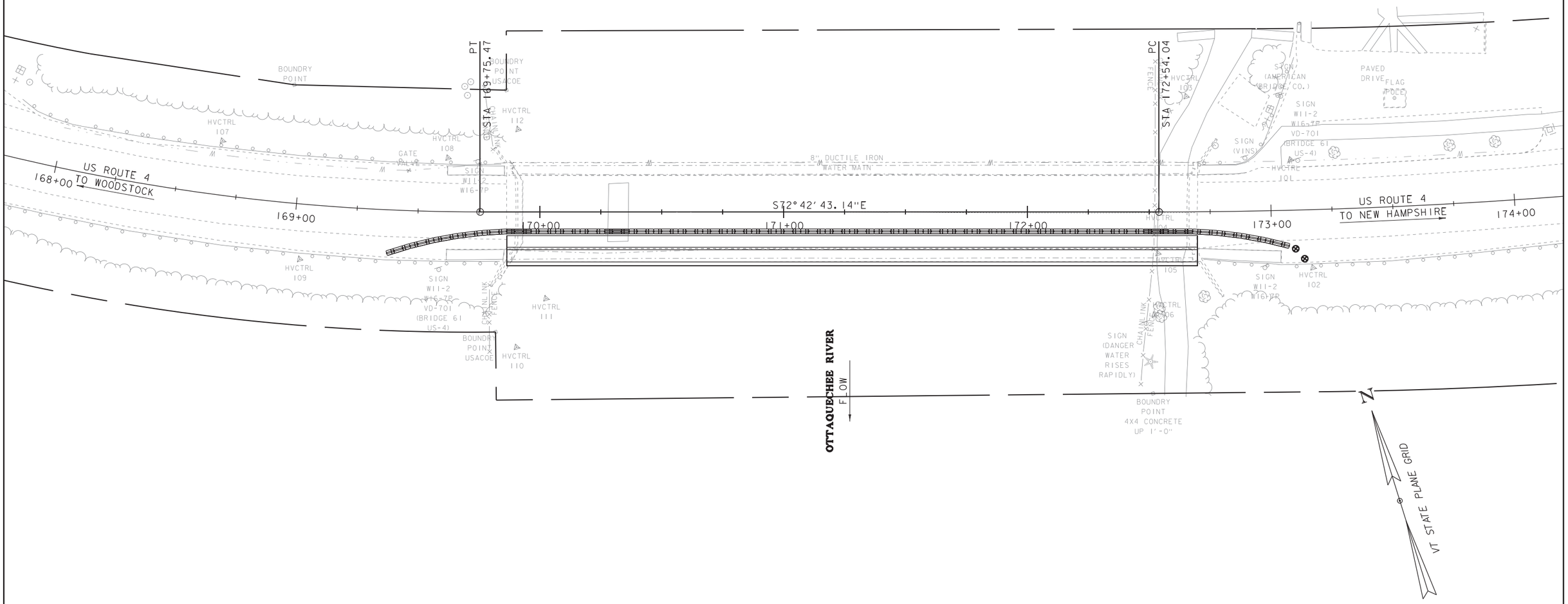

PHASE I LAYOUT

SCALE 1" = 20'-0"

20 0 20

PROJECT NAME:	HARTFORD (QUECHEE)
PROJECT NUMBER:	NH 020-2(45)

FILE NAME: 17b082/sl7b082border.dgn	PLOT DATE: 19-JAN-2018
PROJECT LEADER: J.B.MCCARTHY	DRAWN BY: D.D.BEARD
DESIGNED BY: L.J.STONE	CHECKED BY: L.J.STONE
PHASE I LAYOUT	SHEET 16 OF 17

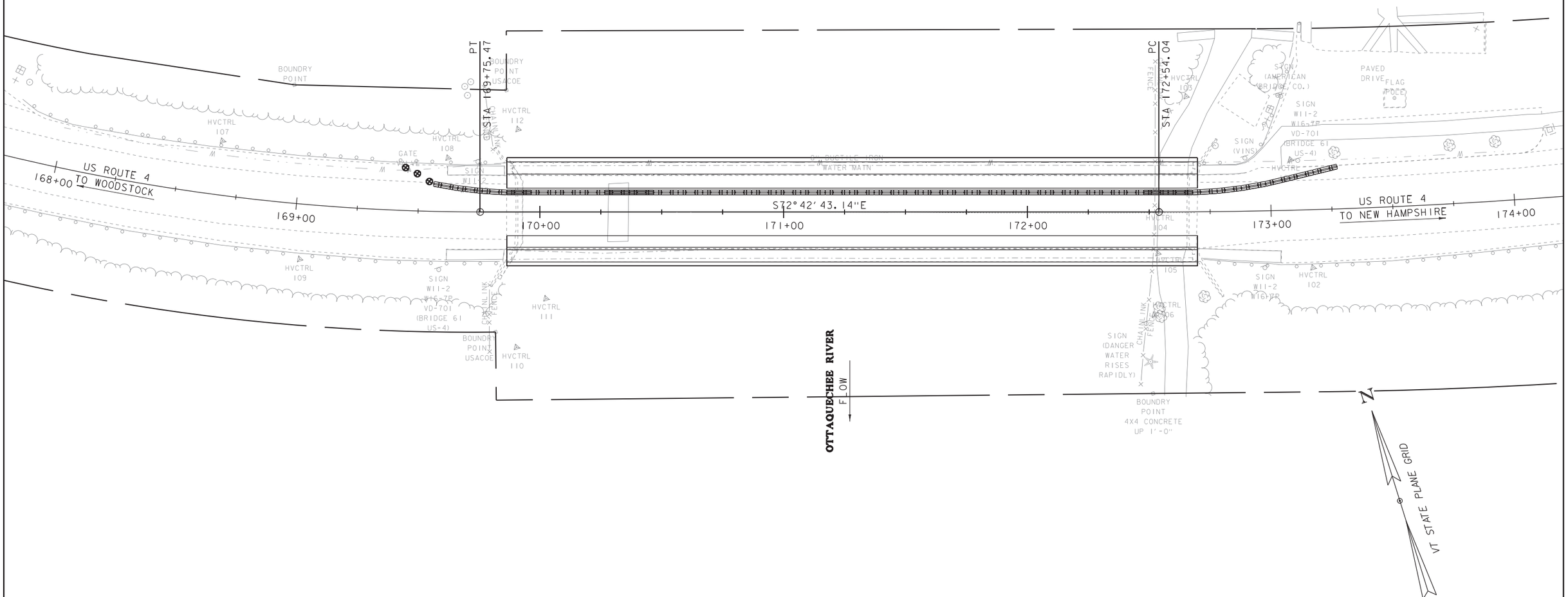

PHASE 2 LAYOUT

SCALE 1" = 20'-0"

20 0 20

PROJECT NAME:	HARTFORD (QUECHEE)
PROJECT NUMBER:	NH 020-2(45)

FILE NAME: 17b082/sl7b082border.dgn	PLOT DATE: 19-JAN-2018
PROJECT LEADER: J.B.MCCARTHY	DRAWN BY: D.D.BEARD
DESIGNED BY: L.J.STONE	CHECKED BY: L.J.STONE
PHASE 2 LAYOUT	SHEET 17 OF 17